11000 ALUTHERM Plus

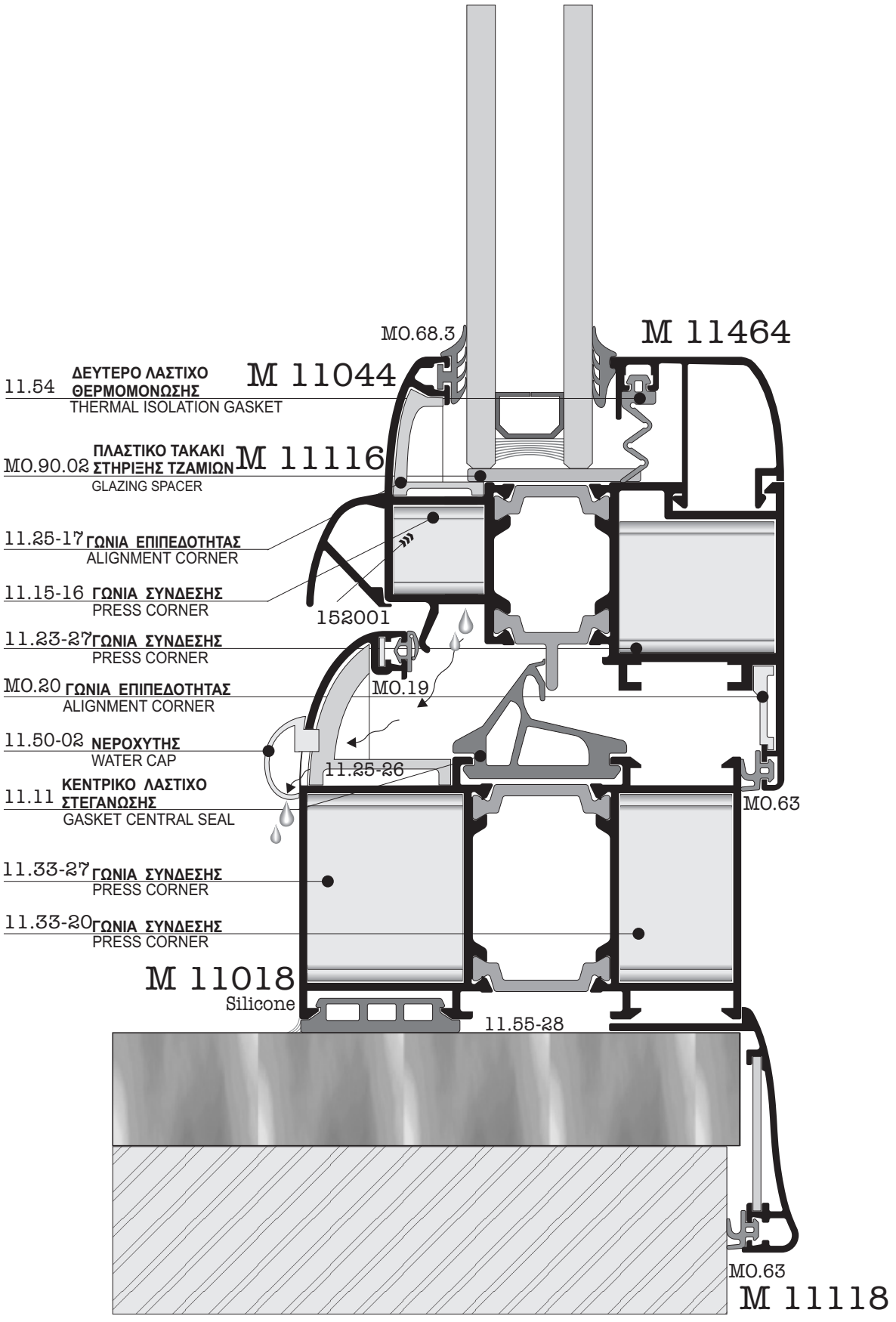
MO.68.3
M 11464
11.54 ΔΕΥΤΕΡΟ ΛΑΣΤΙΧΟ ΘΕΡΜΟΜΟΝΩΣΗΣ
THERMAL ISOLATION GASKET
M 11044
MO.90.02 ΠΛΑΣΤΙΚΟ ΤΑΚΑΚΙ ΣΤΗΡΙΞΗΣ ΤΖΑΜΙΩΝ
GLAZING SPACER
M 11116
11.25-17 ΓΩΝΙΑ ΕΠΙΠΕΔΟΤΗΤΑΣ
ALIGNMENT CORNER
11.15-16 ΓΩΝΙΑ ΣΥΝΔΕΣΗΣ
PRESS CORNER
152001
11.23-27 ΓΩΝΙΑ ΣΥΝΔΕΣΗΣ
PRESS CORNER
MO.20 ΓΩΝΙΑ ΕΠΙΠΕΔΟΤΗΤΑΣ
ALIGNMENT CORNER
MO.19
11.50-02 ΝΕΡΟΧΥΤΗΣ
WATER CAP
11.25-26
11.11 ΚΕΝΤΡΙΚΟ ΛΑΣΤΙΧΟ ΣΤΕΓΑΝΩΣΗΣ
GASKET CENTRAL SEAL
MO.63
11.33-27 ΓΩΝΙΑ ΣΥΝΔΕΣΗΣ
PRESS CORNER
11.33-20 ΓΩΝΙΑ ΣΥΝΔΕΣΗΣ
PRESS CORNER
M 11018
Silicone
11.55-28
MO.63
M 11118

PROFILE	Profile Number Weight (gr/m)	X mm Y mm	I cm^4 J cm^4
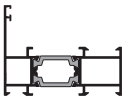	M 11008 1133	62,50 48,00	4,91 18,37
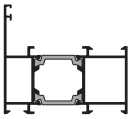	M 11010 1300	62,50 58,00	10,17 21,58
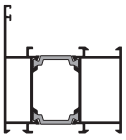	M 11014 1462	62,50 68,00	18,22 24,75
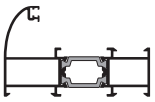	M 11026 1307	77,40 48,00	7,00 29,76
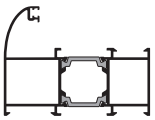	M 11016 1474	77,40 58,00	13,35 34,45
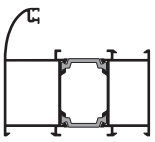	M 11018 1636	77,40 68,00	22,81 39,10
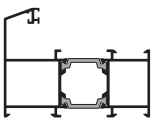	M 11020 1495	77,40 58,00	14,17 35,54
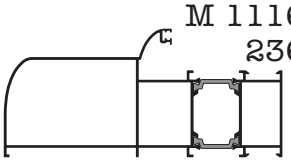	M 11168 2363	147,40 68,00	34,73 178,51
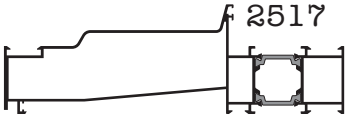	M 11149 2517	180,00 58,00	21,81 324,63
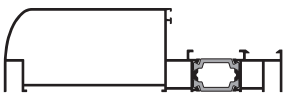	M 11080 2273	147,40 44,50	14,84 159,53

PROFILE	Profile Number Weight (gr/m)	X mm Y mm	I cm^4 J cm^4
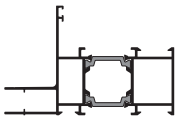	M 11205 1524	89,90 58,00	11,62 34,38
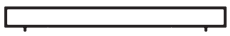	M 9381 1036	117,60 13,30	0,88 50,38
	M 9379 1446	117,60 42,40	11,21 78,36
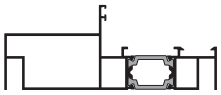	M 11076 1623	112,50 45,00	7,35 71,60
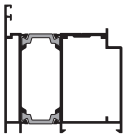	M 11086 1656	62,50 68,00	24,02 28,91
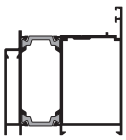	M 11088 1629	62,50 68,00	22,22 31,52
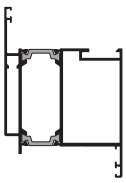	M 11082 1799	62,50 90,40	24,89 41,88
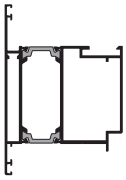	M 11084 1816	62,50 90,40	30,23 34,70
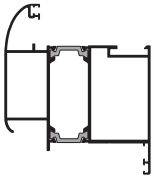	M 11134 1986	77,40 90,40	30,08 56,83
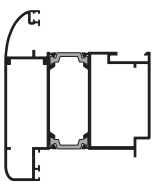	M 11138 2096	77,40 90,40	46,38 48,06

PROFILE	Profile Number Weight (gr/m)	X mm Y mm	I cm^4 J cm^4
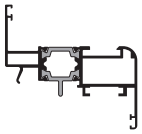	M 11030 1387	70,00 66,00	5,05 30,59
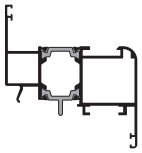	M 11034 1600	70,00 76,00	10,27 35,60
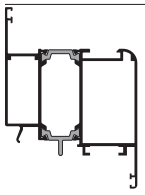	M 11038 1919	70,00 96,00	26,32 51,30
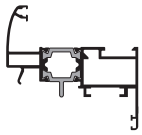	M 11040 1424	70,00 66,00	5,58 31,17
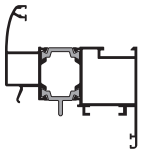	M 11044 1578	70,00 76,00	10,90 36,46
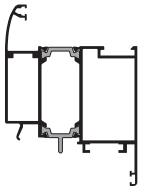	M 11048 1979	70,00 96,00	26,53 53,40
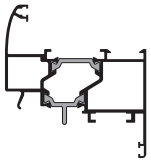	M 11244 1559	70,00 76,00	9,98 36,16
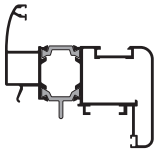	M 11216 1754	78,70 76,00	13,26 50,19
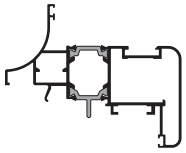	M 11217 1825	93,40 76,00	13,74 53,44
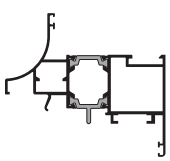	M 11050 1649	84,90 76,00	11,30 39,19

PROFILE	Profile Number Weight (gr/m)	X mm Y mm	I cm^4 J cm^4
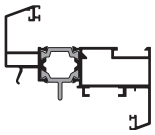	M 11320 1592	77,40 66,00	7,18 41,67
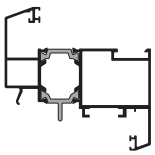	M 11324 1746	77,40 76,00	13,45 51,86
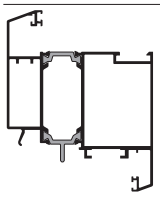	M 11328 2096	77,40 96,00	31,41 72,44
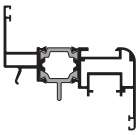	M 11350 1413	70,00 66,00	4,70 30,40
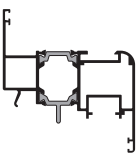	M 11354 1586	70,00 76,00	9,98 35,69
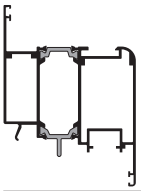	M 11358 1964	70,00 96,00	26,22 50,79
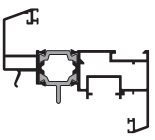	M 11330 1585	77,40 66,00	7,08 40,98
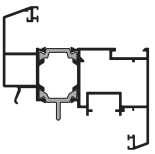	M 11334 1756	77,40 76,00	13,29 47,91
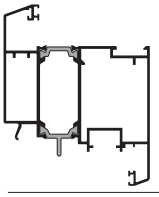	M 11338 2110	77,40 96,00	32,27 70,46
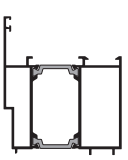	M 11144 1588	62,50 73,40	21,57 31,48

PROFILE	Profile Number Weight (gr/m)	X mm Y mm	I cm^4 J cm^4
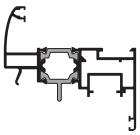	M 11340 1444	70,00 66,00	8,10 27,97
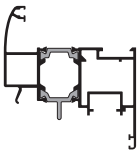	M 11344 1614	70,00 76,00	15,03 31,99
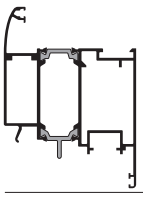	M 11348 2016	70,00 96,00	39,95 41,31
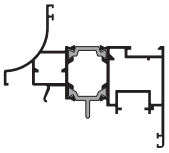	M 11370 1685	85,00 76,00	13,66 36,60
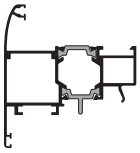	M 11130 1622	70,00 76,00	11,24 36,83
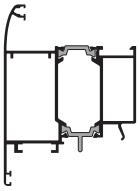	M 11190 1923	70,00 96,00	40,00 39,39
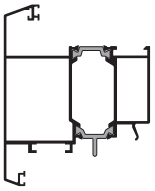	M 11390 2084	77,40 96,00	47,19 51,14
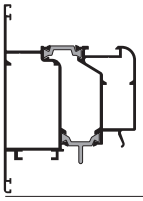	M 11393 2030	70,00 100,00	44,55 41,13
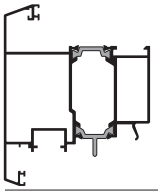	M 11391 2079	77,40 96,00	46,49 51,23
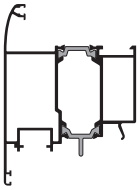	M 11392 1940	70,00 96,00	38,73 39,18

PROFILE	Profile Number Weight (gr/m)	X mm Y mm	I cm^4 J cm^4
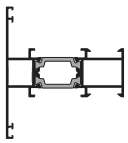	M 11062 1224	62,50 70,00	7,72 20,70
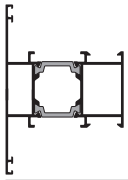	M 11064 1392	62,50 80,00	14,03 23,95
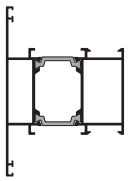	M 11066 1545	62,50 90,00	23,31 27,16
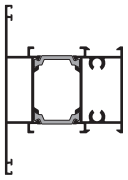	M 11266 1678	62,50 90,00	24,28 29,50
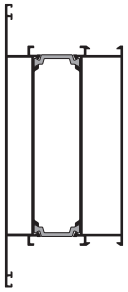	M 11068 2649	62,50 150,00	160,81 47,47
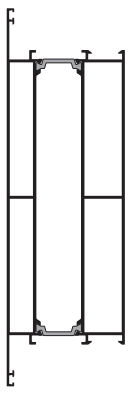	M 11070 3802	62,50 200,00	430,10 71,29
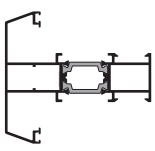	M 11362 1522	77,40 70,00	12,58 35,30
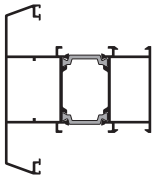	M 11366 1866	77,40 90,00	32,72 45,03

PROFILE	Profile Number Weight (gr/m)	X mm Y mm	I cm^4 J cm^4
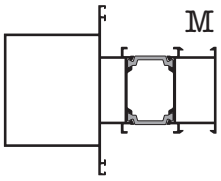	M 11074 2148	112,50 90,00	37,53 92,90
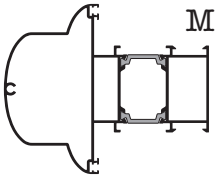	M 11188 2245	108,50 90,00	43,01 84,65
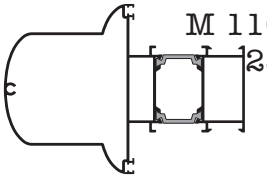	M 11078 2399	127,50 90,00	47,81 125,99
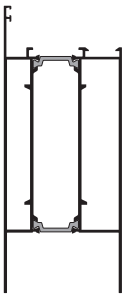	M 11142 2827	62,50 152,00	156,44 55,23
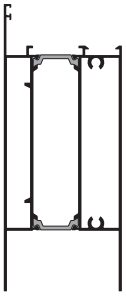	M 11242 2957	62,50 152,00	181,56 58,63
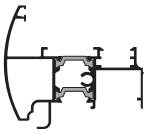	M 11258 1430	73,85 65,40	10,50 25,56
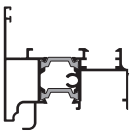	M 11058 1363	66,35 65,40	9,36 20,85
	M 11164 310	36,00 14,50	0,13 1,14

PROFILE	Profile Number Weight (gr/m)	X mm Y mm	I cm^4 J cm^4
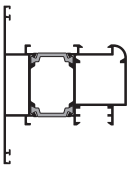	M 11148 1671	70,00 90,00	23,75 34,54
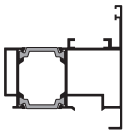	M 11152 1345	62,50 65,80	12,11 24,65
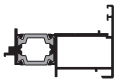	M 11158 1018	58,30 39,00	2,93 16,02
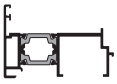	M 11156 993	58,30 39,00	2,88 13,70
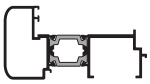	M 11198 1160	75,80 39,00	4,78 21,48
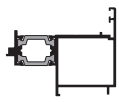	M 11162 1073	58,30 47,00	5,03 16,15
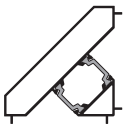	M 11090 1347	62,50 62,50	23,72 12,50
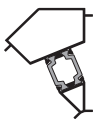	M 11092 991	47,00 58,80	5,01 12,70
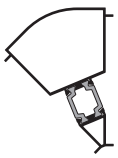	M 11094 1141	58,00 77,40	9,16 24,18
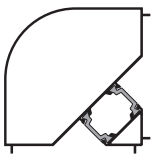	M 11096 1619	77,40 77,40	43,90 45,91

PROFILE	Profile Number Weight (gr/m)	X mm Y mm	I cm^4 J cm^4
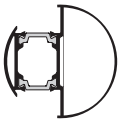	M 11178 1251	60,00 60,00	12,77 15,02
	M 11181 192	25,10 16,20	0,10 0,40
	M 11180 182	19,00 16,20	0,10 0,10
	M 11182 272	33,90 24,50	1,20 0,44
	M 11113 592	45,00 27,40	2,04 1,66
	M 11115 338	43,35 8,00	0,04 2,02
	M 11114 249	45,00 14,00	0,15 4,05
	M 11170 877	59,80 21,80	1,27 12,58
	M 11270 977	67,30 32,80	2,53 18,26
	M 11174 979	49,20 23,90	2,63 9,63
	M 11172 436	49,20 10,00	0,11 3,60
	M 11274 815	55,00 18,50	0,93 8,88
	M 11218 345	53,80 20,40	4,10 0,27

PROFILE	Profile Number Weight (gr/m)	X mm Y mm	I cm^4 J cm^4
	M 11118 324	33,20 43,00	2,79 0,82
	M 11119 379	38,20 43,00	3,28 1,11
	M 216 348	14,00 50,00	3,84 0,24
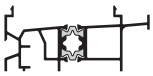	M 11474 1245	76,90 34,90	3,27 20,47
	M 11475 373	40,60 39,10	1,37 3,01
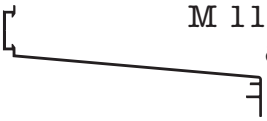	M 11477 818	137,00 59,15	3,87 81,99
	M 11473 103	10,00 16,50	0,06 0,03
	M 11480 282	24,60 26,80	0,06 0,03
	M 11501 1053	87,00 23,00	1,69 27,65
	M 11472 314	19,50 32,80	1,20 0,35
	M 11471 231	25,45 16,00	0,12 0,51
	M 11116 183	15,00 20,00	0,28 0,15
	M 9317 180	21,00 15,60	0,21 0,69

PROFILE	Profile Number Weight (gr/m)	X mm Y mm	I cm^4 J cm^4
	M 9313 175	2,50 26,60	0,42 0,54
	M 946 229	5,50 26,60	0,57 0,22
	M 9312 242	13,50 26,60	0,68 0,31
	M 11451 301	18,50 26,60	0,80 0,48
	M 11452 313	22,50 26,60	0,85 0,69
	M 11453 328	26,50 26,60	0,88 0,97
	M 11454 346	30,50 26,60	0,94 1,34

PROFILE	Profile Number Weight (gr/m)	X mm Y mm	I cm^4 J cm^4
	M 11462 297	22,50 26,60	0,79 0,59
	M 11463 311	26,50 26,60	0,89 1,18
	M 11464 330	30,50 26,60	0,89 1,18
	M 11120 427	46,50 26,60	1,07 3,39
	M 11121 418	46,50 26,60	1,07 3,28
	M 11226 227	26,60 19,80	0,25 0,48

M 11008

W=1133 gr/m

ΚΑΣΑ ΙΣΙΑ ΧΑΜΗΛΗ
FRAME SMALL FLAT

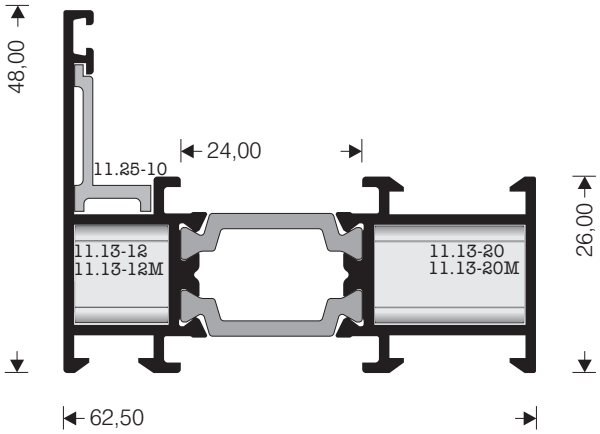

M 11010

W=1300 gr/m

ΚΑΣΑ ΙΣΙΑ ΜΕΣΑΙΑ
FRAME MEDIUM FLAT

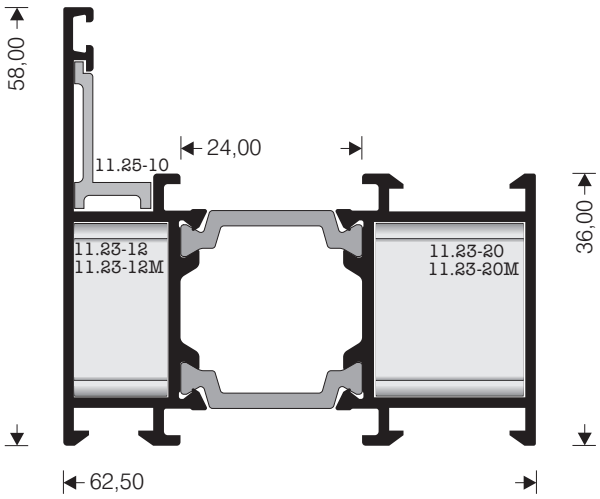

M 11014

W=1462 gr/m

ΚΑΣΑ ΙΣΙΑ ΨΗΛΗ
FRAME LARGE FLAT

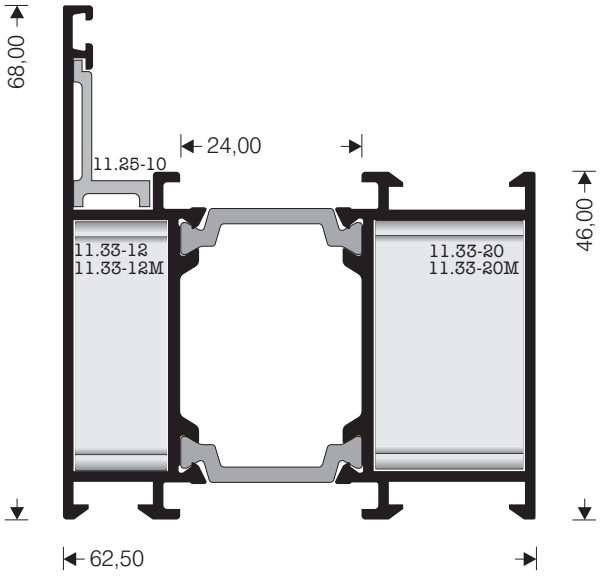

ΦΥΛΛΟ ΙΣΙΟ ΜΙΚΡΟ
SASH SMALL FLAT

# M 11030
W=1387 gr/m

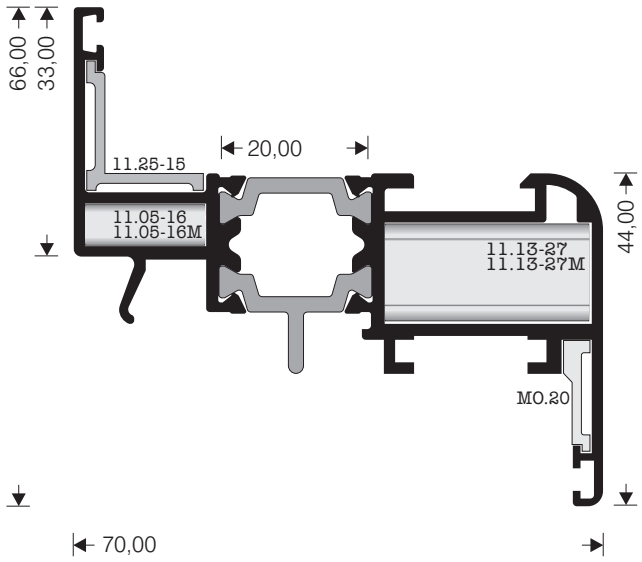

ΦΥΛΛΟ ΙΣΙΟ ΜΕΣΑΙΟ
SASH MEDIUM FLAT

# M 11034
W=1600 gr/m

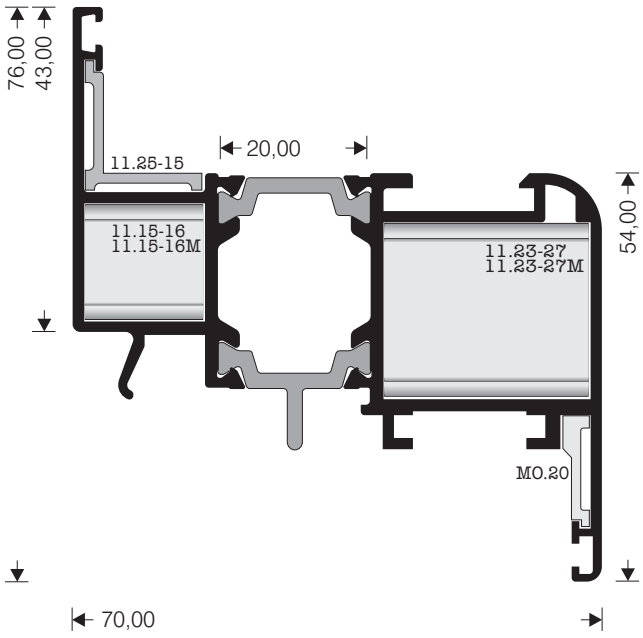

ΦΥΛΛΟ ΙΣΙΟ ΜΕΓΑΛΟ
SASH LARGE FLAT

# M 11038
W=1919 gr/m

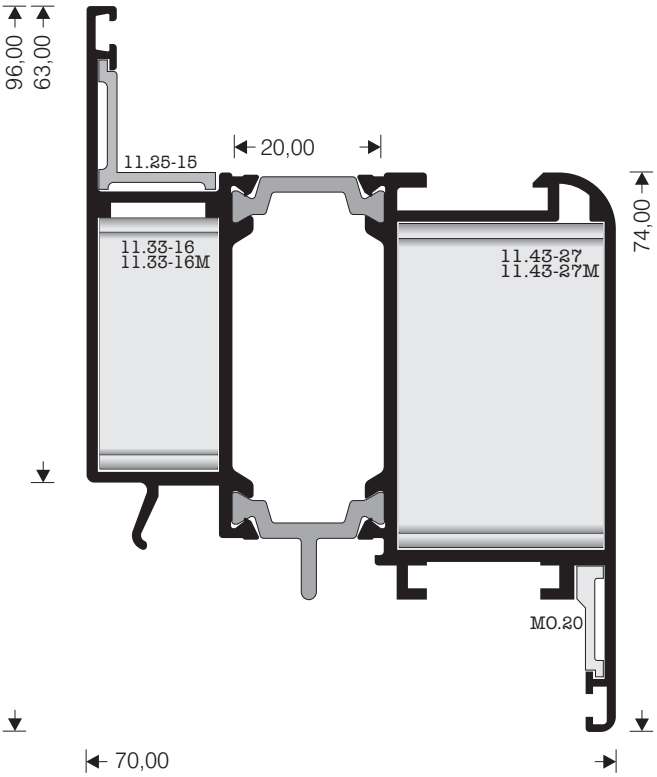

11..**** - Πρεσσαριστη γωνια **11.**.**M** - Μηχανικη γωνια
11..**** - Punching corner **11.**.**M** - Mechanical corner

M 11026

W=1307 gr/m

ΚΑΣΑ ΚΑΜΠΥΛΗ ΧΑΜΗΛΗ

FRAME SMALL ROUND

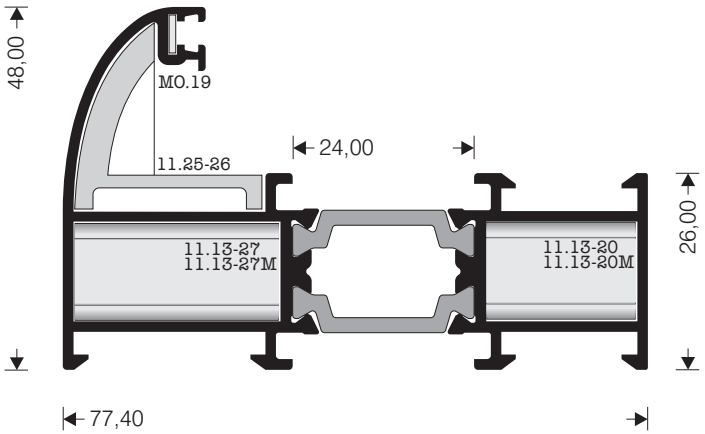

M 11016

W=1474 gr/m

ΚΑΣΑ ΚΑΜΠΥΛΗ ΜΕΣΑΙΑ

FRAME MEDIUM ROUND

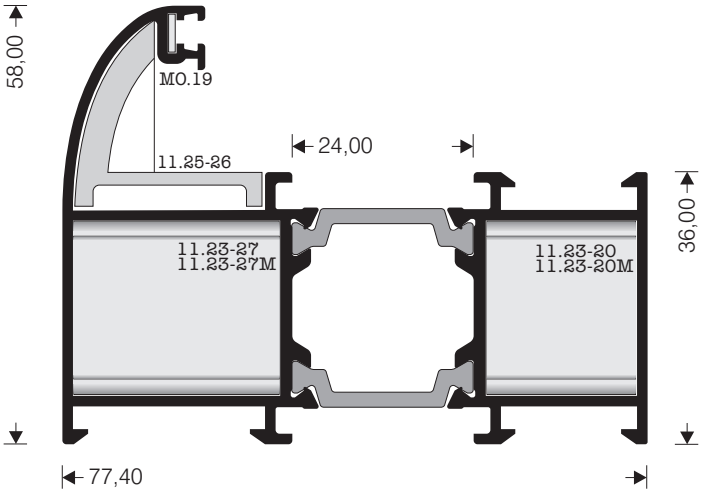

M 11018

W=1636 gr/m

ΚΑΣΑ ΚΑΜΠΥΛΗ ΨΗΛΗ

FRAME LARGE ROUND

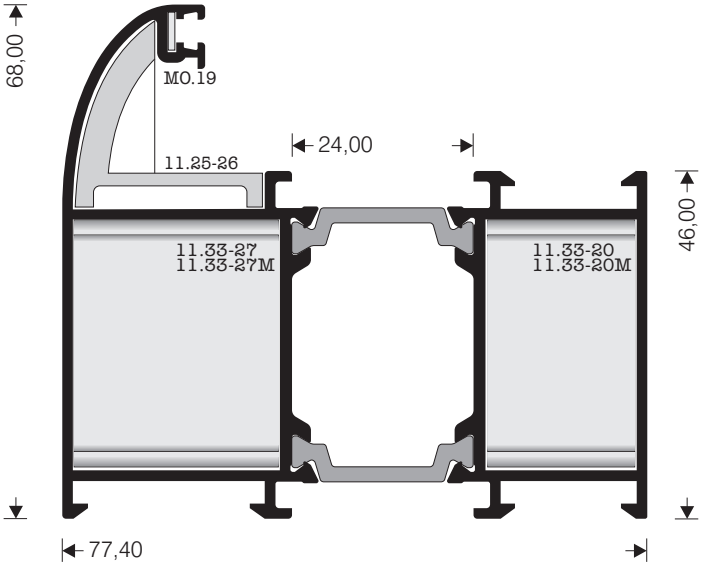

ΦΥΛΛΟ ΚΑΜΠΥΛΟ ΜΙΚΡΟ
SASH SMALL ROUND

# M 11040
W=1424 gr/m

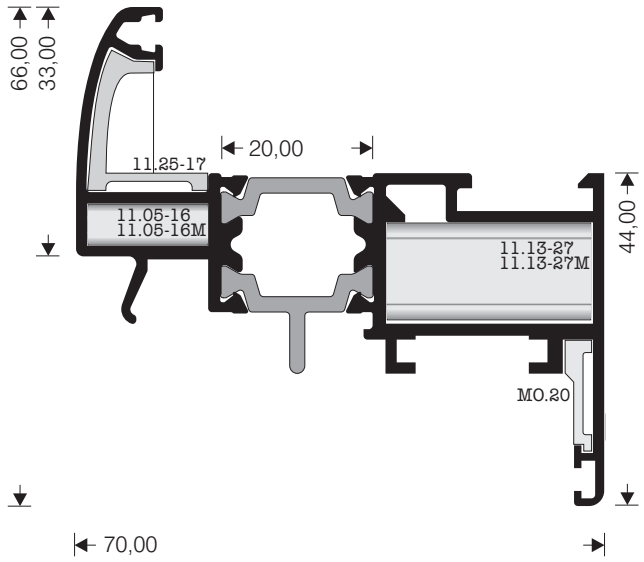

ΦΥΛΛΟ ΚΑΜΠΥΛΟ ΜΕΣΑΙΟ
SASH MEDIUM ROUND

# M 11044
W=1578 gr/m

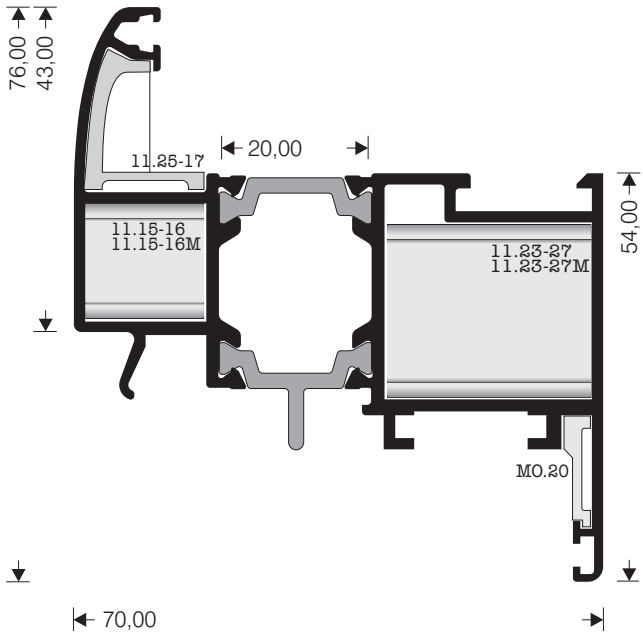

ΦΥΛΛΟ-ΚΑΣΑ ΚΑΜΠΥΛΗ
SASH-FRAME ROUND

# M 11244
W=1559 gr/m

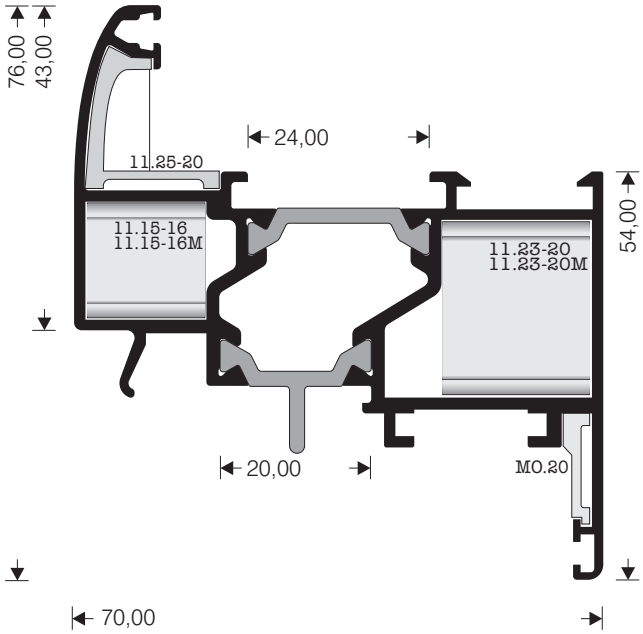

ΦΥΛΛΟ ΚΑΜΠΥΛΟ ΜΕΓΑΛΟ
SASH LARGE ROUND

# M 11048
W=1979 gr/m

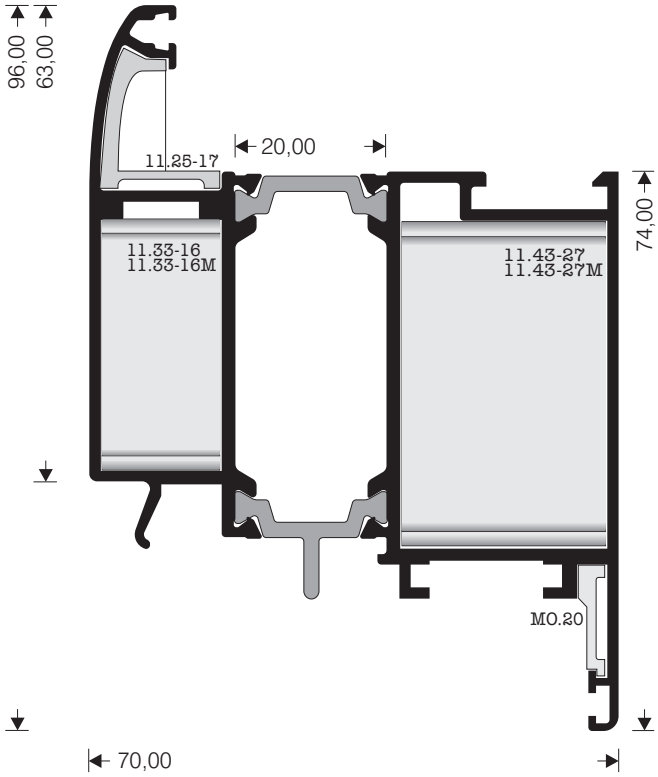

11..**** - Πρεσσαριστη γωνια **11.**.**M** - Μηχανικη γωνια
11..**** - Punching corner **11.**.**M** - Mechanical corner

M 11050

W=1649 gr/m

ΦΥΛΛΟ “CLASSIC”

SASH “CLASSIC”

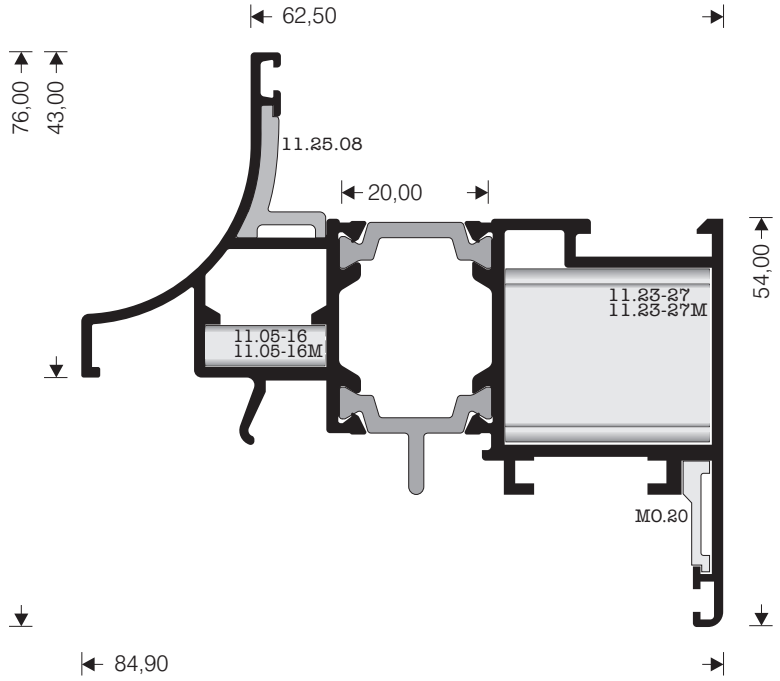

M 11020

W=1495 gr/m

ΚΑΣΑ “CLASSIC”

FRAME “CLASSIC”

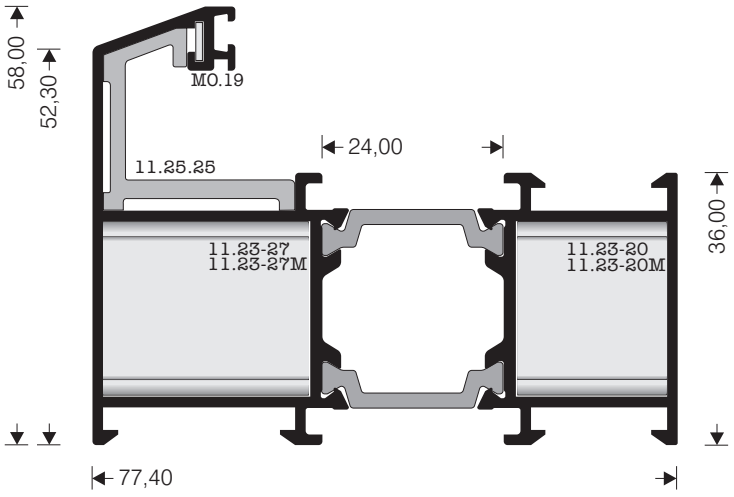

ΦΥΛΛΟ “CLASSIC”
SASH “CLASSIC”

M 11217

W=1825 gr/m

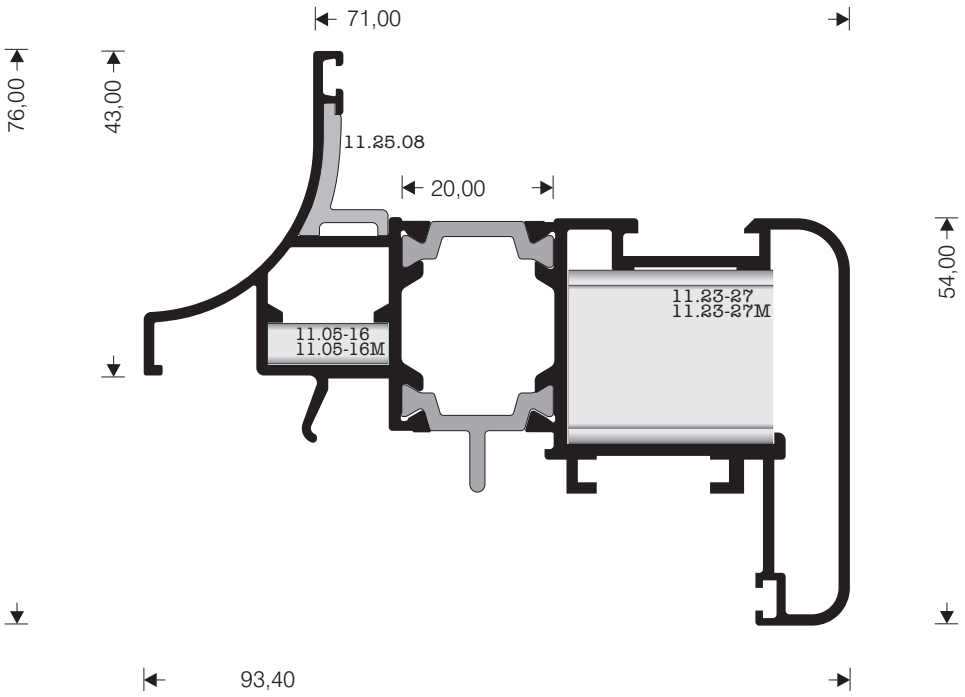

ΦΥΛΛΟ
SASH

M 11216

W=1754 gr/m

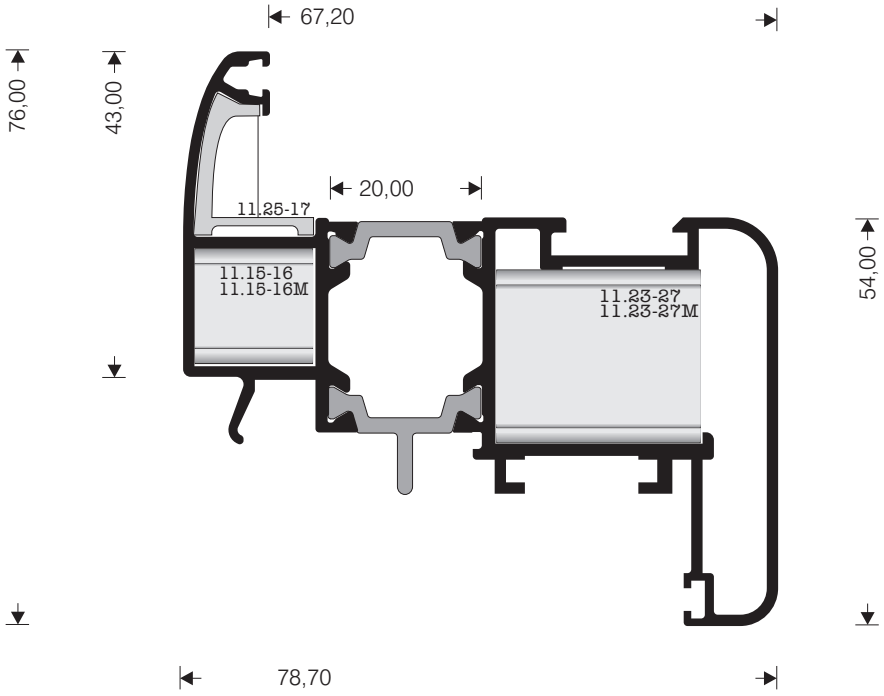

11..**** - Πρεσσαριστη γωνια **11.**.**M** - Μηχανικη γωνια
11..**** - Punching corner **11.**.**M** - Mechanical corner

M 11190

W=1923 gr/m

ΦΥΛΛΟ ΑΝΟΙΓΟΜΕΝΟ ΠΡΟΣ ΤΑ ΕΞΩ ΜΕΓΑΛΟ

SASH OPENING OUTSIDE LARGE

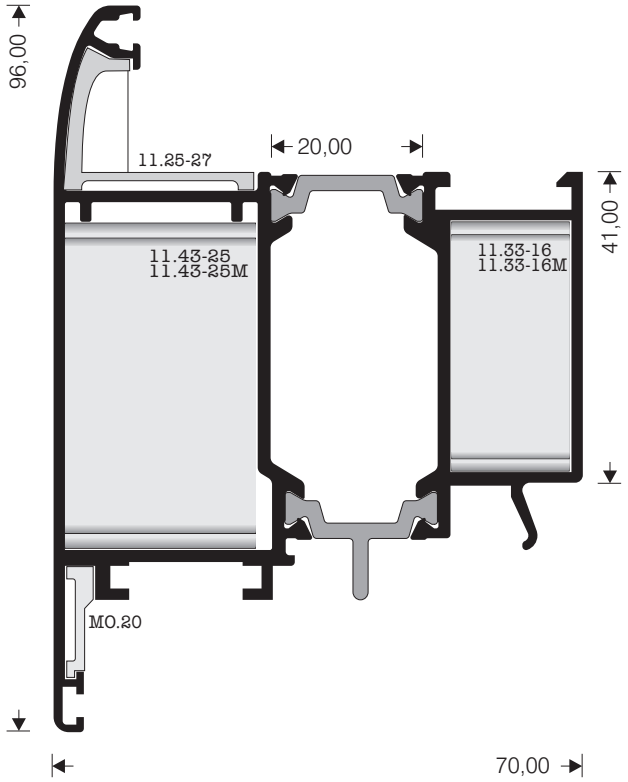

M 11130

W=1622 gr/m

ΦΥΛΛΟ ΑΝΟΙΓΟΜΕΝΟ ΠΡΟΣ ΤΑ ΕΞΩ ΜΙΚΡΟ

SASH OPENING OUTSIDE SMALL

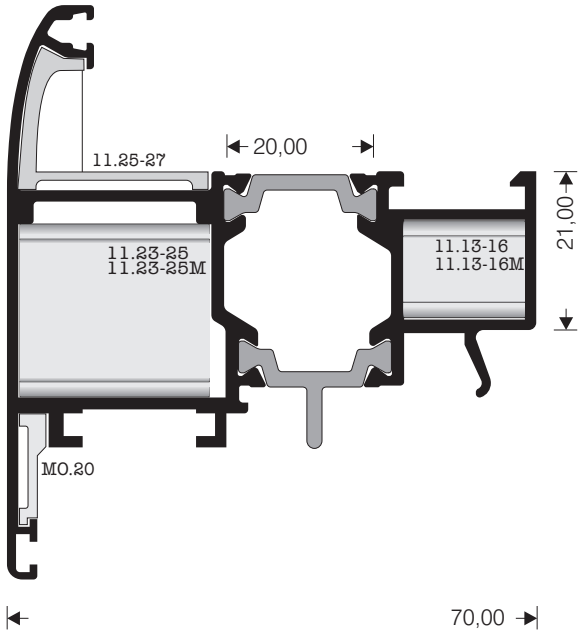

M 11058

W=1363 gr/m

ΜΠΙΝΙ ΙΣΙΟ

ADJOINING PROFILE FLAT

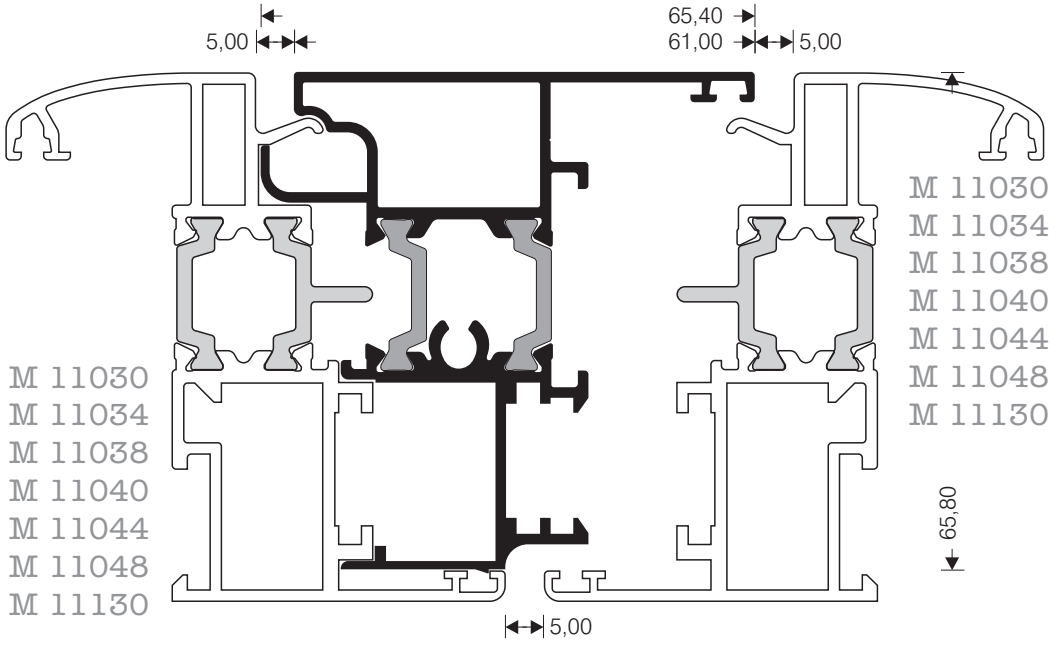

ΦΥΛΛΟ ΙΣΙΟ ΜΙΚΡΟ
SASH SMALL FLAT

# M 11350
W=1413 gr/m

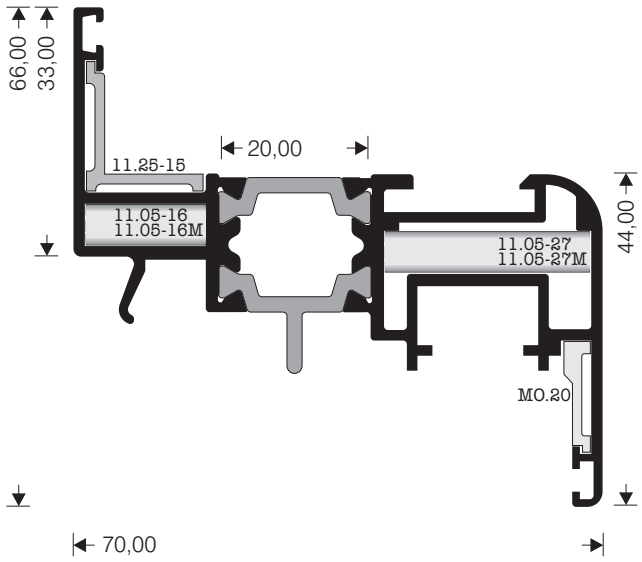

ΦΥΛΛΟ ΙΣΙΟ ΜΕΣΑΙΟ
SASH MEDIUM FLAT

# M 11354
W=1586 gr/m

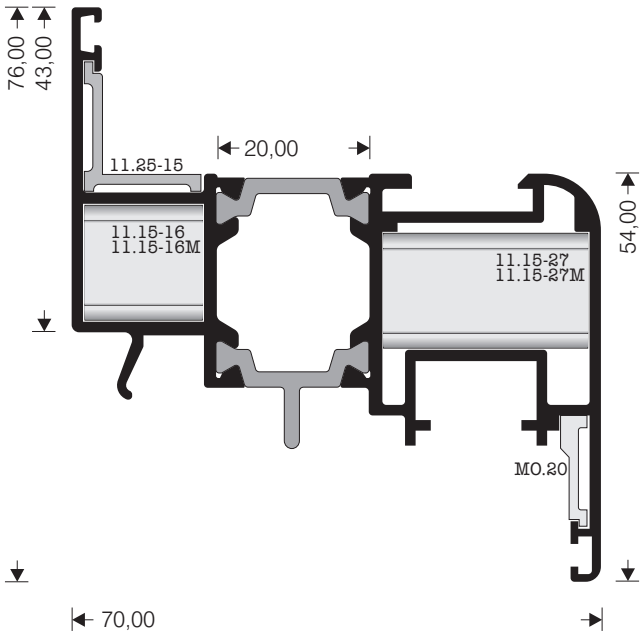

ΦΥΛΛΟ ΙΣΙΟ ΜΕΓΑΛΟ
SASH LARGE FLAT

# M 11358
W=1964 gr/m

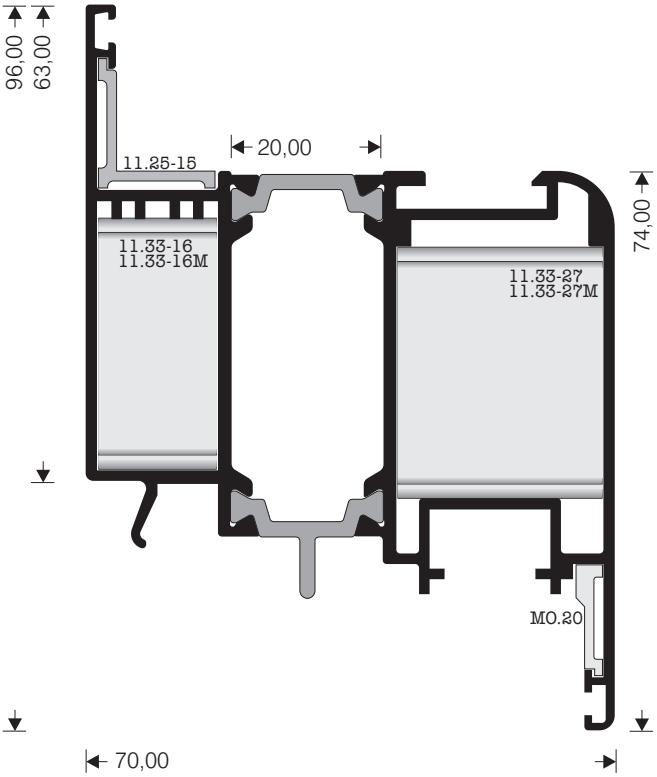

11..**** - Πρεσσαριστη γωνια **11.**.**M** - Μηχανικη γωνια
11..**** - Punching corner **11.**.**M** - Mechanical corner

ΦΥΛΛΟ ΚΑΜΠΥΛΟ ΜΙΚΡΟ
SASH SMALL ROUND

# M 11340
W=1444 gr/m

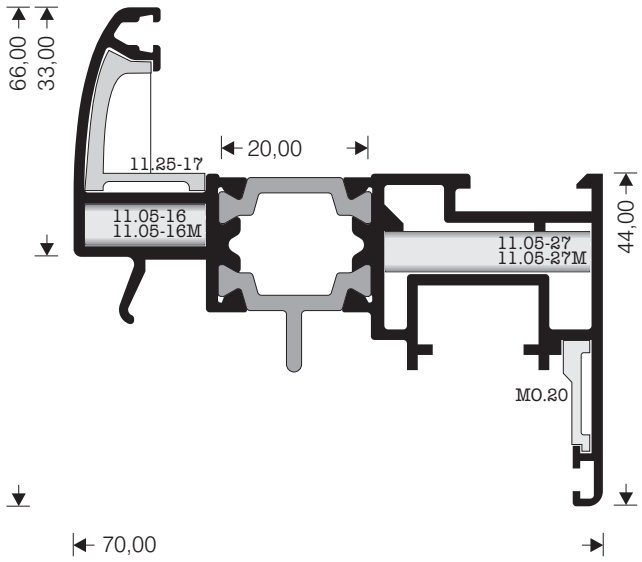

ΦΥΛΛΟ ΚΑΜΠΥΛΟ ΜΕΣΑΙΟ
SASH MEDIUM ROUND

# M 11344
W=1614 gr/m

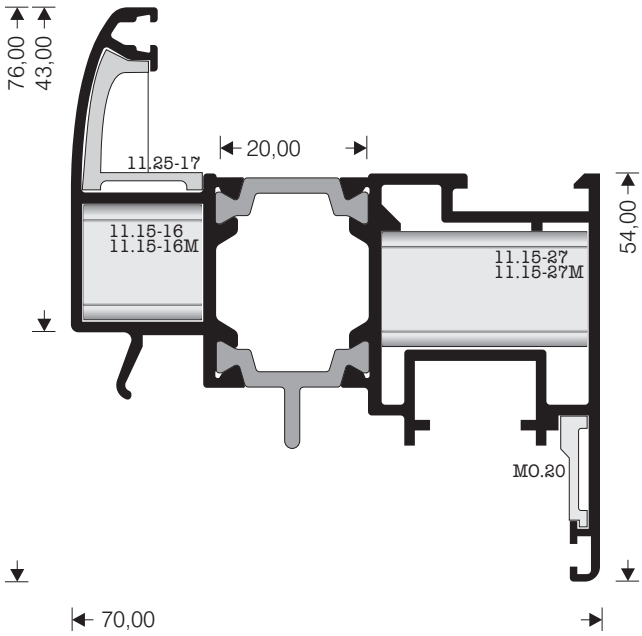

ΦΥΛΛΟ ΚΑΜΠΥΛΟ ΜΕΓΑΛΟ
SASH LARGE ROUND

# M 11348
W=2016 gr/m

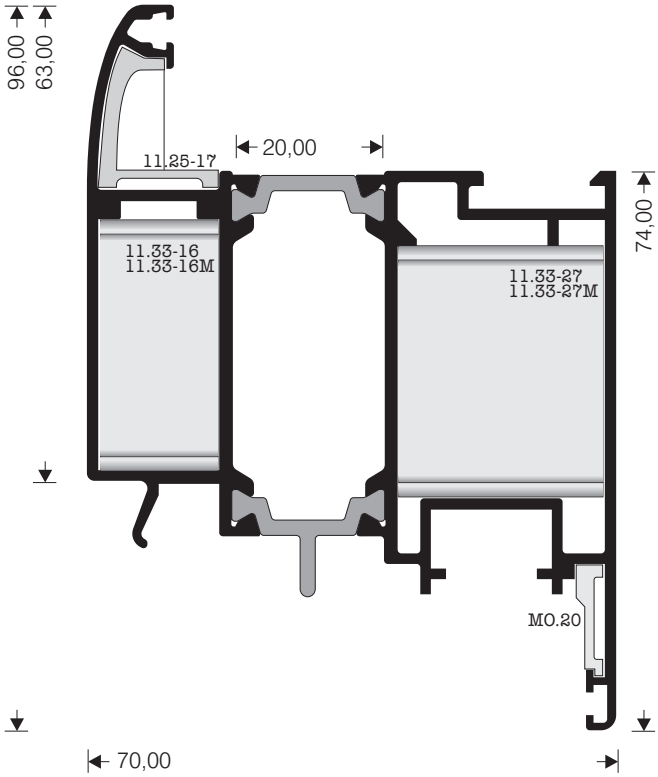

ΦΥΛΛΟ ΜΙΚΡΟ “PVC-LOOK”
SASH SMALL “PVC-LOOK”

# M 11330
W=1585 gr/m

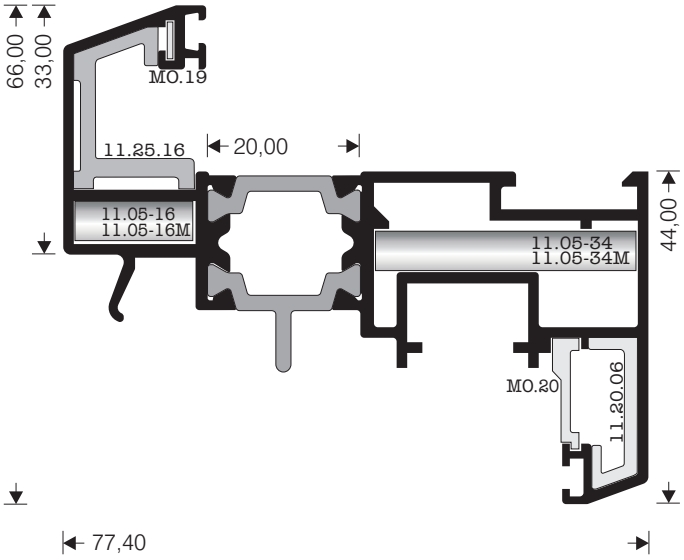

ΦΥΛΛΟ ΜΕΣΑΙΟ “PVC-LOOK”
SASH MEDIUM “PVC-LOOK”

# M 11334
W=1756 gr/m

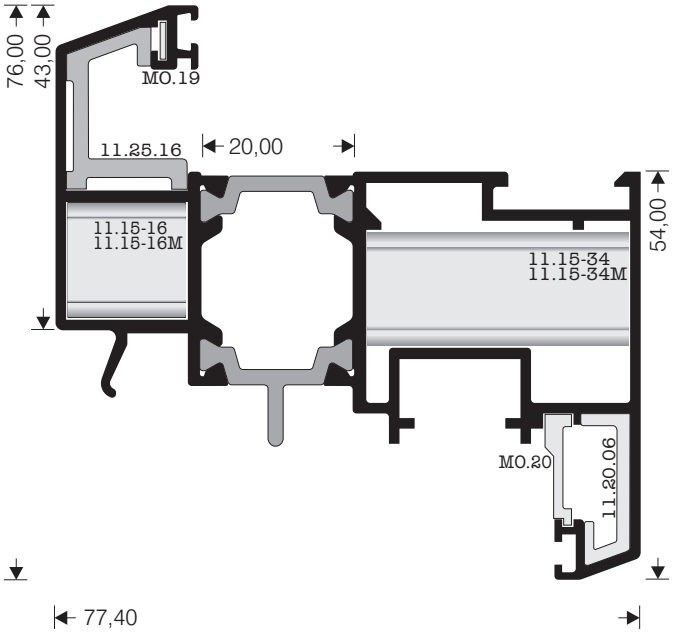

ΦΥΛΛΟ ΜΕΓΑΛΟ “PVC-LOOK”
SASH LARGE “PVC-LOOK”

# M 11338
W=2110 gr/m

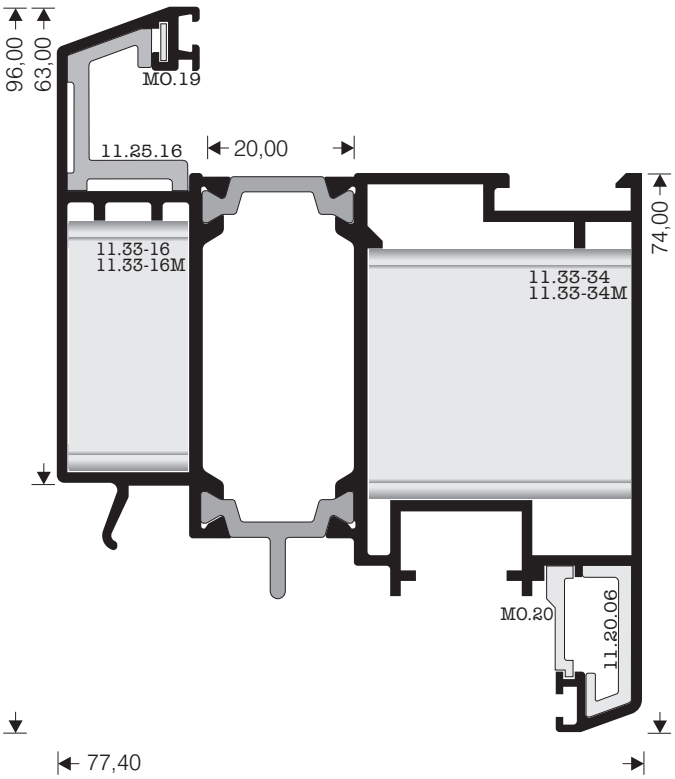

11..**** - Πρεσσαριστη γωνια **11.**.**M** - Μηχανικη γωνια
11..**** - Punching corner **11.**.**M** - Mechanical corner

ΦΥΛΛΟ ΜΙΚΡΟ “PVC-LOOK” **M 11320**
SASH SMALL “PVC-LOOK” W=1592 gr/m

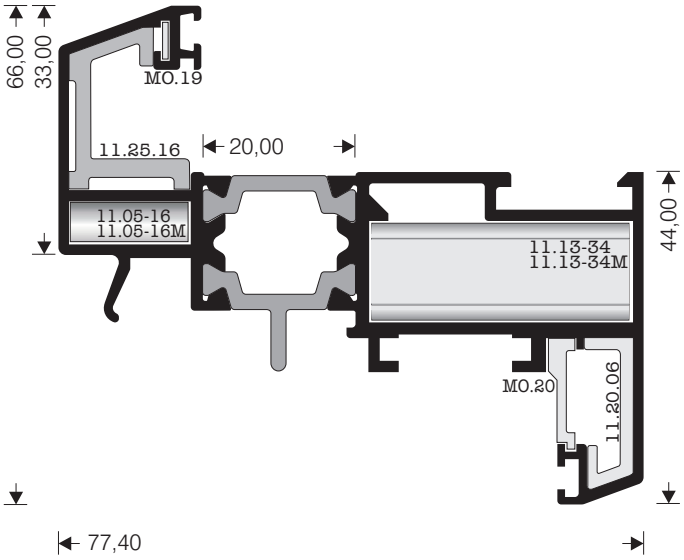

ΦΥΛΛΟ ΜΕΣΑΙΟ “PVC-LOOK” **M 11324**
SASH MEDIUM “PVC-LOOK” W=1746 gr/m

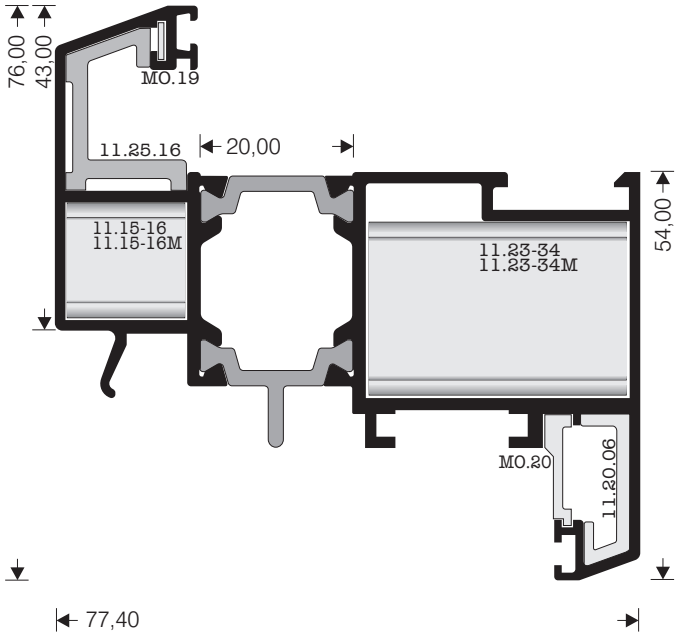

ΦΥΛΛΟ ΜΕΓΑΛΟ “PVC-LOOK” **M 11328**
SASH LARGE “PVC-LOOK” W=2096 gr/m

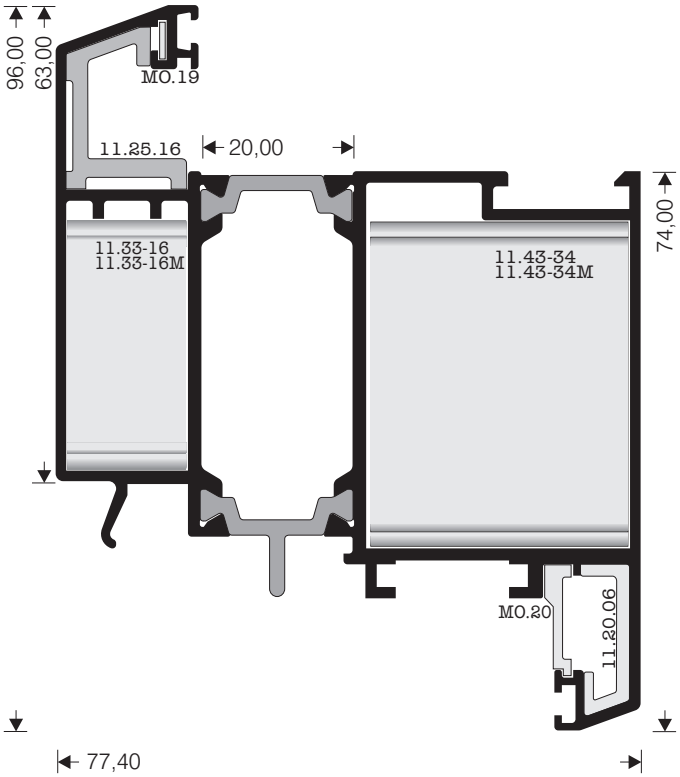

ΦΥΛΛΟ ΑΝΟΙΓΟΜΕΝΟ ΠΡΟΣ ΤΑ ΕΞΩ "PVC-LOOK" ΜΕΓΑΛΟ
SASH OPENING OUTSIDE "PVC-LOOK" LARGE

M 11391

W=2079 gr/m

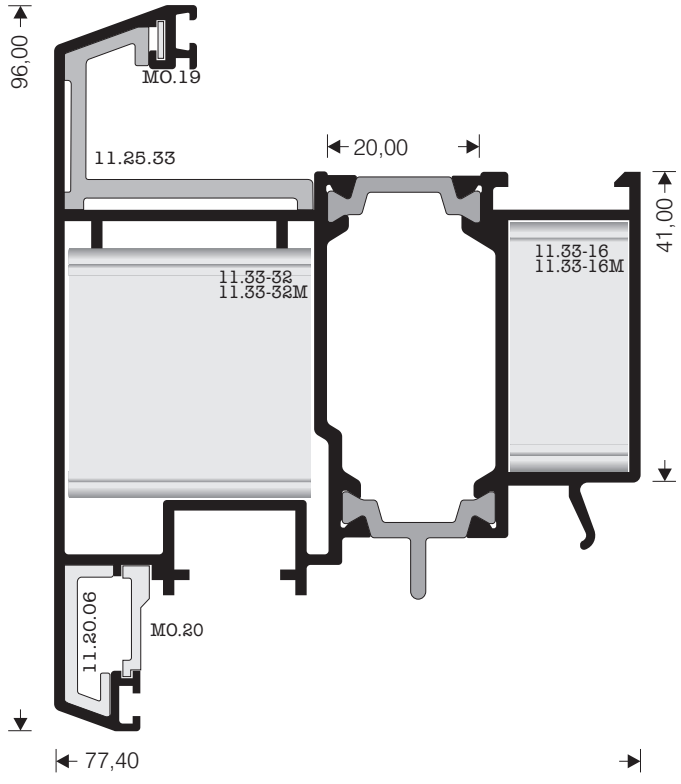

ΦΥΛΛΟ ΑΝΟΙΓΟΜΕΝΟ ΠΡΟΣ ΤΑ ΕΞΩ ΚΑΜΠΥΛΟ ΜΕΓΑΛΟ
SASH OPENING OUTSIDE ROUND LARGE

M 11392

W=1940 gr/m

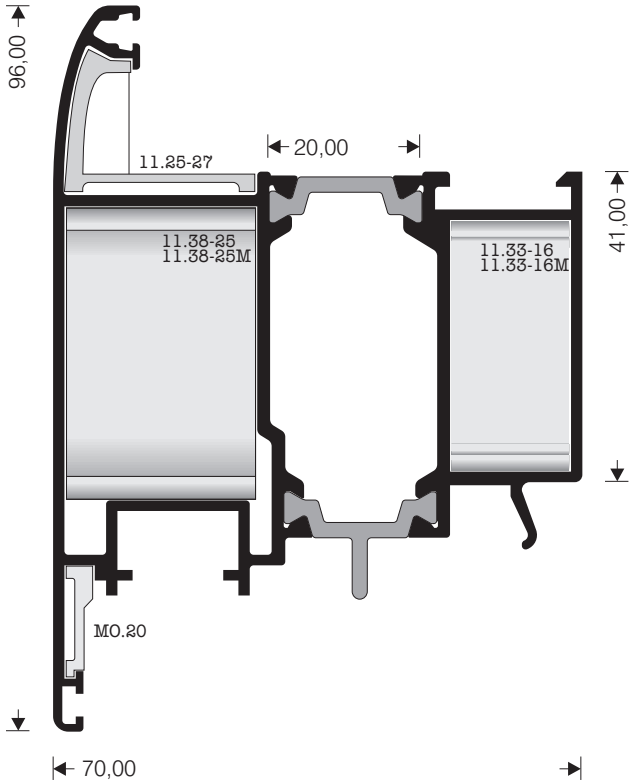

ΦΥΛΛΟ ΑΝΟΙΓΟΜΕΝΟ ΠΡΟΣ ΤΑ ΕΞΩ "PVC-LOOK" ΜΕΓΑΛΟ
SASH OPENING OUTSIDE "PVC-LOOK" LARGE

M 11390

W=2084 gr/m

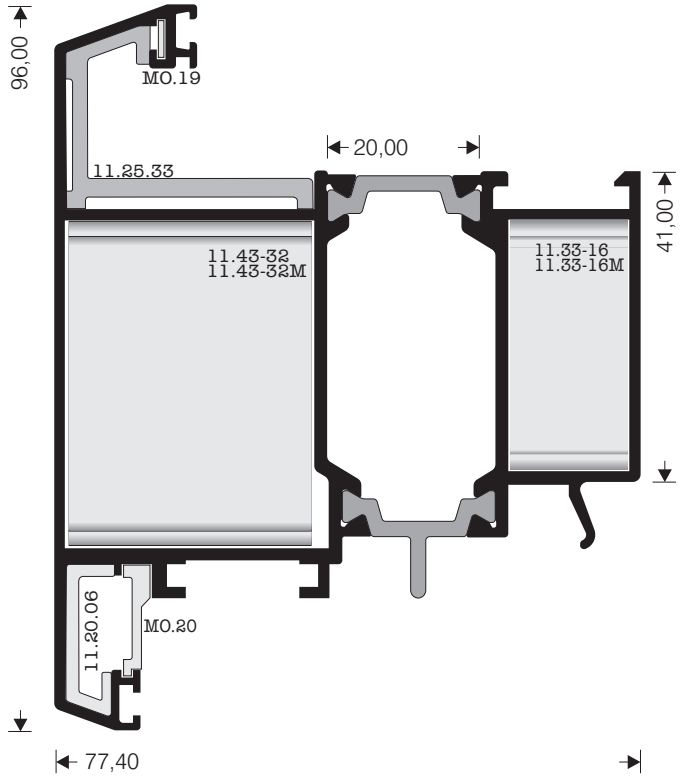

ΦΥΛΛΟ ΑΝΟΙΓΟΜΕΝΟ ΠΡΟΣ ΤΑ ΕΞΩ ΙΣΙΟ ΜΕΓΑΛΟ
SASH OPENING OUTSIDE FLAT LARGE

M 11393

W=2030 gr/m

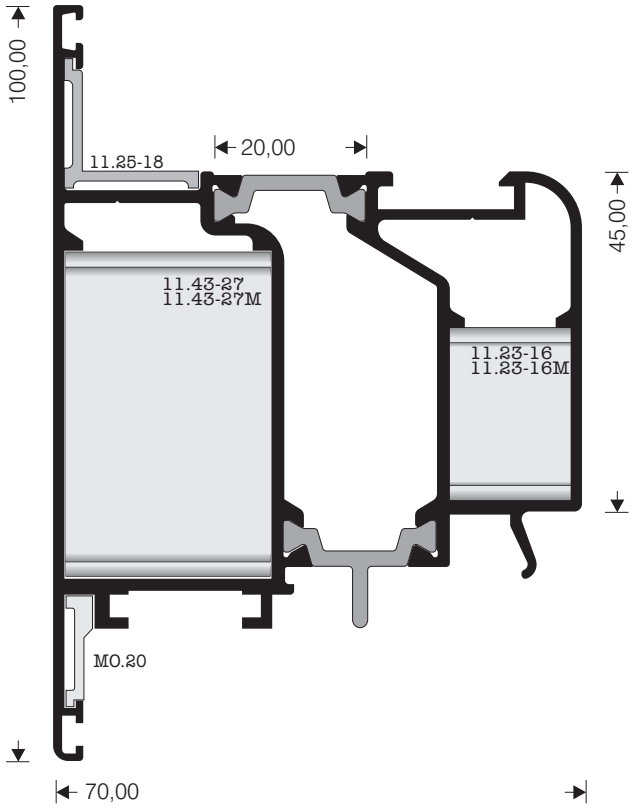

11..**** - Πρεσσαριστη γωνια **11.**.**M** - Μηχανικη γωνια
11..**** - Punching corner **11.**.**M** - Mechanical corner

“ΤΑΥ” ΜΙΚΡΟ “PVC-LOOK”
“T” PROFILE SMALL“PVC-LOOK”

M 11362

W=1522 gr/m

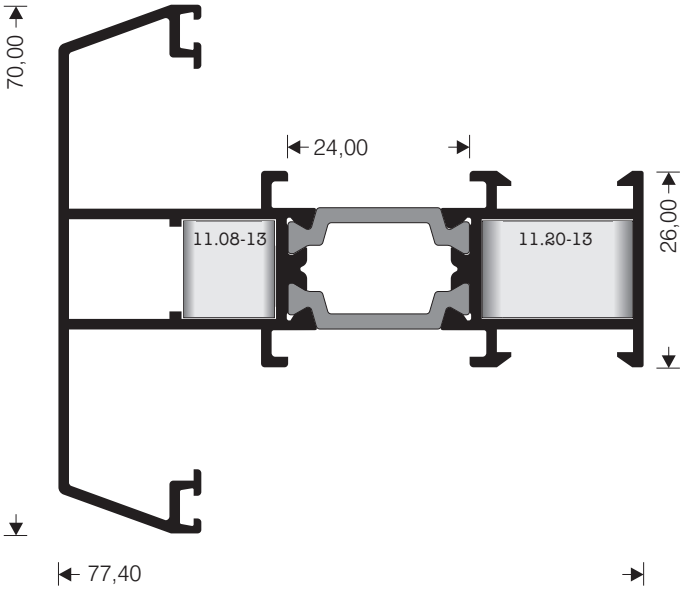

“ΤΑΥ” ΜΕΓΑΛΟ “PVC-LOOK”
“T” PROFILE LARGE “PVC-LOOK”

M 11366

W=1866 gr/m

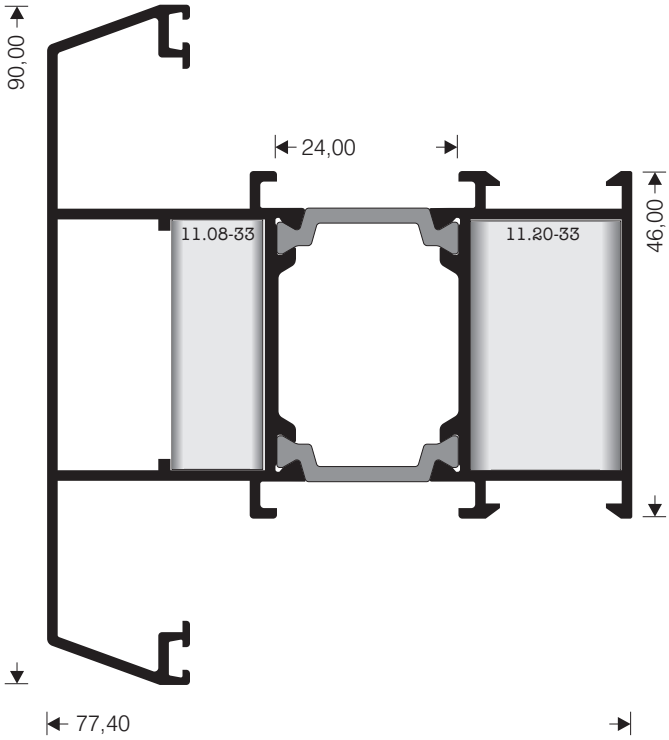

ΦΥΛΛΟ ΜΙΚΡΟ “CLASSIC”
SASH SMALL “CLASSIC”

M 11370

W=1685 gr/m

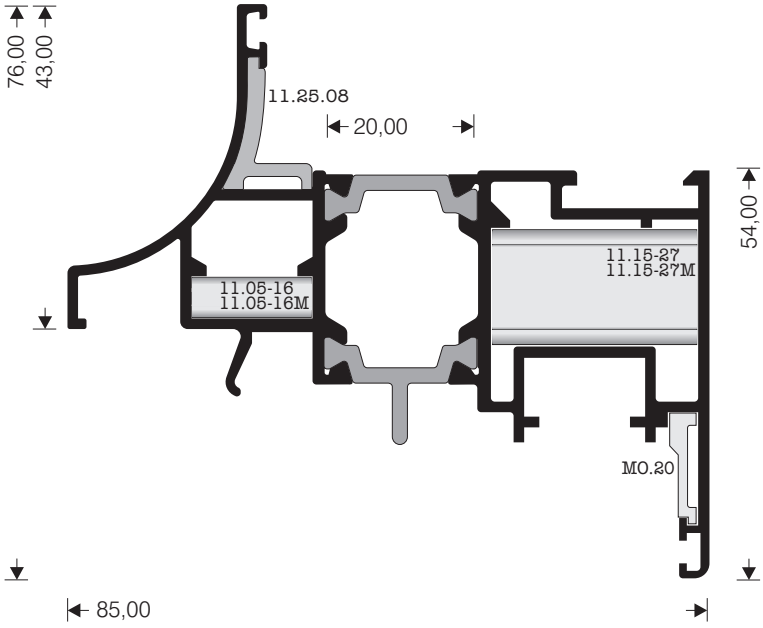

ΜΠΙΝΙ ΚΑΜΠΥΛΟ
ADJOINING PROFILE ROUND

# M 11258
W=1430 gr/m

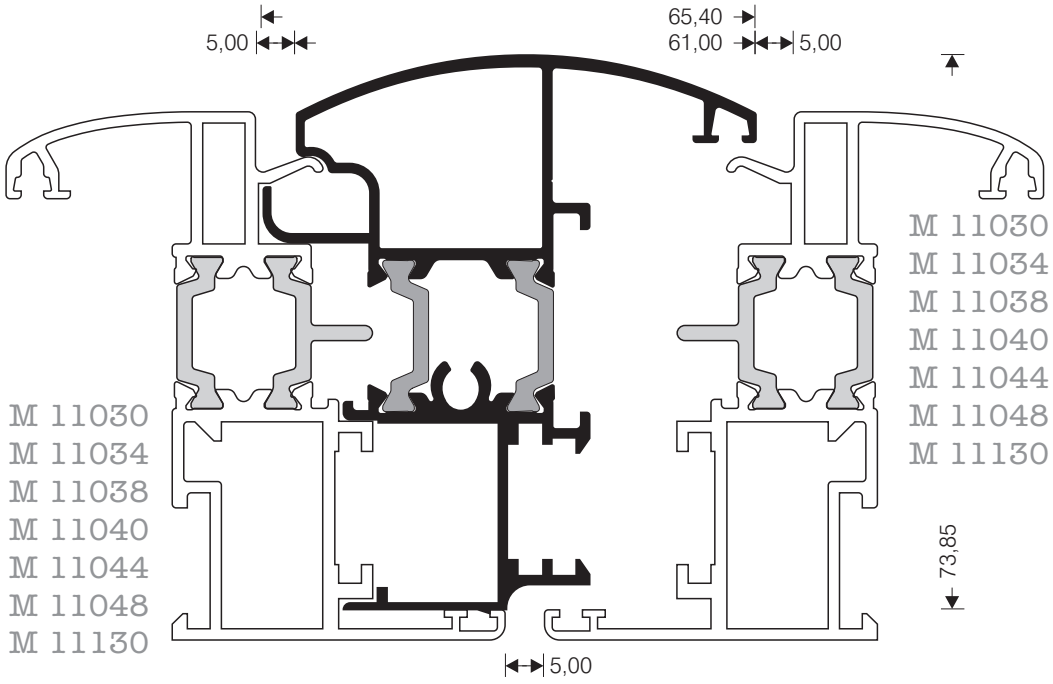

ΚΑΣΑ-ΚΟΛΩΝΑ ΚΑΜΠΥΛΗ
FRAME /COLUMN ROUND

# M 11168
W=2363 gr/m

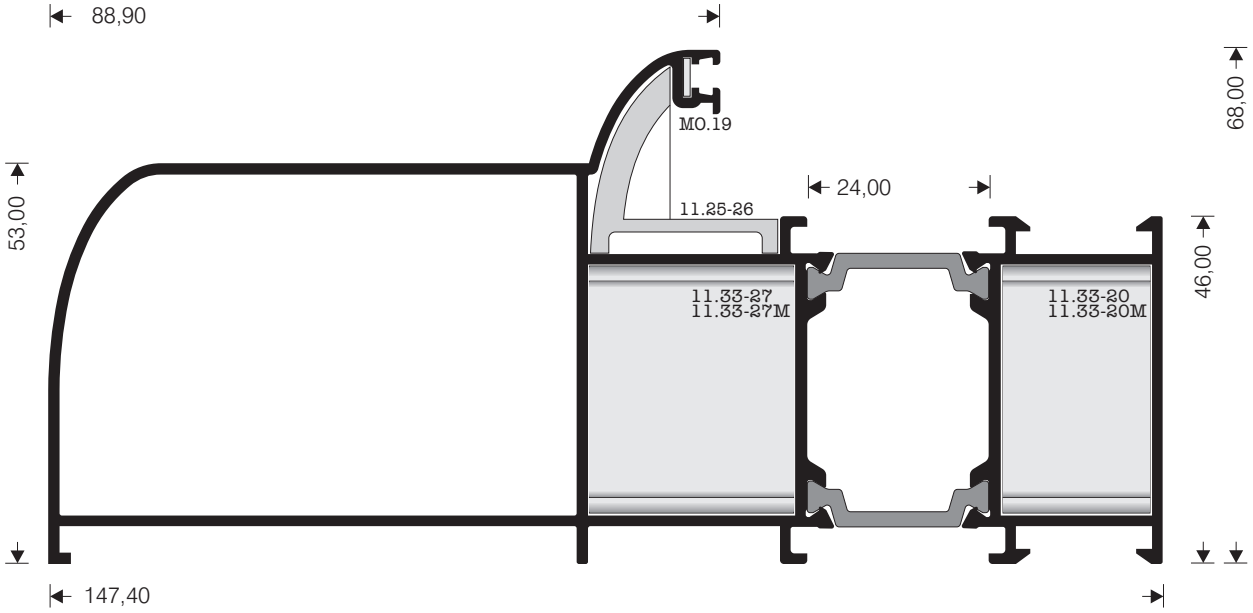

11..**** - Πρεσσαριστη γωνια **11.**.****M** - Μηχανικη γωνια
11..**** - Punching corner **11.**.****M** - Mechanical corner

M 11080

W=2273 gr/m

ΚΑΣΑ-ΚΟΛΩΝΑ ΚΑΜΠΥΛΗ
FRAME EXPANSION JOINT

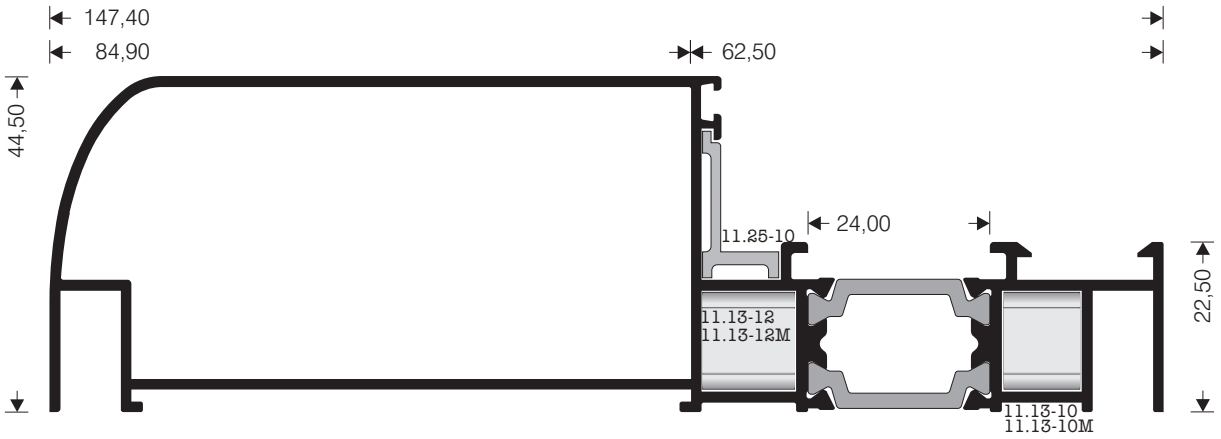

M 11076

W=1623 gr/m

ΚΑΣΑ-"ΤΑΥ, ΜΙΣΟ
"T" PROFILE EXPANSION JOINT

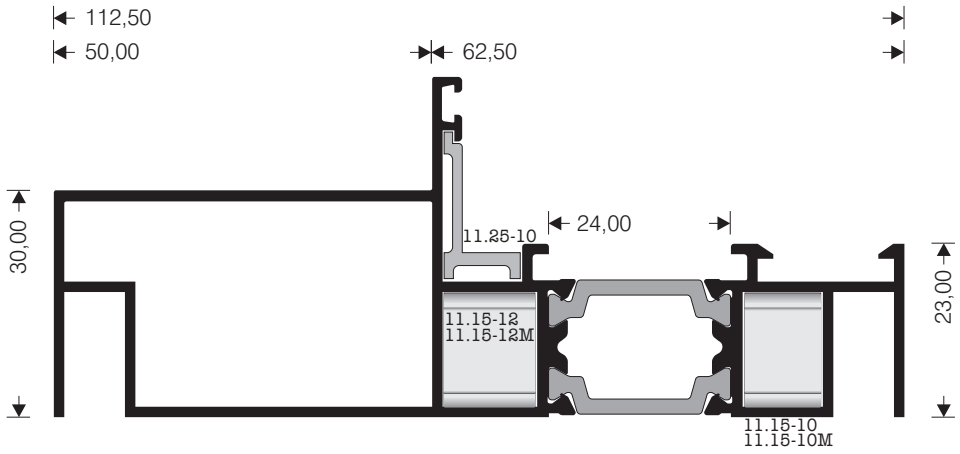

11..**** - Πρεσσαριστη γωνια
11..**** - Punching corner

11..**M** - Μηχανικη γωνια
11..**M** - Mechanical corner

ΚΟΛΩΝΑ "ΤΑΥ", ΚΑΜΠΥΛΗ, ΜΙΚΡΗ
"T" PROFILE ROUND SMALL

M 11188

W=2245 gr/m

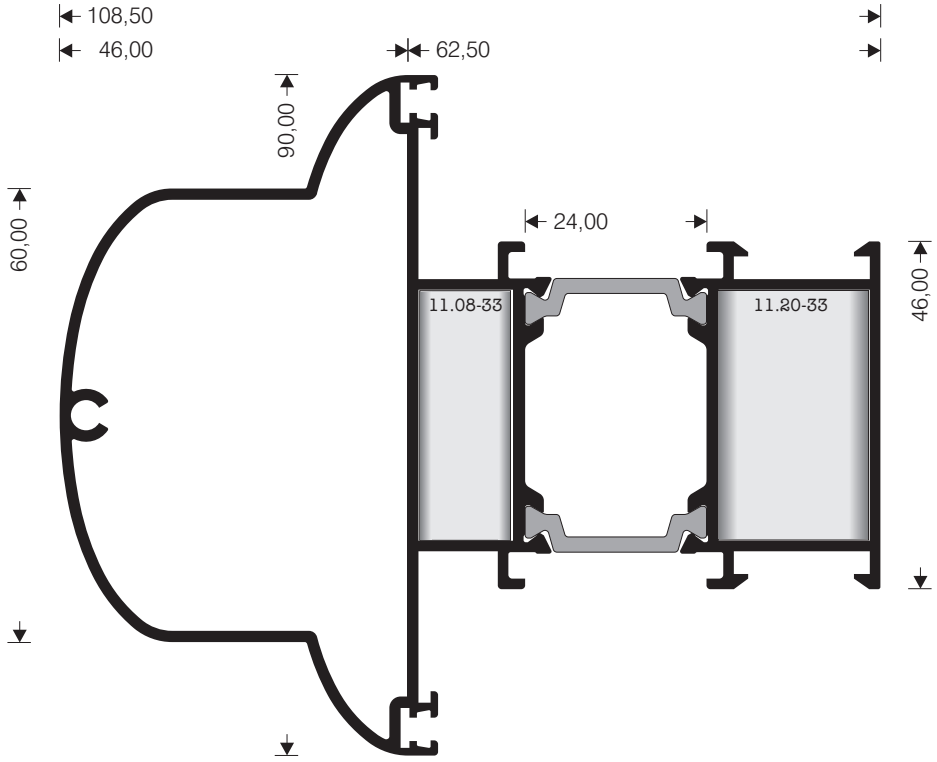

ΚΟΛΩΝΑ "ΤΑΥ", ΚΑΜΠΥΛΗ, ΜΕΓΑΛΗ
"T" PROFILE ROUND LARGE

M 11078

W=2399 gr/m

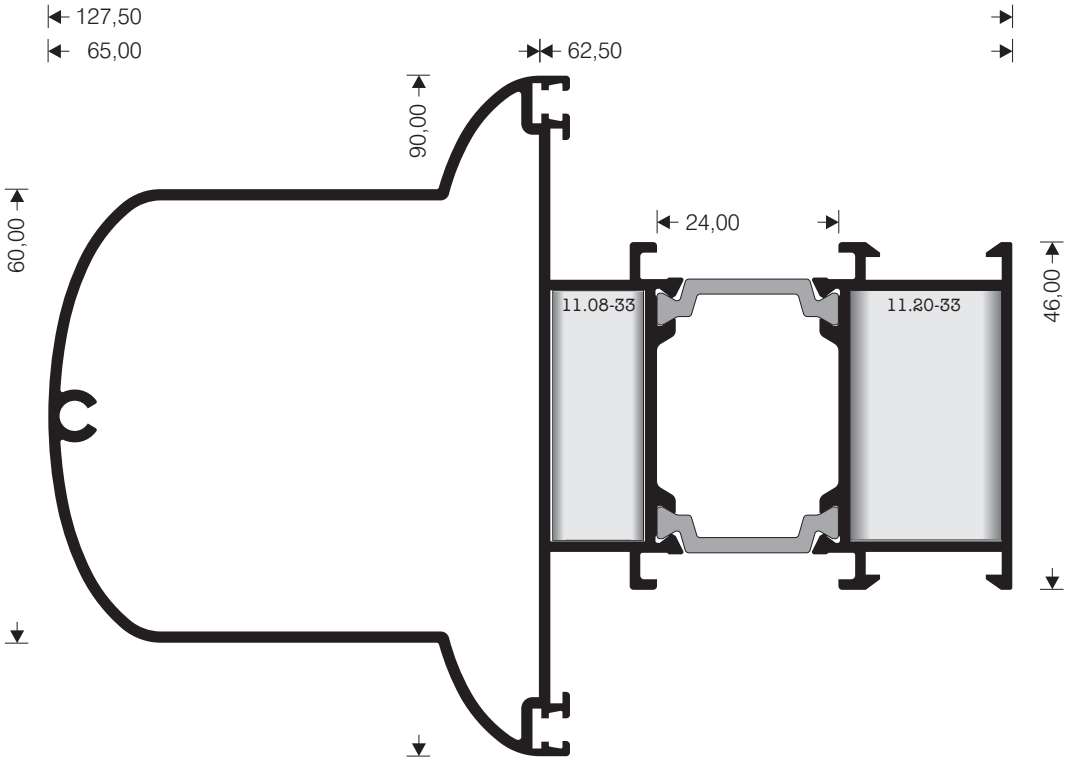

M 11062

"TAY"

W=1224 gr/m

"T" PROFILE

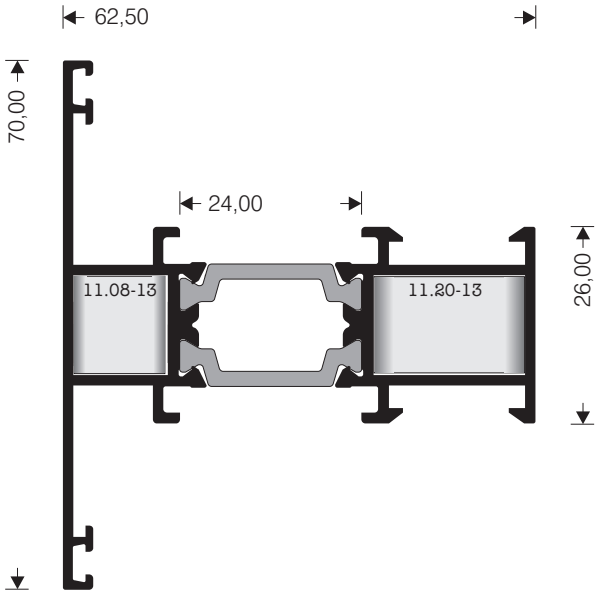

M 11064

"TAY"

W=1392 gr/m

"T" PROFILE

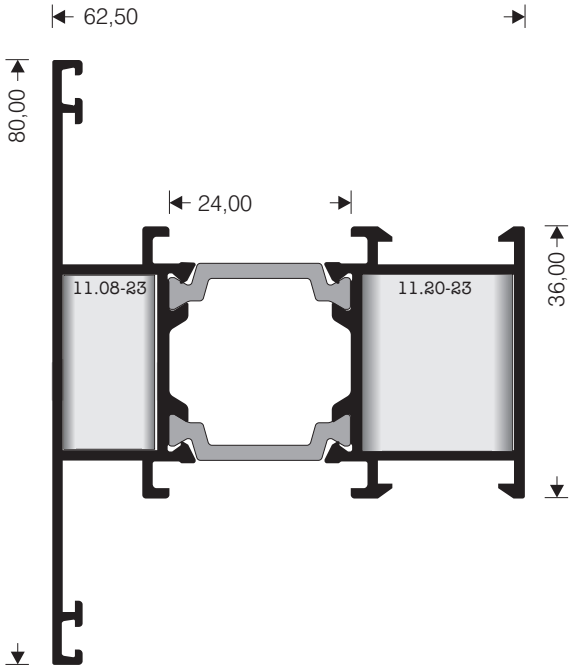

M 11066

"TAY"

W=1545 gr/m

"T" PROFILE

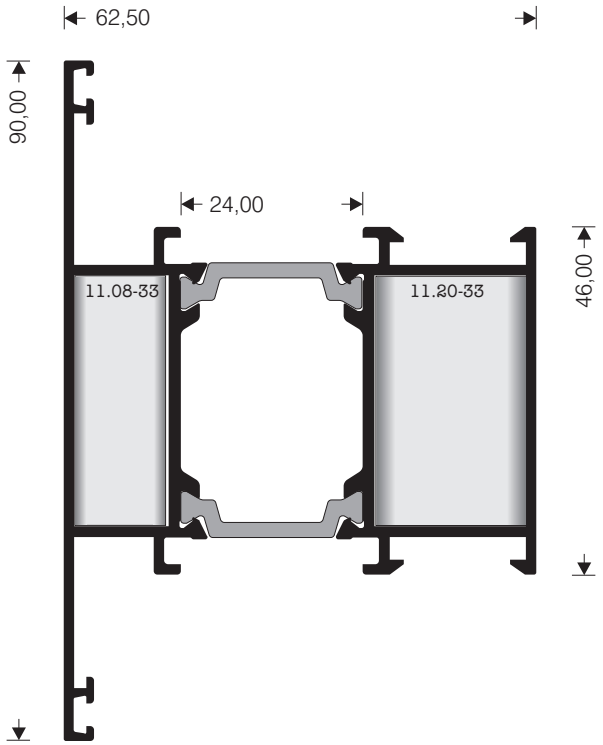

M 11266

"TAY"

W=1678 gr/m

"T" PROFILE

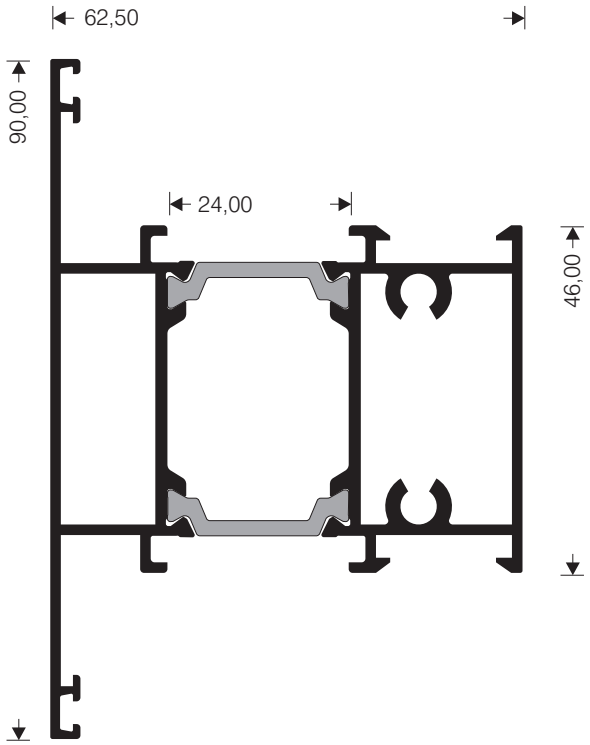

"TAY"
"T" PROFILE

M 11070

W=3802 gr/m

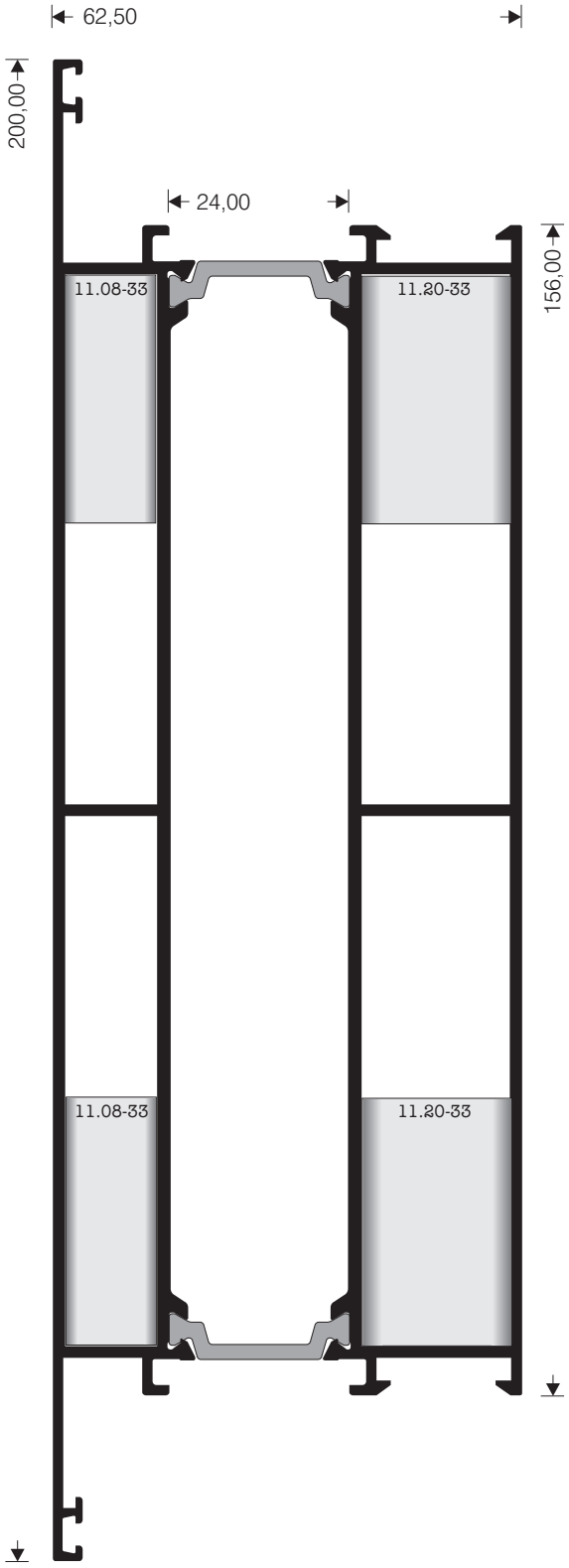

"TAY"
"T" PROFILE

M 11068

W=2649 gr/m

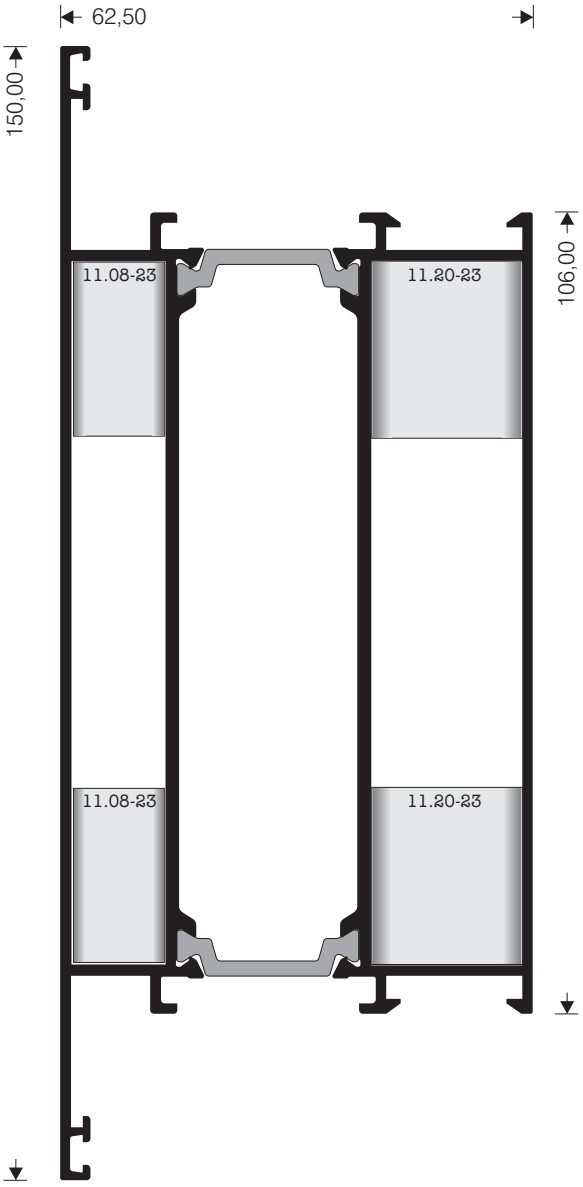

M 11074

W=2148 gr/m

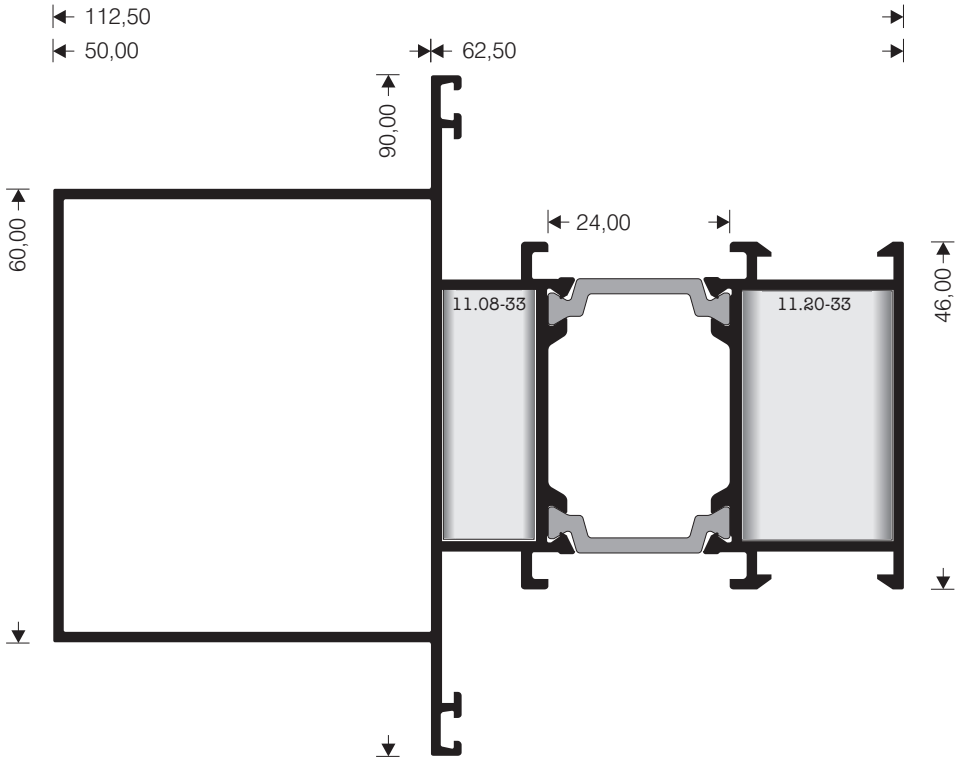

M 11144

ΣΥΜΠΛΗΡΩΜΑ ΦΥΛΛΟΥ ΕΙΣΟΔΟΥ ΓΙΑΤΗ ΔΗΜΙΟΥΡΓΙΑ ΤΑΜΠΛΑ

W=1588 gr/m

SUPPLEMENTARY PROFILE EXTENSION (KICKPLATE)

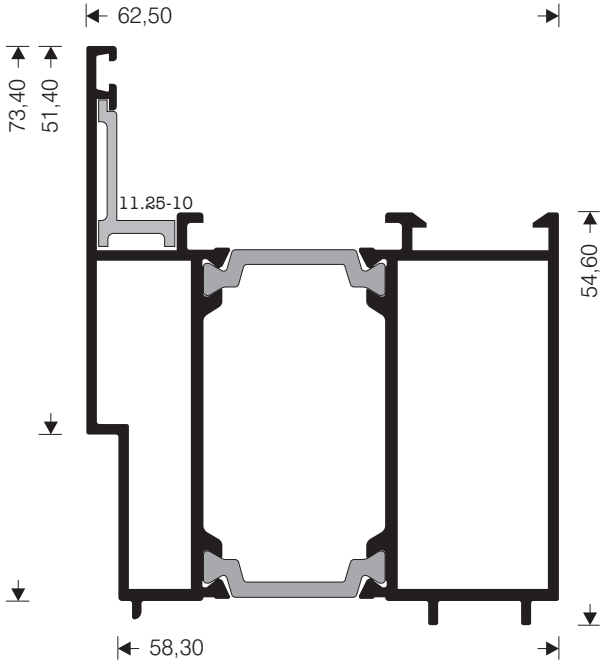

M 11218

ΚΟΥΜΠΩΜΑ ΤΑΜΠΛΑ

W=345 gr/m

SUPPLEMENTARY PROFILE FOR KICK PLATE

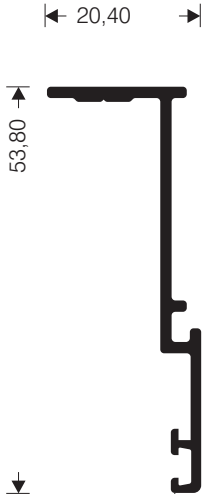

11..**** - Πρεσσαριστη γωνια **11.**.**M** - Μηχανικη γωνια
11..**** - Punching corner **11.**.**M** - Mechanical corner

ΤΑΜΠΛΑΣ
KICKPLATE

M 11242

W=2957 gr/m

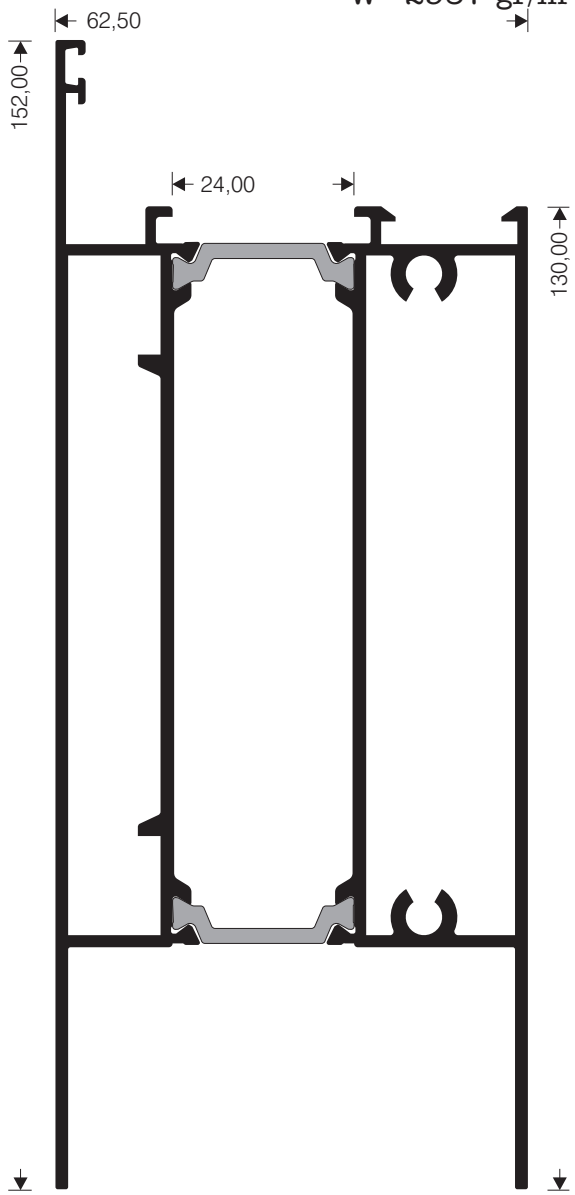

ΤΑΜΠΛΑΣ
KICKPLATE

M 11142

W=2827 gr/m

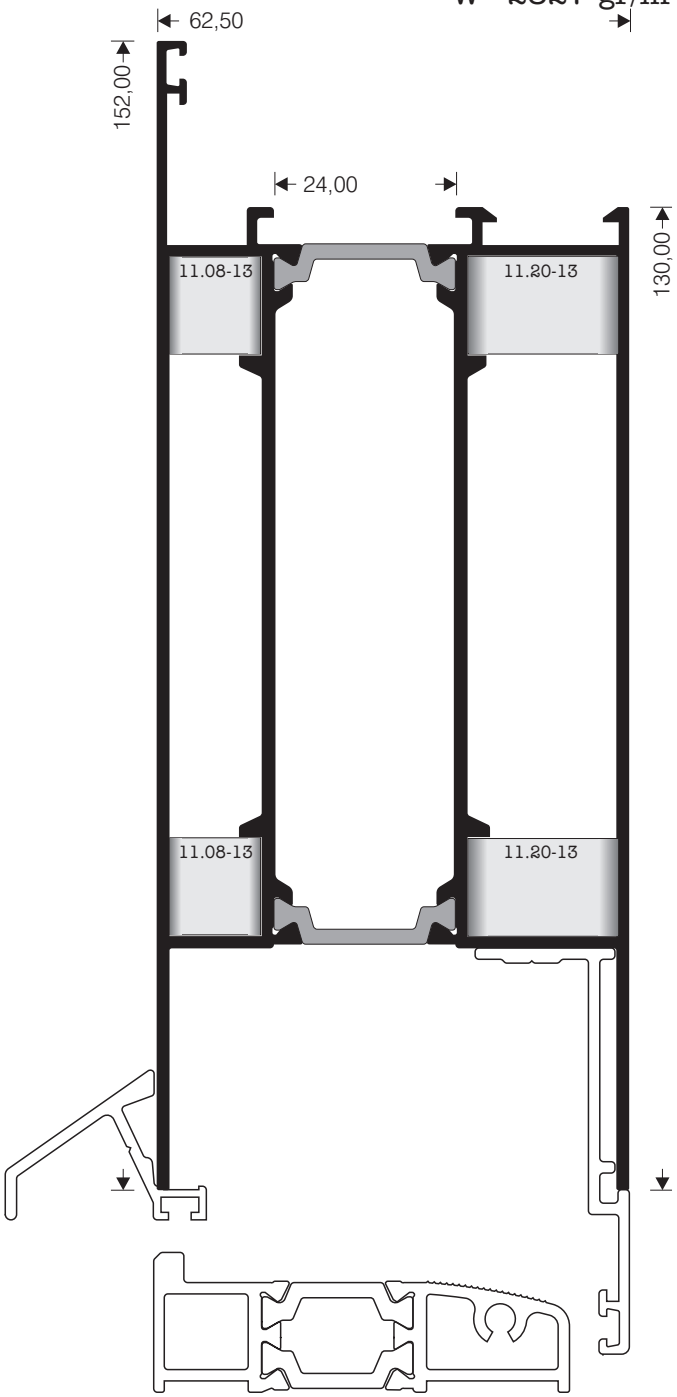

ΝΕΡΟΧΥΤΗΣ
WATER CAP

M 11226

W=227 gr/m

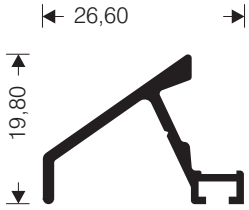

ΠΡΟΦΙΛ ΓΙΑ ΚΑΤΩΚΑΣΙ
THRESHOLD

M 11274

W= 815 gr/m

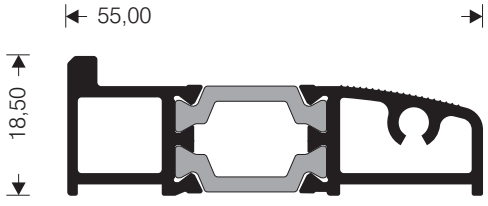

M 11149

W= 2517 gr/m

ΕΝΙΑΙΑ ΚΑΣΑ

LARGE FRAME
WINDOW / SHUTTER

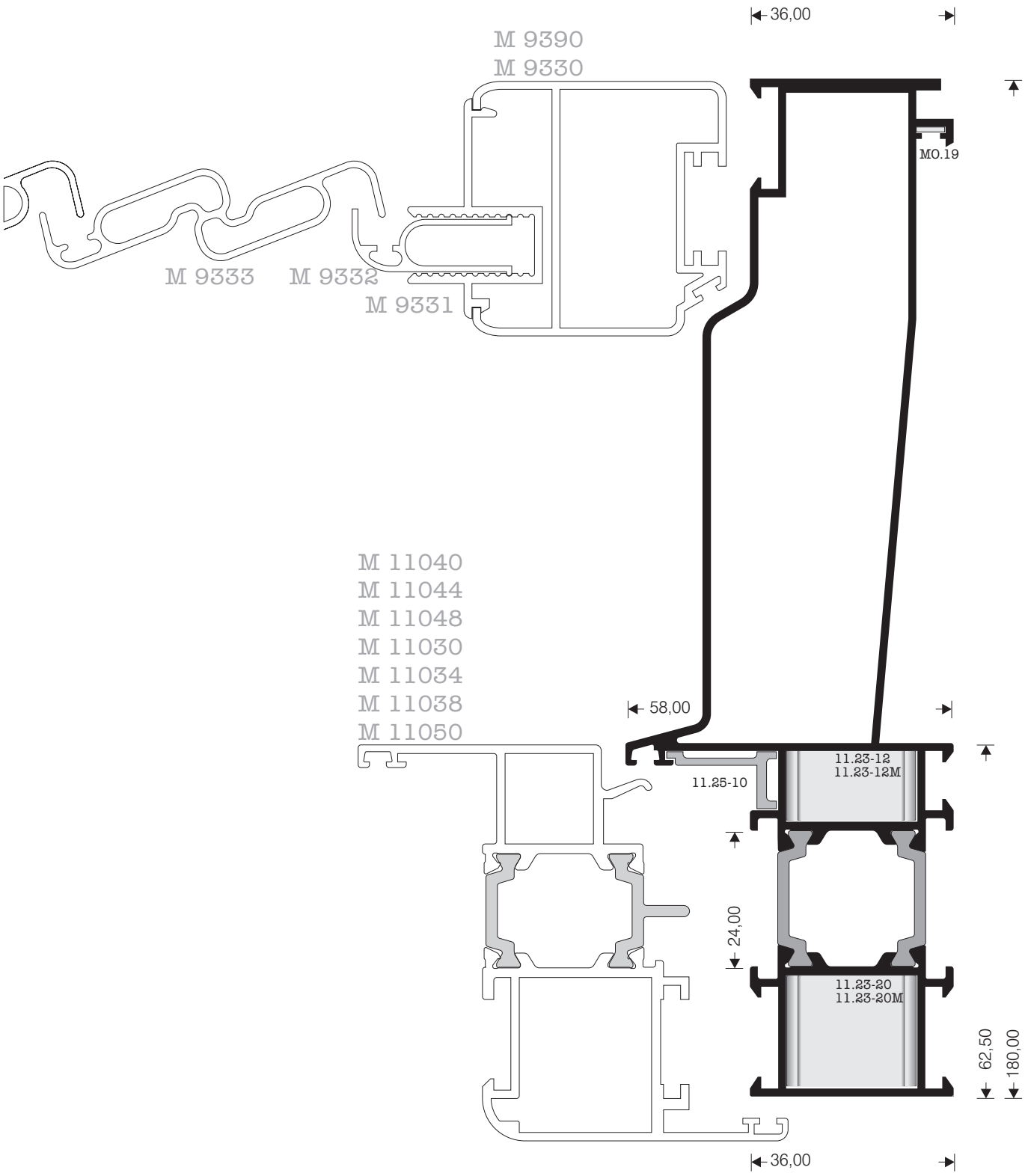

ΚΑΣΑ ΔΙΑΙΡΟΥΜΕΝΗ
FRAME TWO PIECE

M 11205

W=1524 gr/m

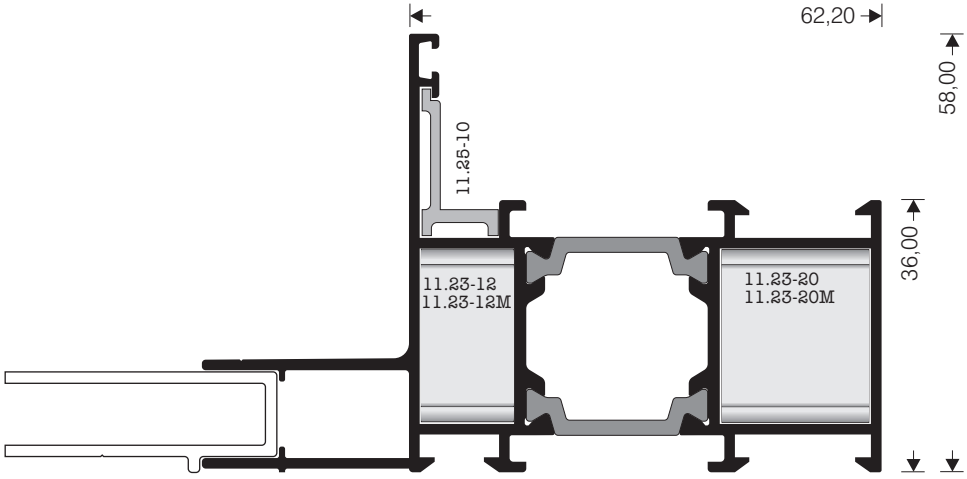

ΚΑΣΑ ΔΙΑΙΡΟΥΜΕΝΗ
FRAME TWO PIECE

M 9379

W=1446 gr/m

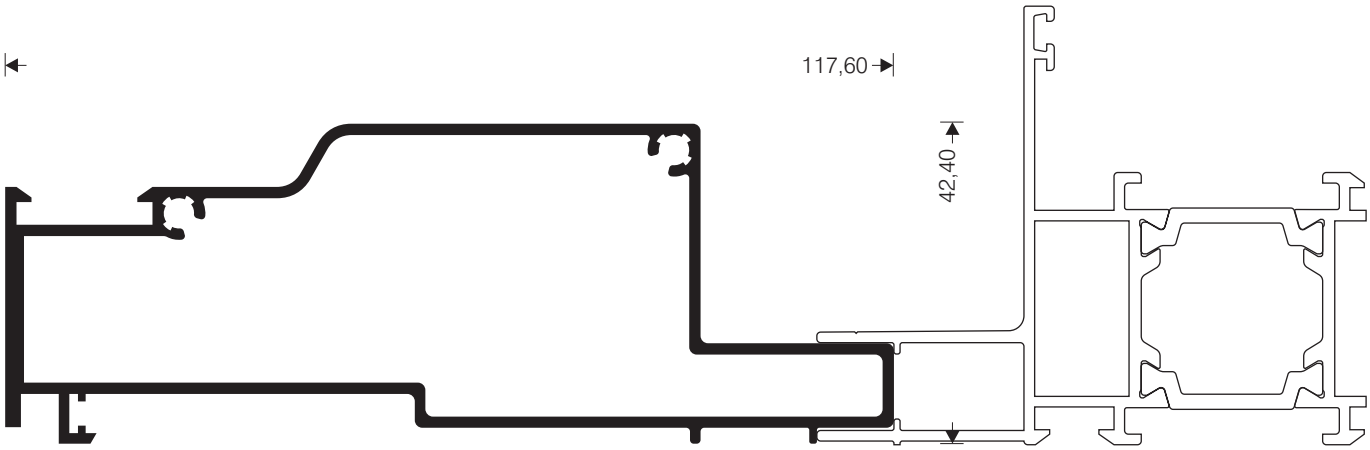

ΚΑΤΩΚΑΣΙ
FRAME TWO PIECE

M 9381

W=1036 gr/m

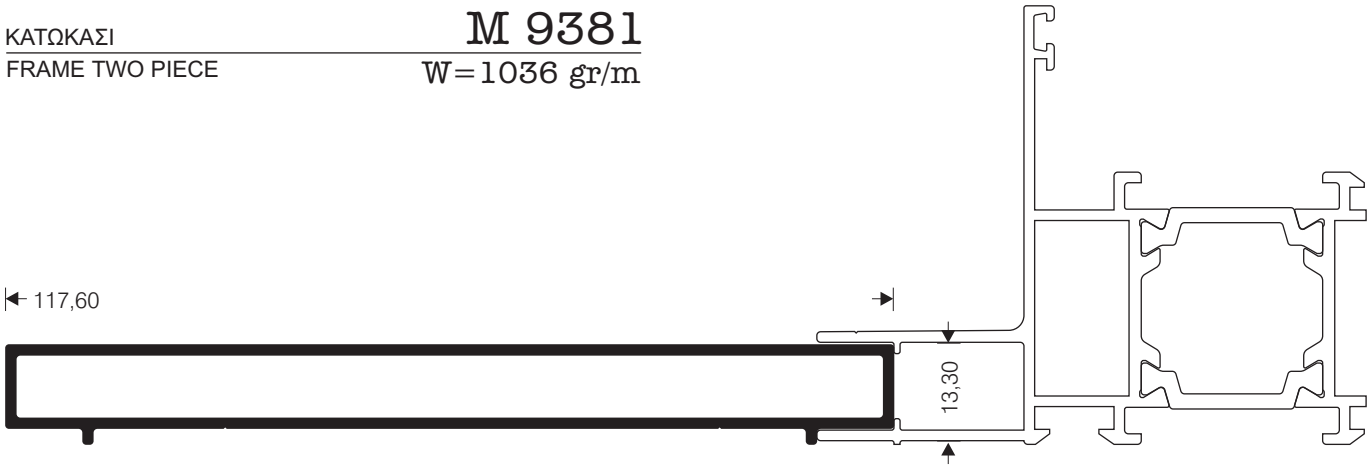

11..**** - Πρεσσαριστη γωνια **11.**.**M** - Μηχανικη γωνια
11..**** - Punching corner **11.**.**M** - Mechanical corner

M 11082

W=1799 gr/m

ΦΥΛΛΟ ΕΙΣΟΔΟΥ
ΑΝΟΙΓΟΜΕΝΟ ΜΕΣΑ

SASH FOR DOOR
OPENING INSIDE

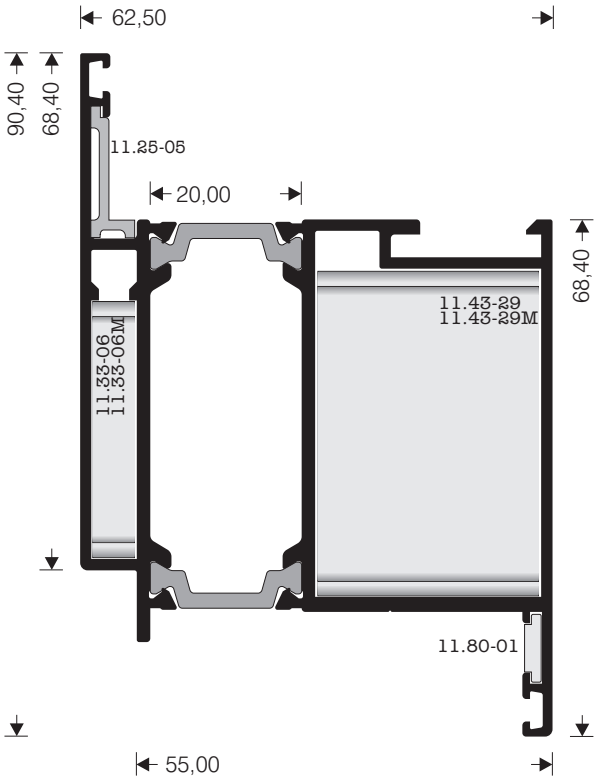

M 11084

W=1816 gr/m

ΦΥΛΛΟ ΕΙΣΟΔΟΥ
ΑΝΟΙΓΟΜΕΝΟ ΕΞΩ

SASH FOR DOOR
OPENING OUTSIDE

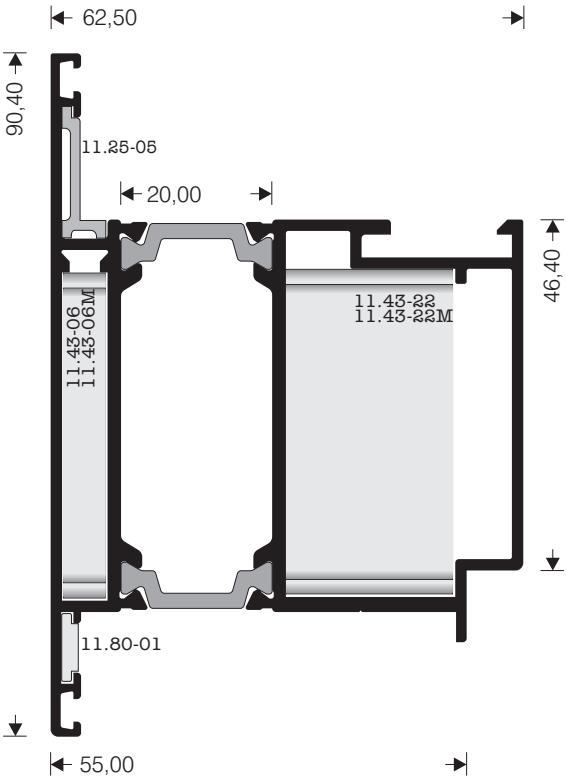

M 11086

W=1656 gr/m

ΚΑΣΑ ΕΙΣΟΔΟΥ

FRAME FOR DOOR

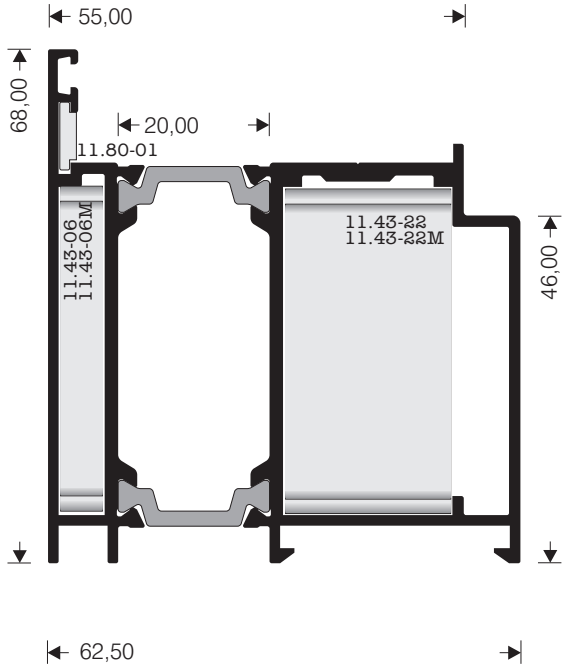

M 11088

W=1629 gr/m

ΚΑΣΑ ΕΙΣΟΔΟΥ

FRAME FOR DOOR

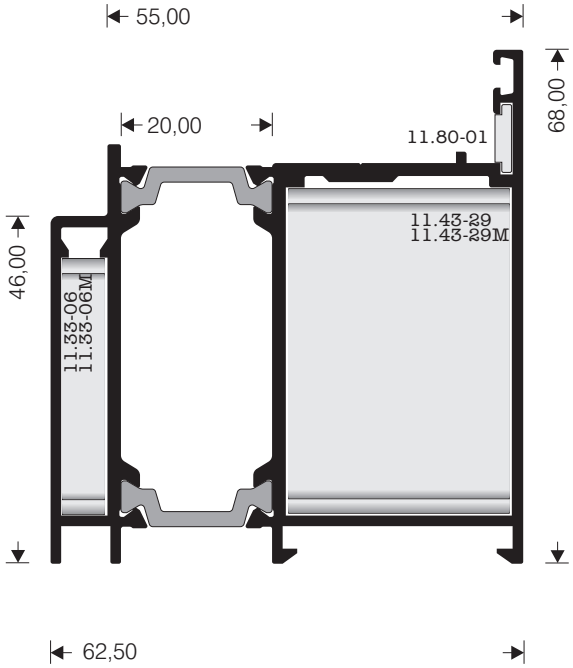

ΦΥΛΛΟ ΕΙΣΟΔΟΥ ΚΑΜΠΥΛΟ
ΑΝΟΙΓΟΜΕΝΟ ΜΕΣΑ

SASH FOR DOOR ROUND
OPENING INSIDE

M 11134

W=1986 gr/m

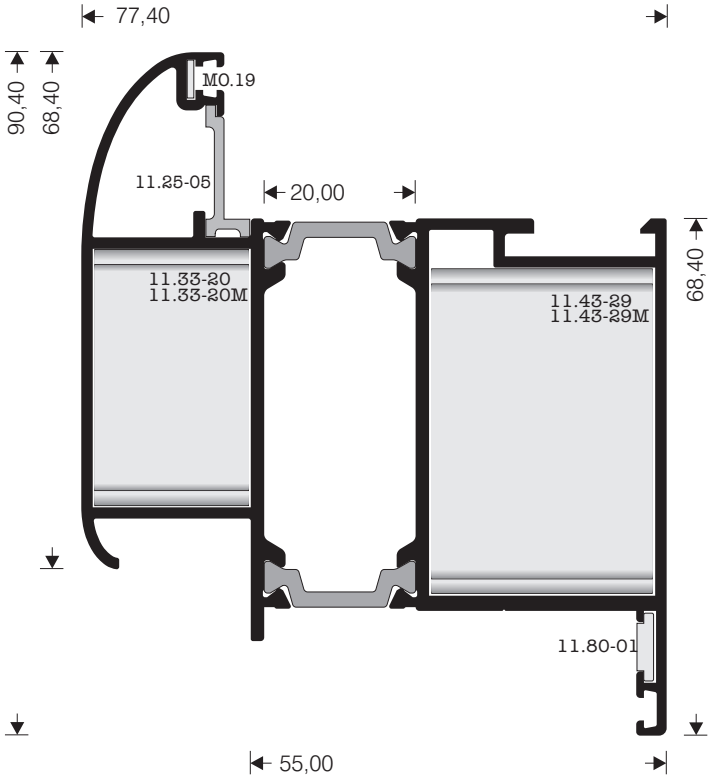

ΦΥΛΛΟ ΕΙΣΟΔΟΥ ΚΑΜΠΥΛΟ
ΑΝΟΙΓΟΜΕΝΟ ΕΞΟ

SASH FOR DOOR ROUND
OPENING OUTSIDE

M 11138

W=2096 gr/m

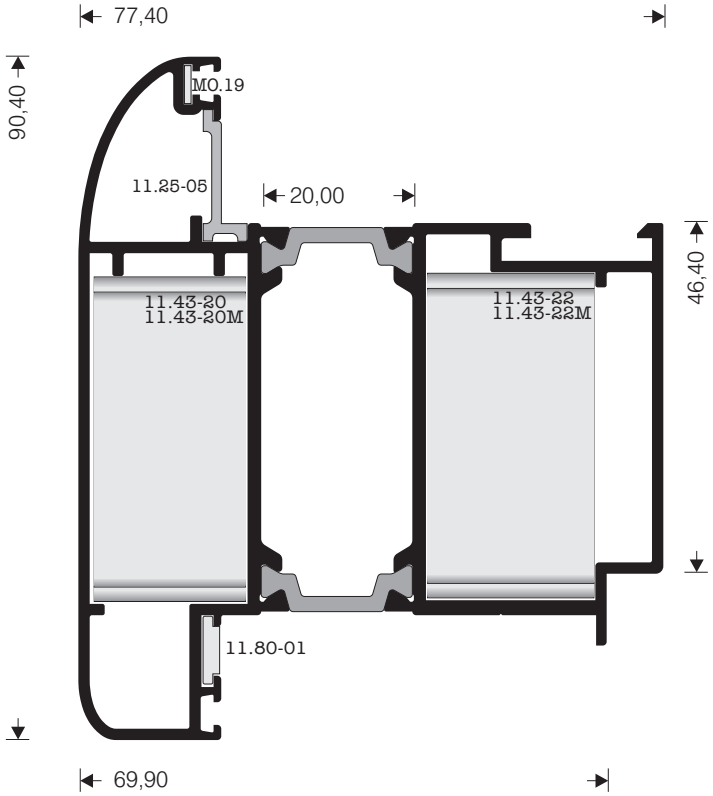

11..**** - Πρεσσαριστη γωνια **11.**.****M** - Μηχανικη γωνια
11..**** - Punching corner **11.**.****M** - Mechanical corner

M 11090

W=1347 gr/m

ΠΡΟΦΙΛ ΓΩΝΙΑΚΗΣ ΚΑΤΑΣΚΕΥΗΣ 90°,ΙΣΙΟ

CORNER PROFILE 90°

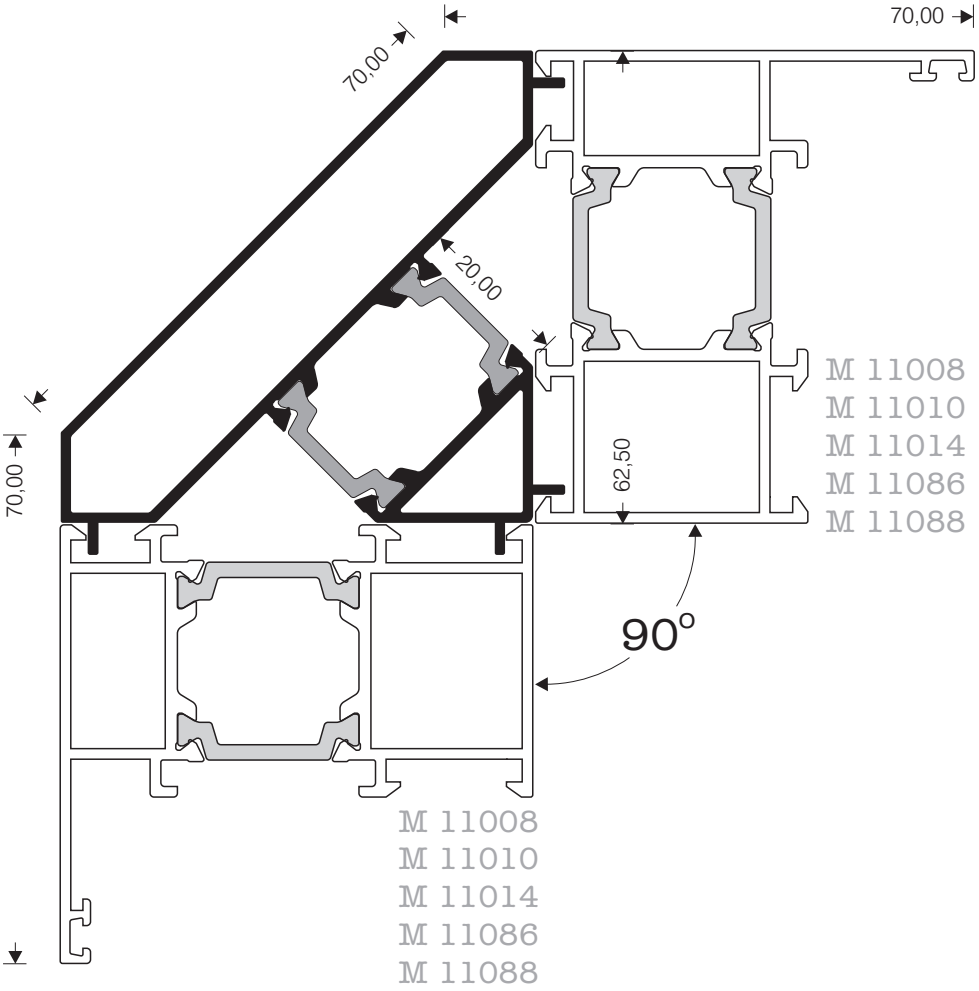

M 11092

W=991 gr/m

ΠΡΟΦΙΛ ΓΩΝΙΑΚΗΣ ΚΑΤΑΣΚΕΥΗΣ 135°,ΙΣΙΟ

CORNER PROFILE 135°

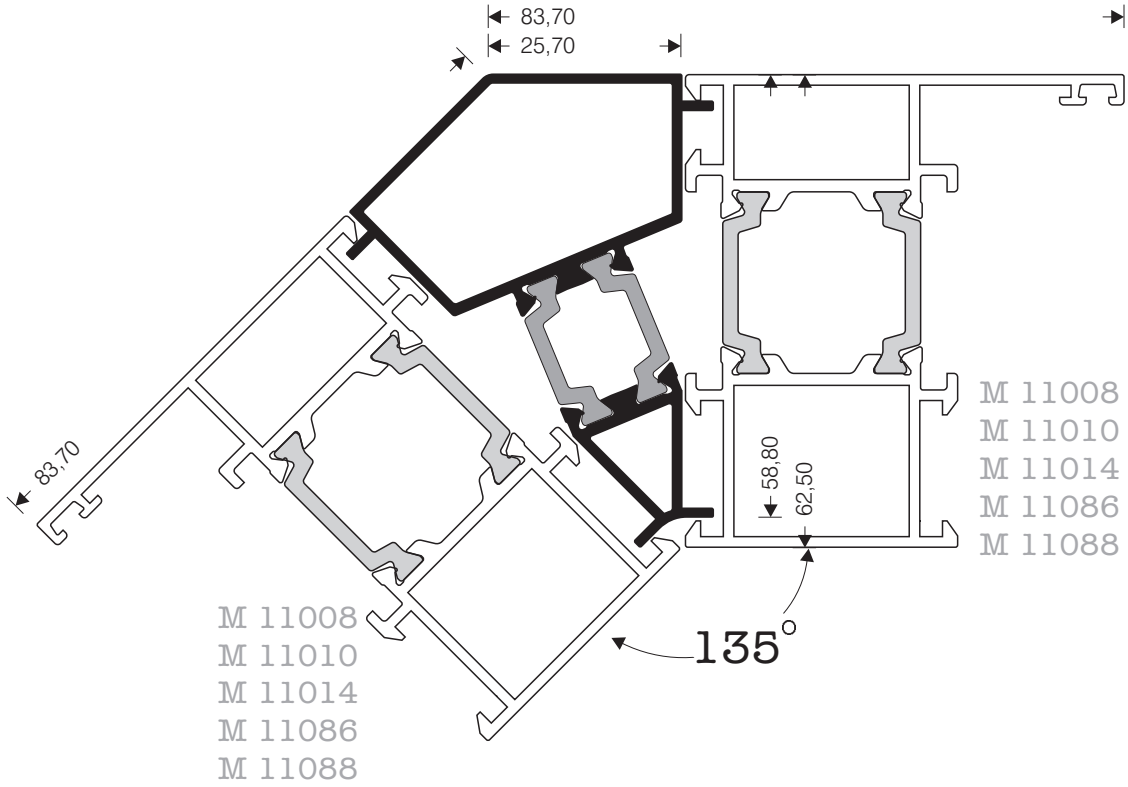

ΠΡΟΦΙΛ ΓΩΝΙΑΚΗΣ ΚΑΤΑΣΚΕΥΗΣ 90° , ΚΑΜΠΥΛΟ
CORNER PROFILE ROUND 90°

M 11096

W=1619 gr/m

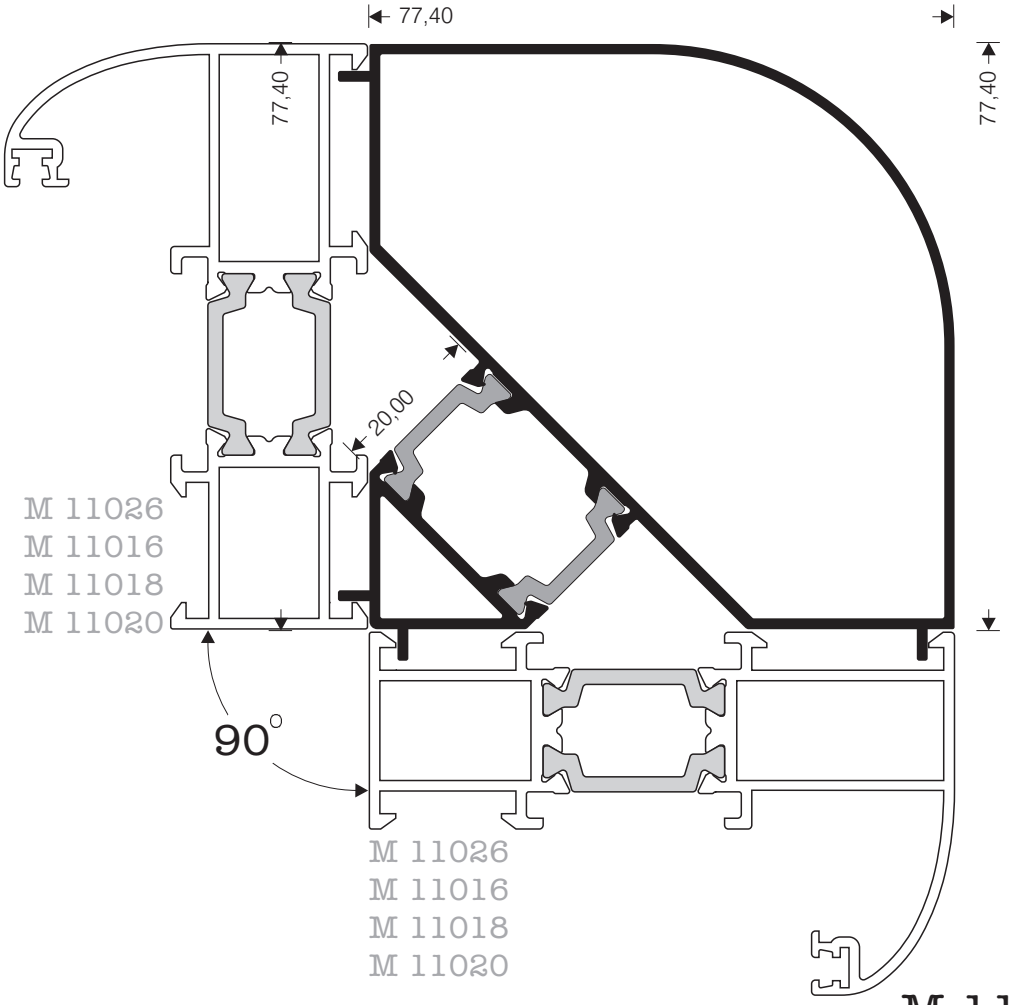

ΠΡΟΦΙΛ ΓΩΝΙΑΚΗΣ ΚΑΤΑΣΚΕΥΗΣ 135° , ΚΑΜΠΥΛΟ
CORNER PROFILE ROUND 135°

M 11094

W= 1141 gr/m

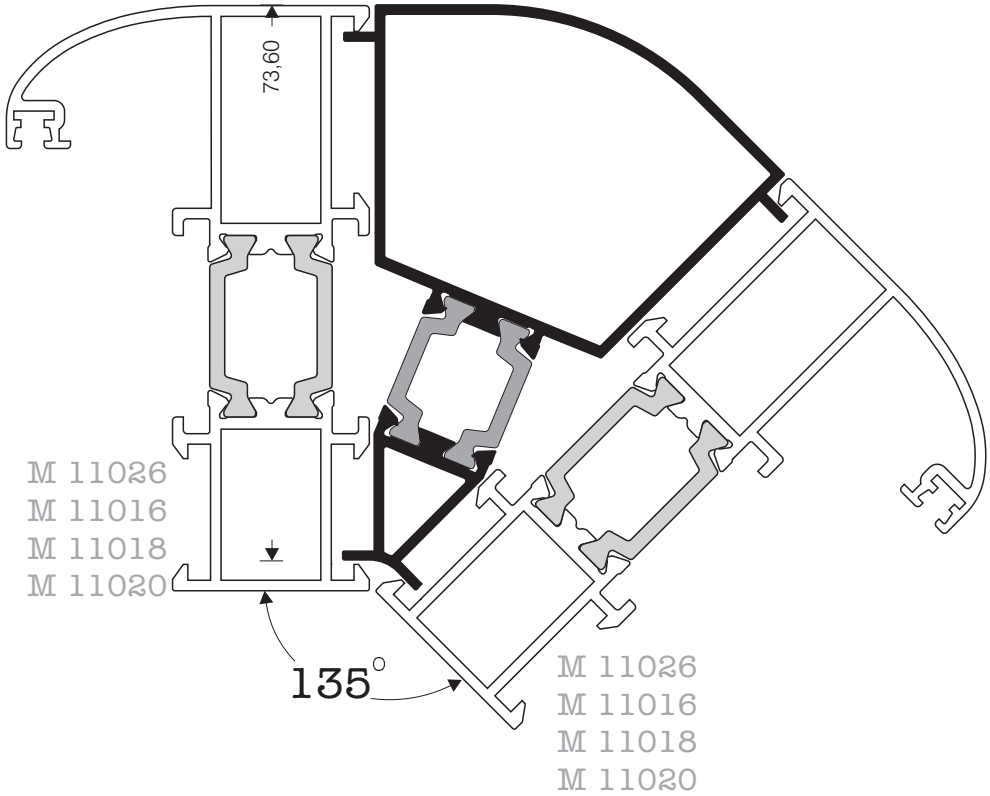

M 11178

W=1251 gr/m

ΚΟΛΩΝΑ ΓΩΝΙΑΚΩΝ ΚΑΤΑΣΚΕΥΩΝ
CIRCULAR COLUMN FOR VARIABLE ANGLES

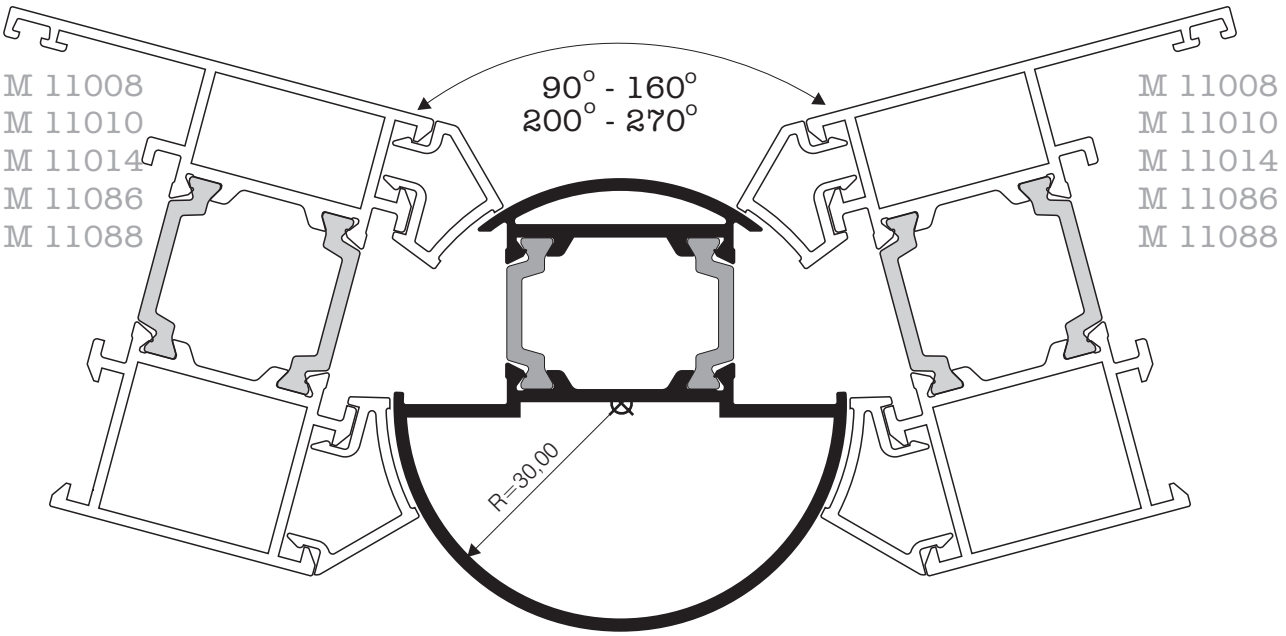

M 11180

W=182 gr/m

ΚΟΥΜΠΩΜΑ ΙΣΙΑΣ ΚΑΣΑΣ ΓΙΑ ΓΩΝΙΑΚΕΣ ΚΑΤΑΣΚΕΥΕΣ
ADJOINING PROFILE FOR CIRCULAR COLUMN

M 11182

W=272 gr/m

ΚΟΥΜΠΩΜΑ ΚΑΜΠΥΛΗΣ ΚΑΣΑΣ ΓΙΑ ΓΩΝΙΑΚΕΣ ΚΑΤΑΣΚΕΥΕΣ
ADJOINING PROFILE FOR CIRCULAR COLUMN

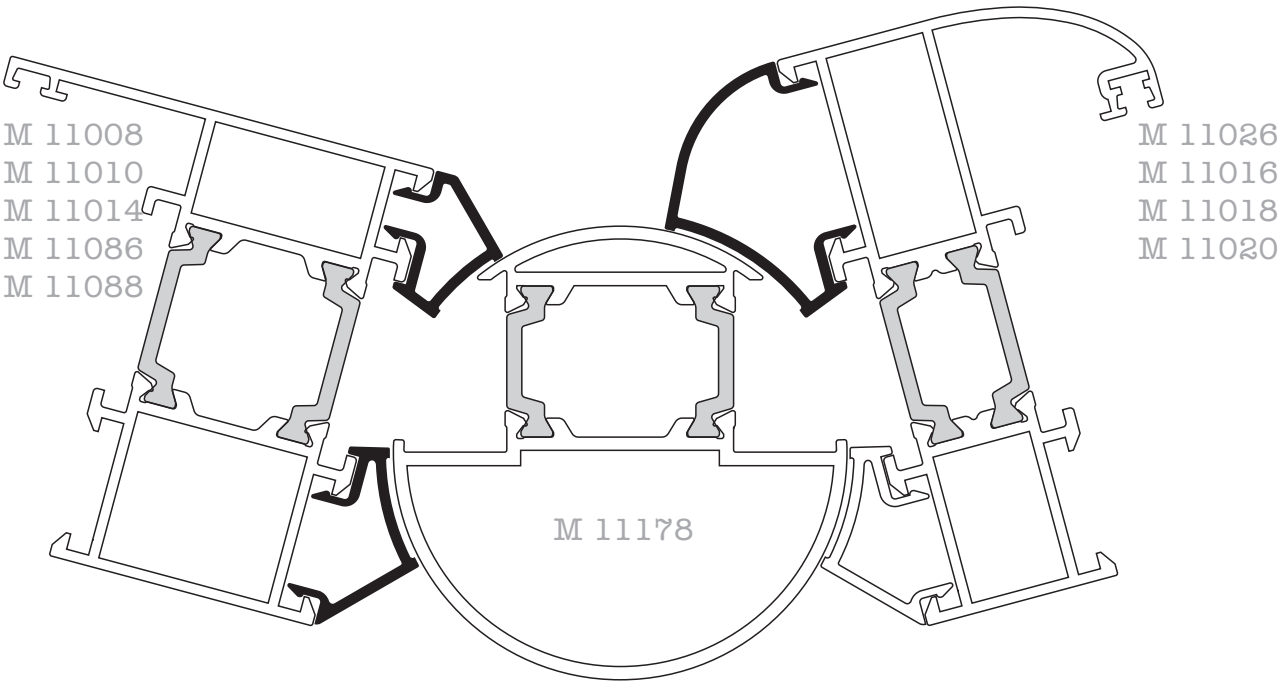

M 11181

W=192 gr/m

ΚΟΥΜΠΩΜΑ ΙΣΙΑΣ ΚΑΣΑΣ ΓΙΑ ΓΩΝΙΑΚΗ ΚΑΤΑΣΚΕΥΗ
ADJOINING PROFILE FOR CIRCULAR COLUMN

ΦΥΛΛΟ ΠΕΡΙΣΤΡΕΦΟΜΕΝΟΥ
SASH FOR PIVOTING WINDOW

M 11148

W=1671 gr/m

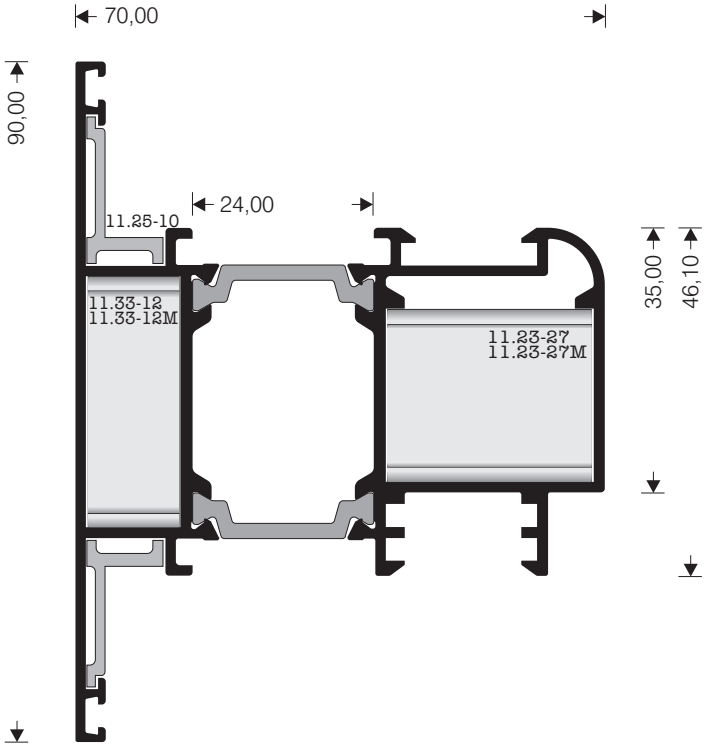

ΜΠΙΝΙ ΠΕΡΙΣΤΡΕΦΟΜΕΝΟΥ
ADJOINING PROFILE FOR PIVOTING WINDOW

M 11152

W=1345 gr/m

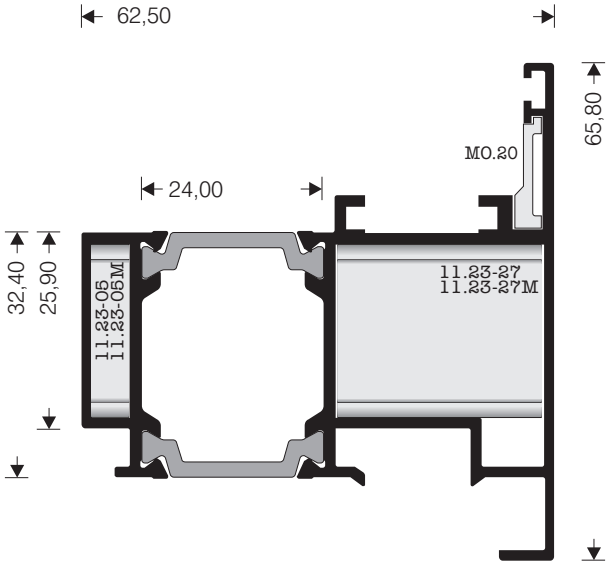

11..**** - Πρεσσαριστη γωνια **11.**.**M** - Μηχανικη γωνια
11..**** - Punching corner **11.**.**M** - Mechanical corner

M 11198

W= 1160 gr/m

ΜΠΙΝΙ ΕΙΣΟΔΟΥ ΑΝΟΙΓΟΜΕΝΗΣ ΠΡΟΣ ΤΑ ΜΕΣΑ
ADJOINING PROFILE OPENING INSIDE ROUND

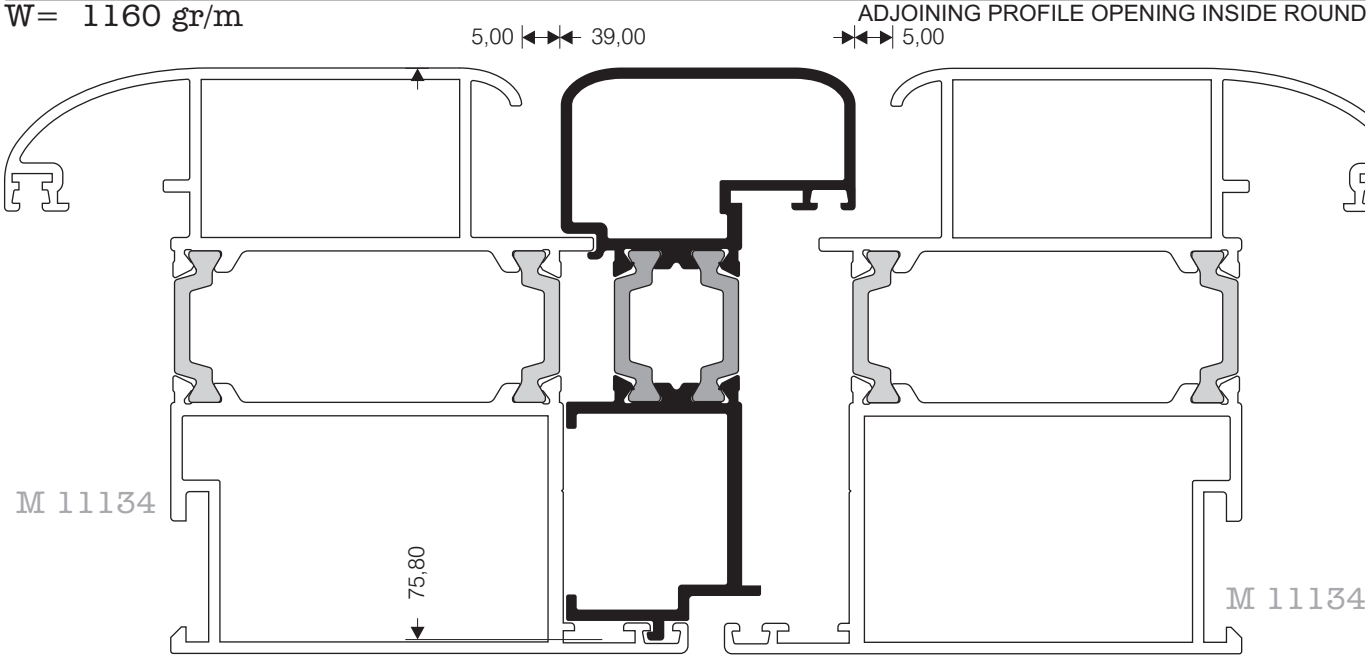

M 11156

W= 993 gr/m

ΜΠΙΝΙ ΕΙΣΟΔΟΥ ΑΝΟΙΓΟΜΕΝΗΣ ΠΡΟΣ ΤΑ ΜΕΣΑ
ADJOINING PROFILE OPENING INSIDE FLAT

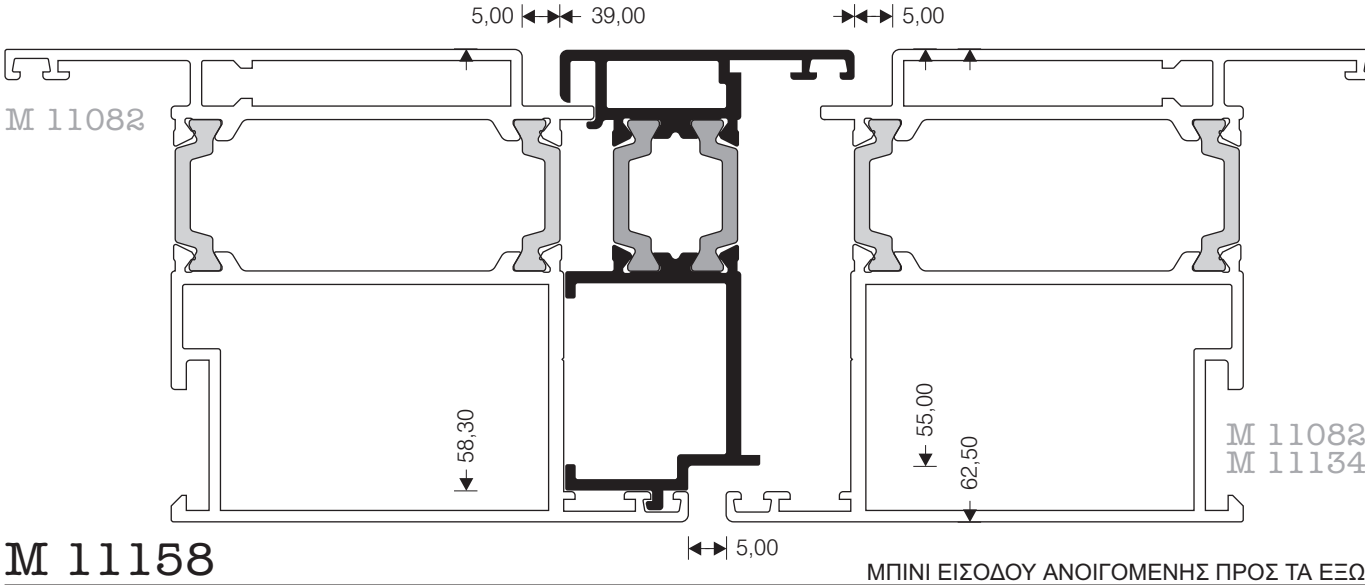

M 11158

W=1018 gr/m

ΜΠΙΝΙ ΕΙΣΟΔΟΥ ΑΝΟΙΓΟΜΕΝΗΣ ΠΡΟΣ ΤΑ ΕΞΩ
ADJOINING PROFILE OPENING OUTSIDE FLAT

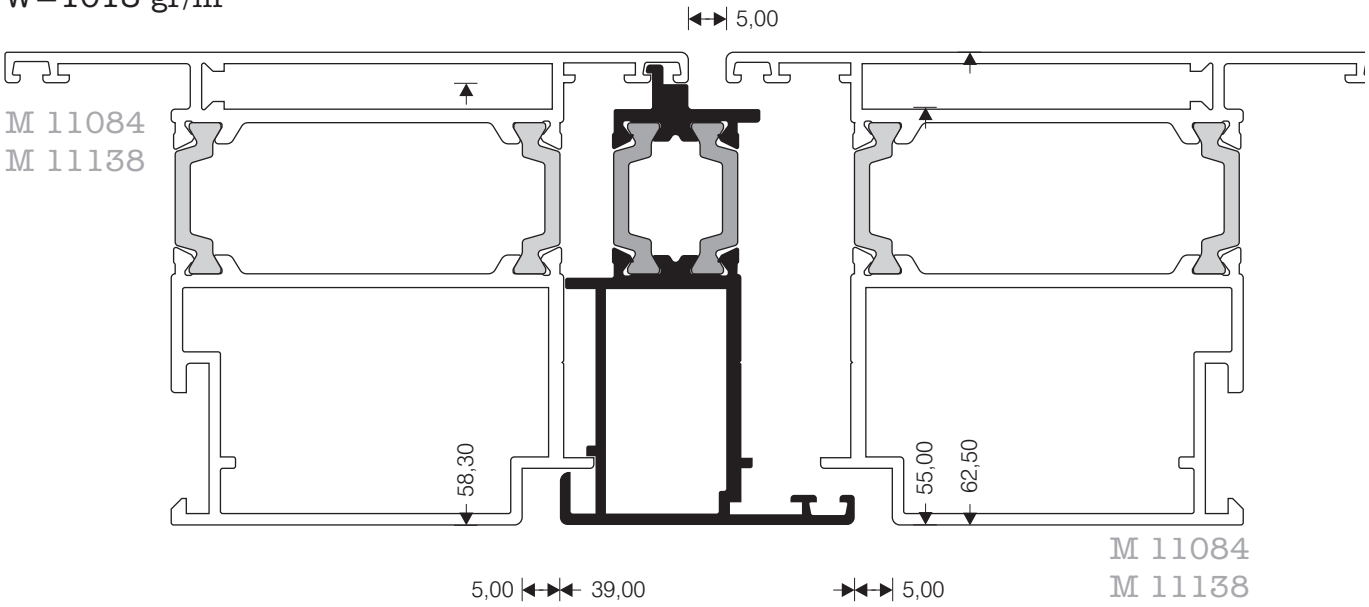

ΜΠΙΝΙ ΚΑΣΑΣ ΓΙΑ ΕΙΣΟΔΟΥ ΑΝΟΙΓΟΜΕΝΗΣ ΠΡΟΣ ΤΑ ΕΞΩ
SUPPLEMENTARY PROFILE FOR DOORS OPENING OUTSIDE

M 11162
W=1073 gr/m

ΚΟΥΜΠΩΜΑ ΕΙΣΟΔΟΥ ΑΝΟΙΓΟΜΕΝΗΣ ΠΡΟΣ ΤΑ ΜΕΣΑ
SUPPLEMENTARY PROFILE FOR DOORS OPENING INSIDE

M 11164
W= 310 gr/m

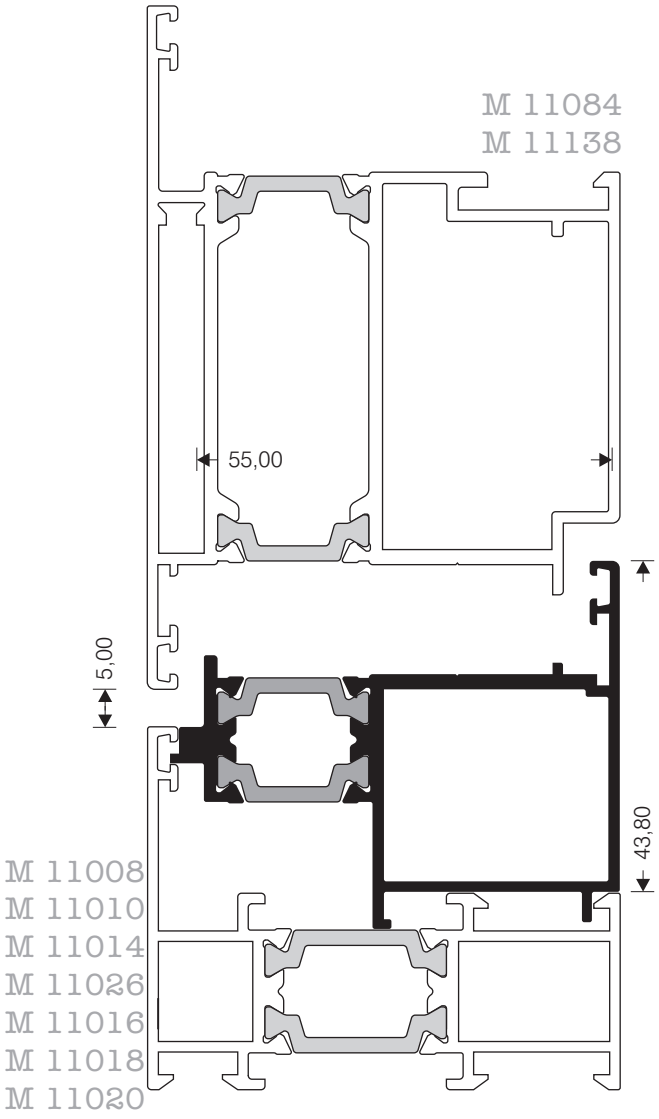

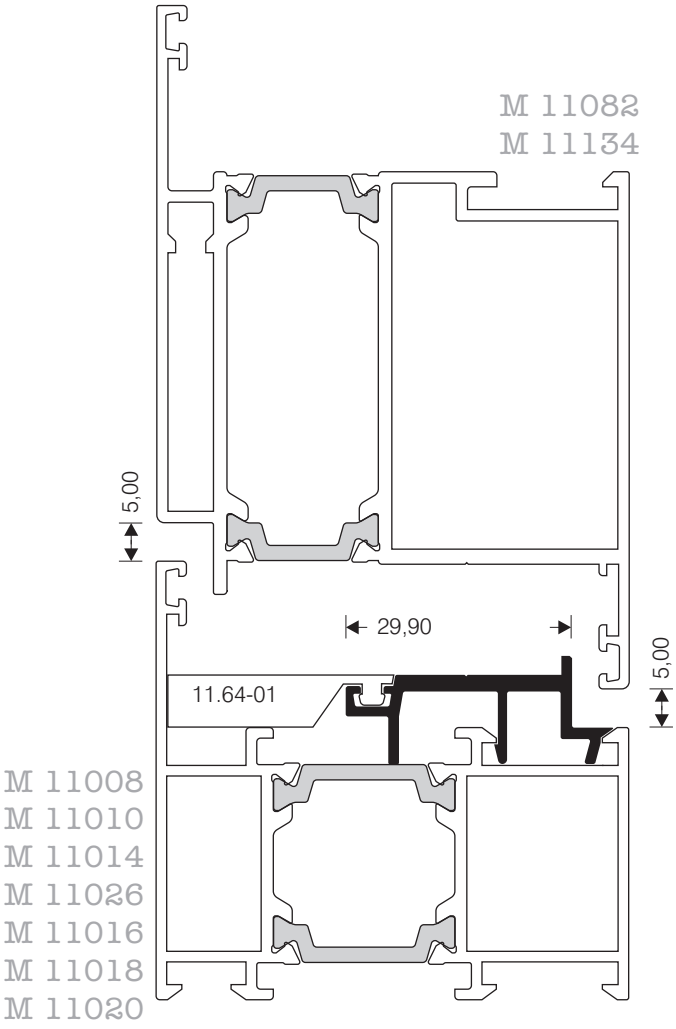

M 11170

W= 877 gr/m

ΤΕΛΕΙΩΜΑ ΦΥΛΛΩΝ ΕΙΣΟΔΟΥ (ΕΞΩ-ΜΕΣΑ)

SUPPLEMENTARY PROFILE FOR DOORS

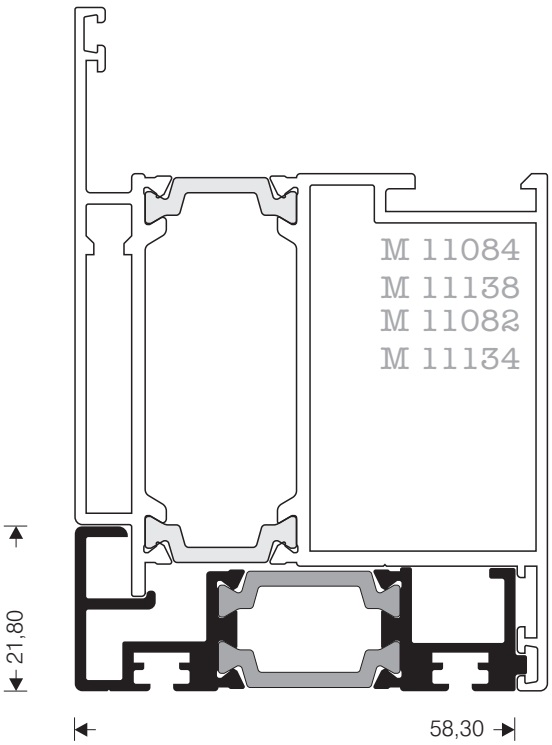

M 11270

W= 977 gr/m

ΤΕΛΕΙΩΜΑ ΦΥΛΛΩΝ ΕΙΣΟΔΟΥ (ΕΞΩ-ΜΕΣΑ)

SUPPLEMENTARY PROFILE FOR DOORS

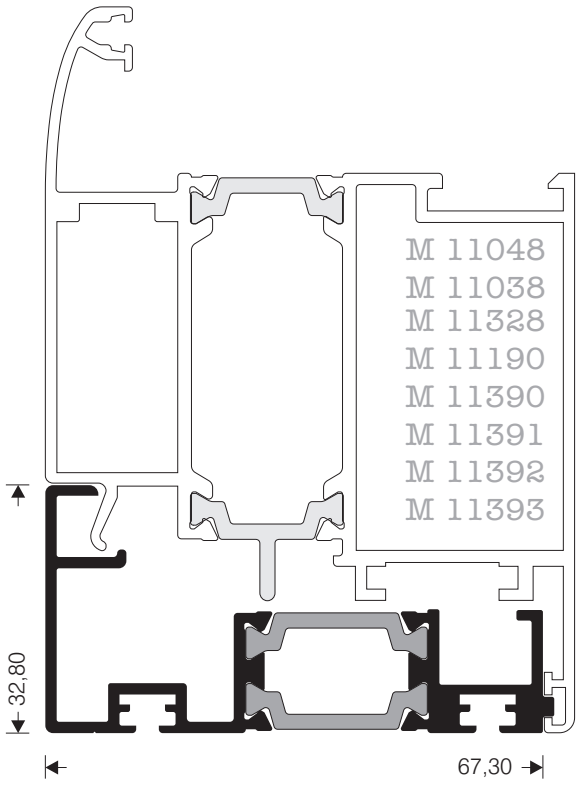

M 11174

W= 979 gr/m

ΚΑΤΩΚΑΣΙ ΧΩΝΕΥΤΟ

THRESHOLD FLUSH

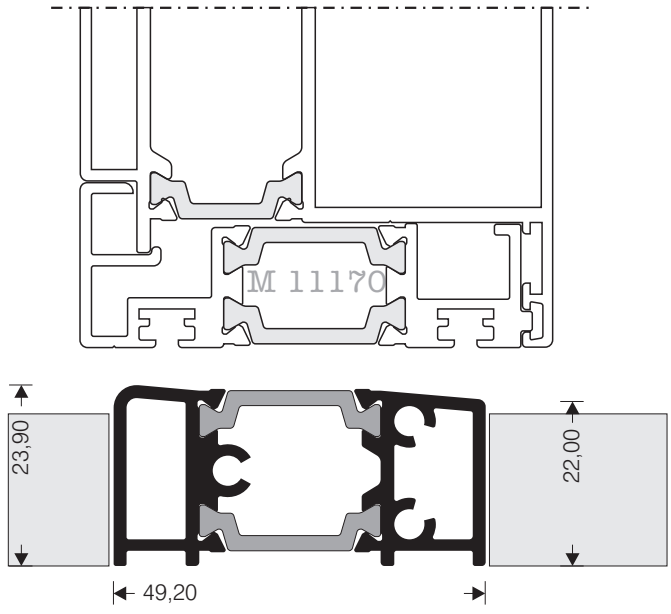

M 11172

W= 436 gr/m

ΚΑΤΩΚΑΣΙ ΕΠΙΦΑΝΕΙΑΚΟ

THRESHOLD RAISED

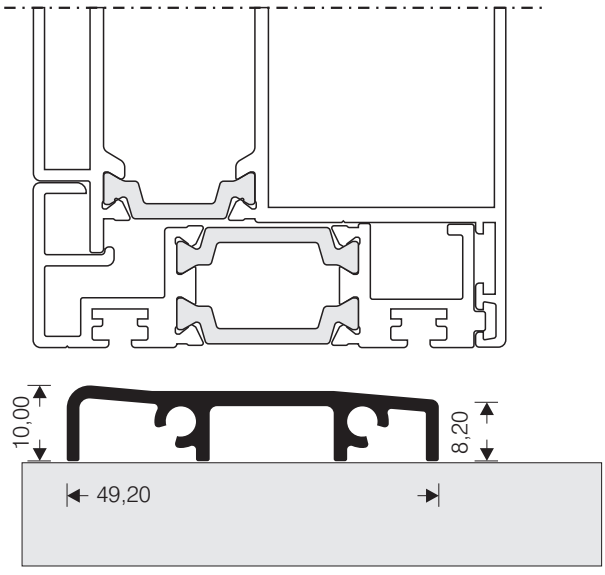

ΔΙΑΧΩΡΙΣΤΙΚΟ ΤΖΑΜΙΟΥ,ΕΞΩ **M 11113**
TRANSVERSE W= 592 gr/m

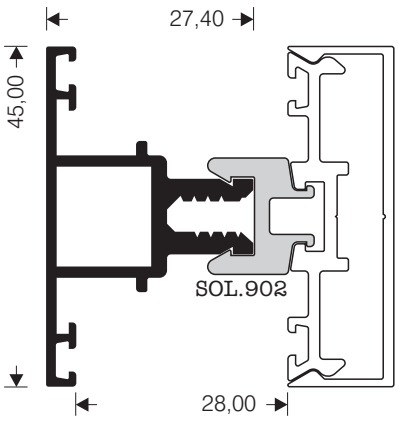

ΔΙΑΧΩΡΙΣΤΙΚΟ ΤΖΑΜΙΟΥ,ΜΕΣΑ **M 11115**
TRANSVERSE W= 338 gr/m

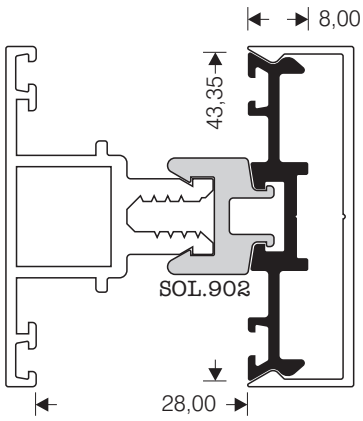

ΚΟΥΜΠΩΜΑ ΔΙΑΧΩΡΙΣΤΙΚΟΥ **M 11114**
COVER W= 249 gr/m

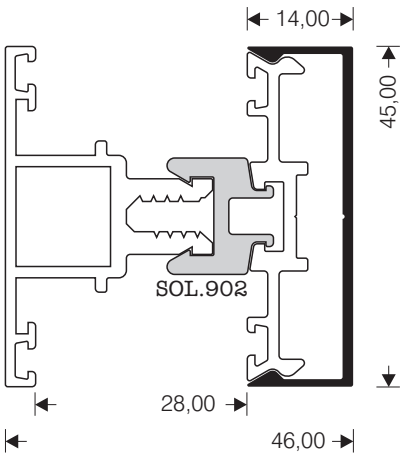

ΑΡΜΟΚΑΛΥΠΤΡΟ **M 11118**
SUPPLEMENTARY PROFILE DECORATIVE W= 324 gr/m

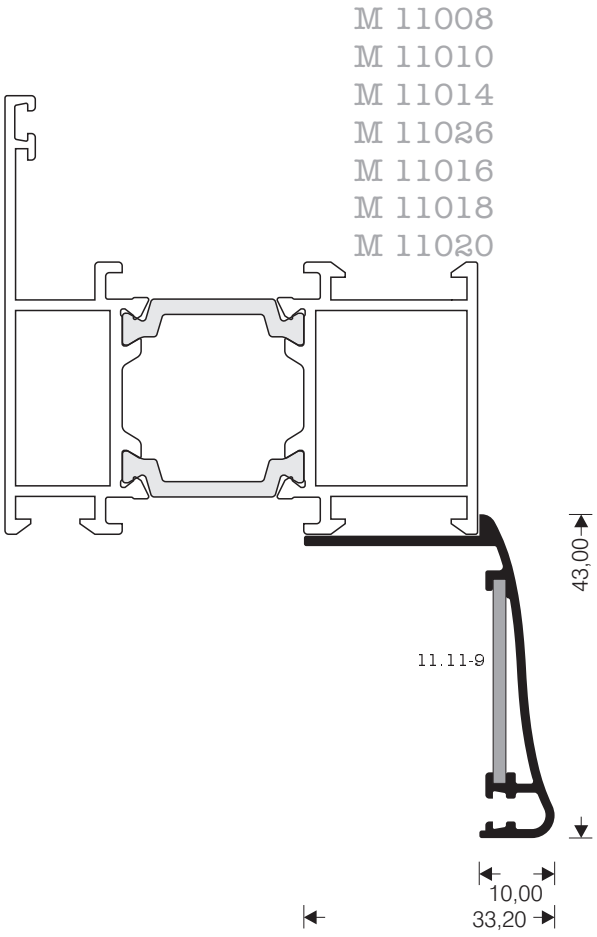

ΑΡΜΟΚΑΛΥΠΤΡΟ **M 11119**
SUPPLEMENTARY PROFILE DECORATIVE W= 379 gr/m

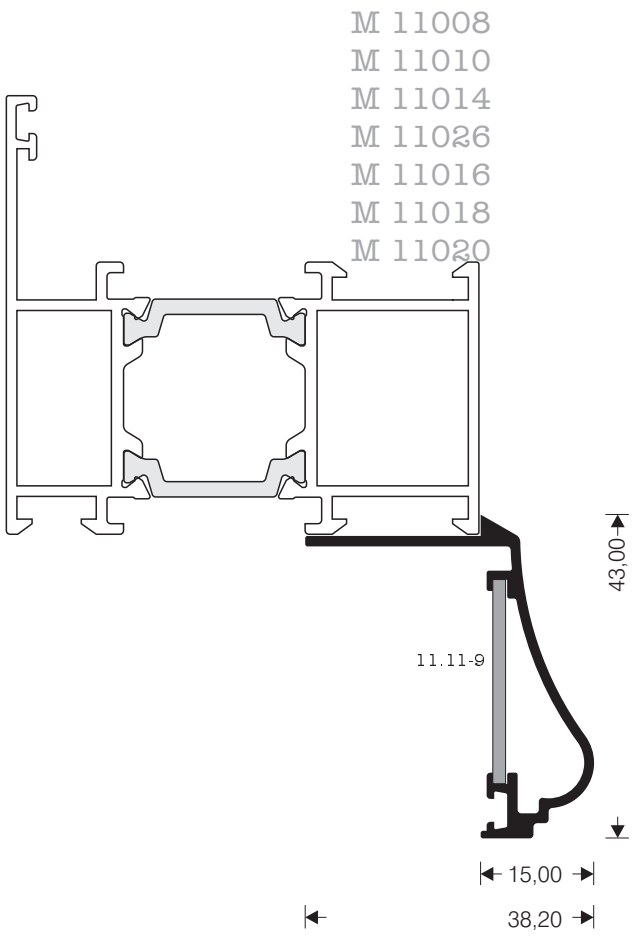

M 9313

W= 175 gr/m

ΠΗΧΑΚΙ ΙΣΙΟ
GLAZING BEAD

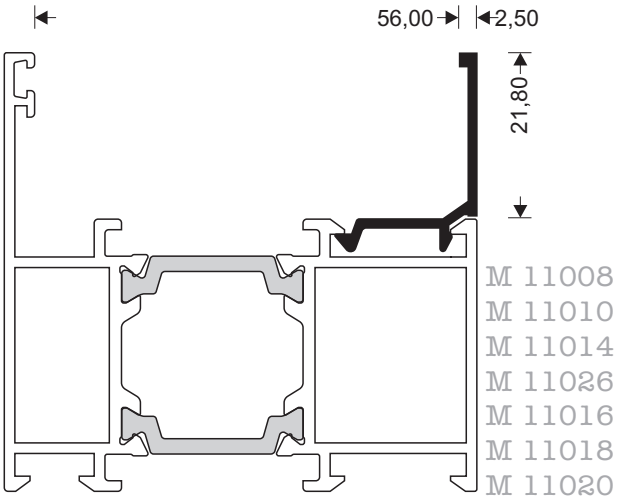

M 946

W= 229 gr/m

ΠΗΧΑΚΙ ΙΣΙΟ
GLAZING BEAD

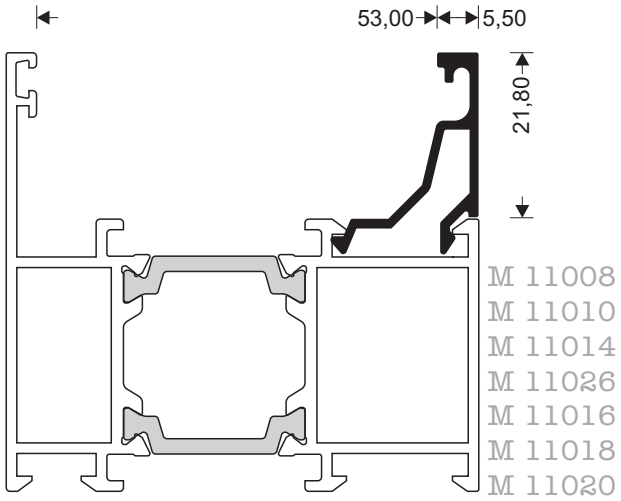

M 9312

W= 242 gr/m

ΠΗΧΑΚΙ ΙΣΙΟ
GLAZING BEAD

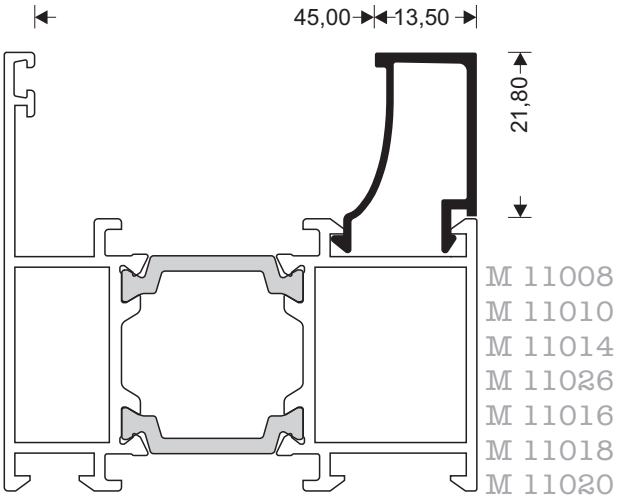

M 11451

W= 301 gr/m

ΠΗΧΑΚΙ ΙΣΙΟ
GLAZING BEAD

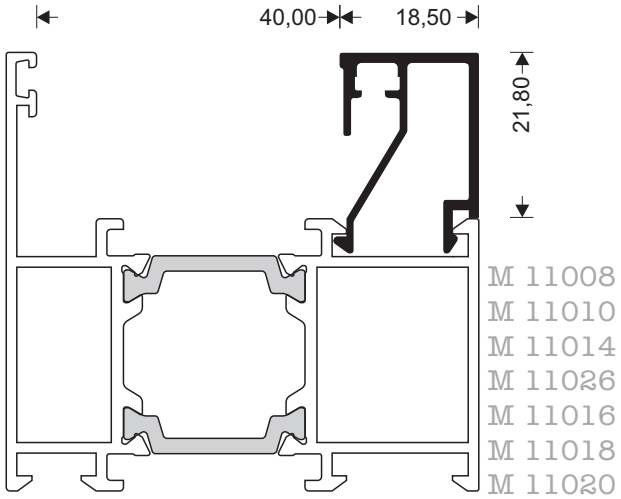

M 11452

W= 313 gr/m

ΠΗΧΑΚΙ ΙΣΙΟ
GLAZING BEAD

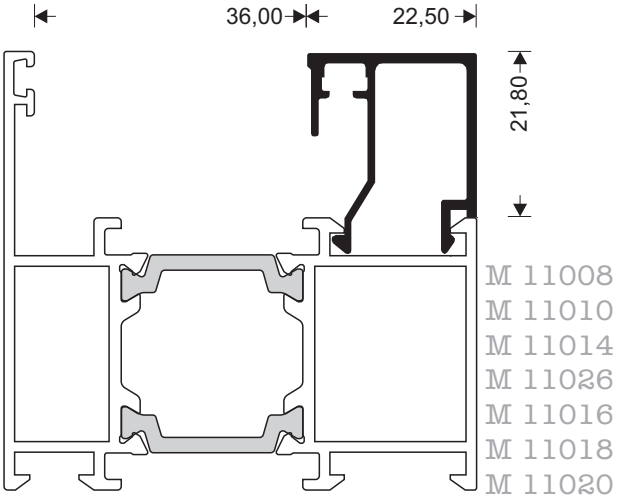

M 11453

W= 328 gr/m

ΠΗΧΑΚΙ ΙΣΙΟ
GLAZING BEAD

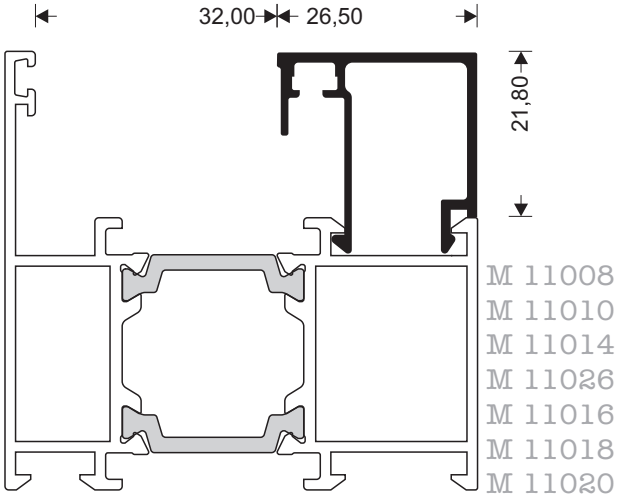

ΠΗΧΑΚΙ ΙΣΙΟ
GLAZING BEAD

M 11454

W= 346 gr/m

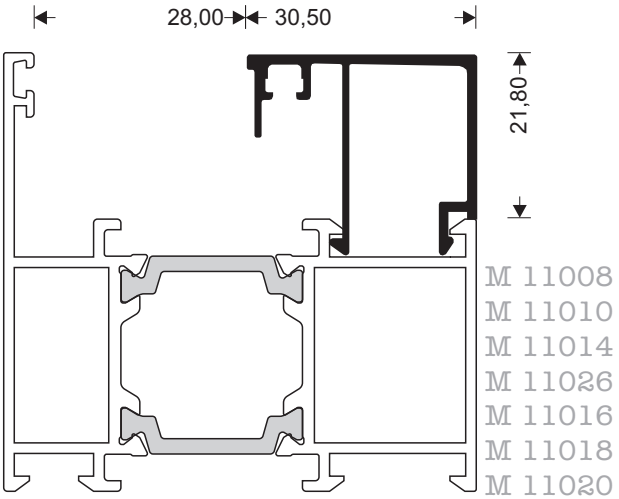

ΠΗΧΑΚΙ ΚΑΜΠΥΛΟ
GLAZING BEAD

M 11462

W= 297 gr/m

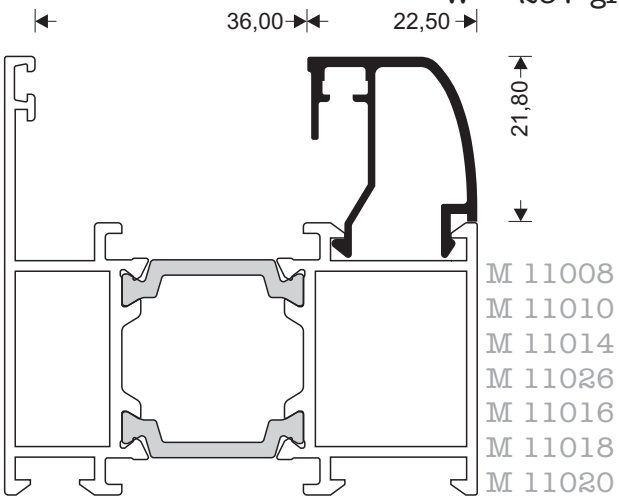

ΠΗΧΑΚΙ ΚΑΜΠΥΛΟ
GLAZING BEAD

M 11463

W= 311 gr/m

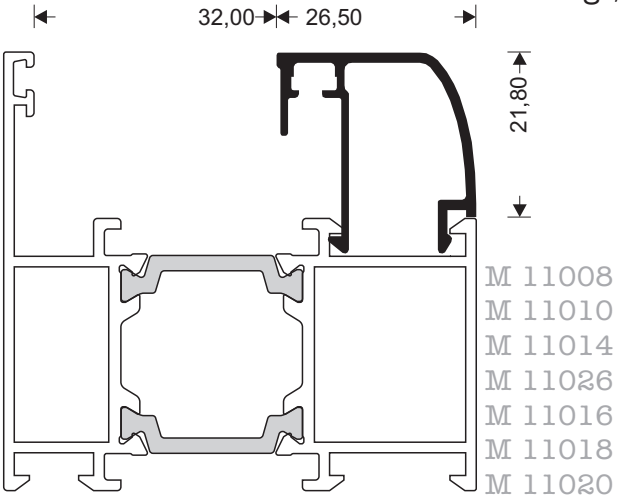

ΠΗΧΑΚΙ ΚΑΛΥΠΤΡΑ
GLAZING BEAD

M 11464

W= 330 gr/m

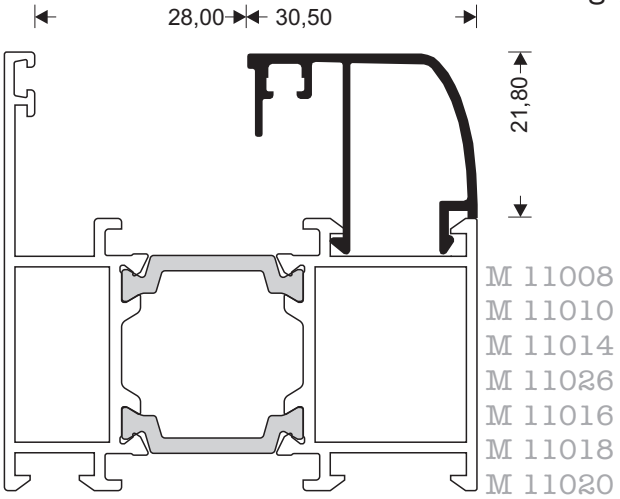

ΠΗΧΑΚΙ ΚΑΛΥΠΤΡΑ
FINISHING END COVER

M 11120

W= 427 gr/m

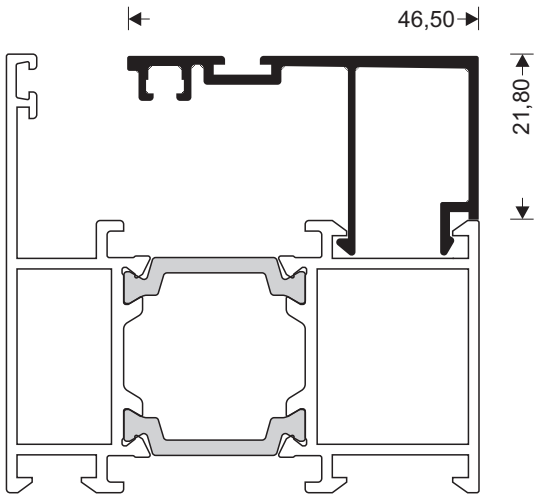

ΠΗΧΑΚΙ ΚΑΛΥΠΤΡΑ
FINISHING END COVER

M 11121

W= 418 gr/m

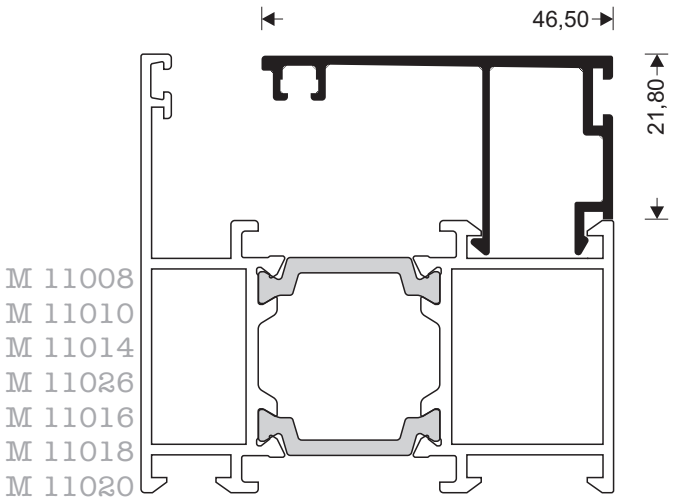

M 11474

W=1245 gr/m

ΛΕΚΑΝΗ ΑΠΟΡΡΟΗΣ
WATER EVACUATION PROFILE

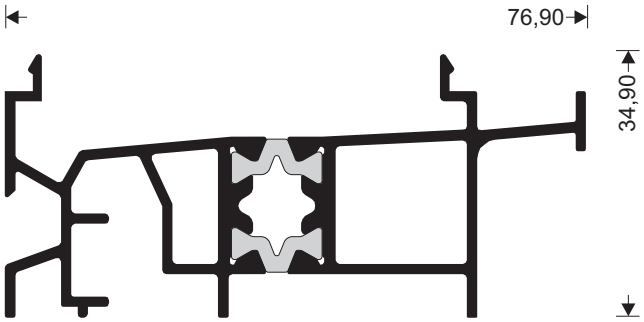

M 11475

W= 373 gr/m

ΠΕΡΒΑΖΙ ΑΠΟΡΡΟΗΣ ΜΙΚΡΟ
DRIP SILL SMALL

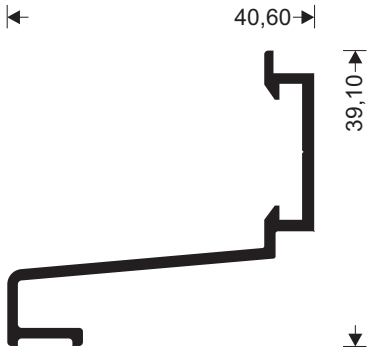

M 11477

W=818 gr/m

ΠΕΡΒΑΖΙ ΑΠΟΡΡΟΗΣ ΜΕΓΑΛΟ
DRIP SILL LARGE

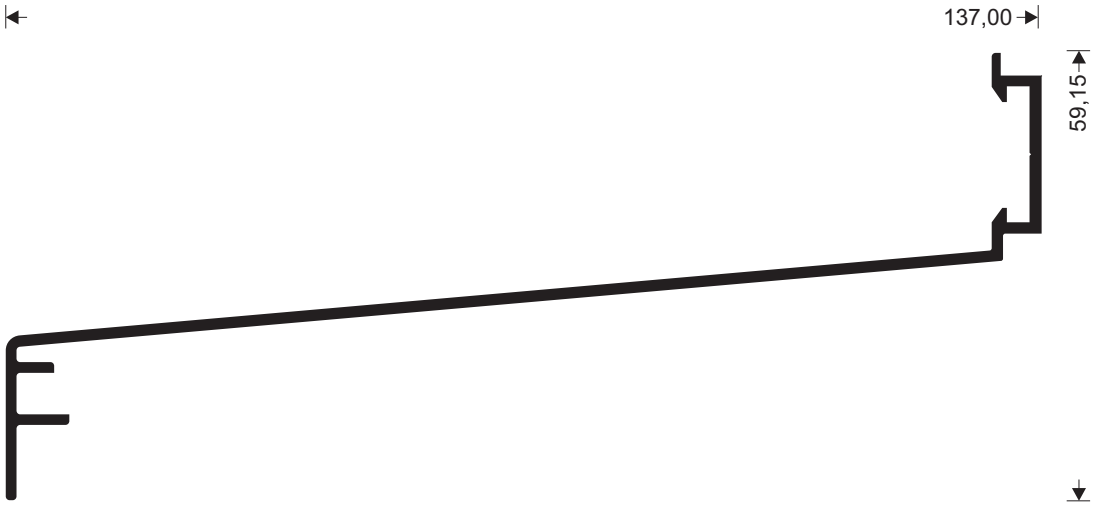

M 11473

W=103 gr/m

ΤΕΛΕΙΩΜΑ ΠΕΡΒΑΖΙΟΥ
END CAP DRIP SILL

M 11480

W= 282 gr/m

ΠΡΟΦΙΛ ΣΥΝΔΕΣΜΟΥ ΔΙΑΣΤΟΛΩΝ
EXTENSION PROFILE

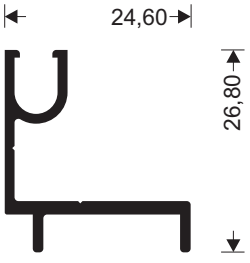

M 11501

W=1053 gr/m

ΠΡΟΦΙΛ ΣΥΝΕΡΓΑΣΙΑΣ ΑΝΟΙΓΩΜΕΝΩΝ - ΣΥΡΡΟΜΕΝΩΝ
SUPPLEMENTARY PROFILE OPENING-SLIDING

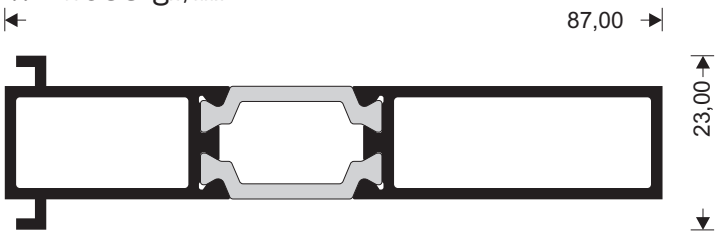

ΝΕΡΟΧΥΤΗΣ
WATER CAP

M 9317

W= 180 gr/m

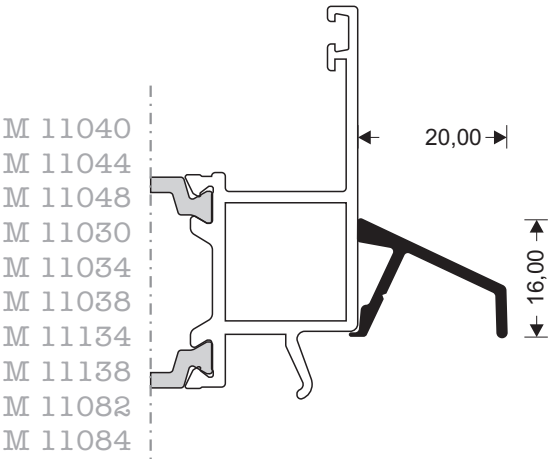

ΝΕΡΟΧΥΤΗΣ
WATER CAP

M 11116

W= 183 gr/m

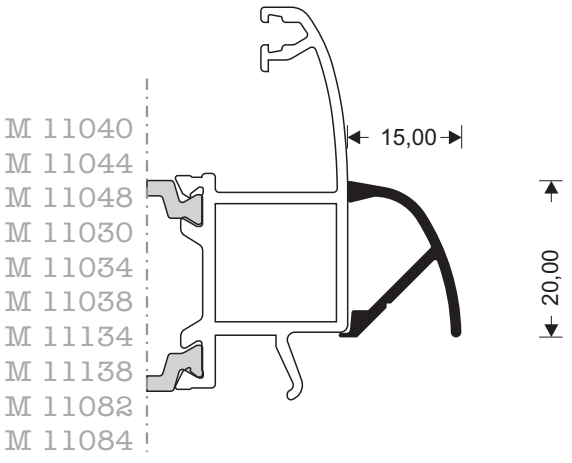

ΑΡΜΟΚΑΛΥΠΤΡΟ
SUPPLEMENTARY PROFILE DECRATIVE

M 6001

W= 148 gr/m

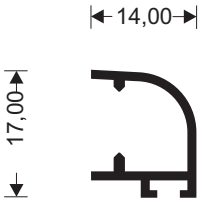

ΑΡΜΟΚΑΛΥΠΤΡΟ
SUPPLEMENTARY PROFILE DECRATIVE

M 216

W= 348 gr/m

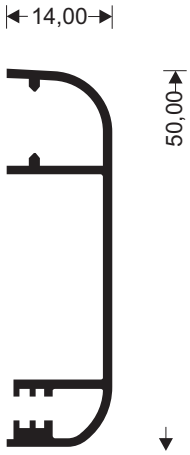

ΣΥΜΠΛΗΡΩΜΑΤΙΚΟ ΠΡΟΦΙΛ ΕΙΣΟΔΟΥ
SUPPLEMENTARY PROFILE DOORS

M 11472

W=314 gr/m

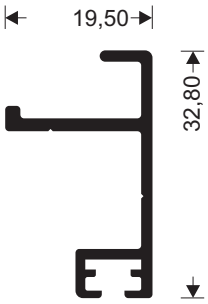

ΣΥΜΠΛΗΡΩΜΑΤΙΚΟ ΠΡΟΦΙΛ ΕΙΣΟΔΟΥ
SUPPLEMENTARY PROFILE DOORS

M 11471

W=231 gr/m

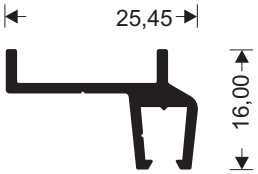

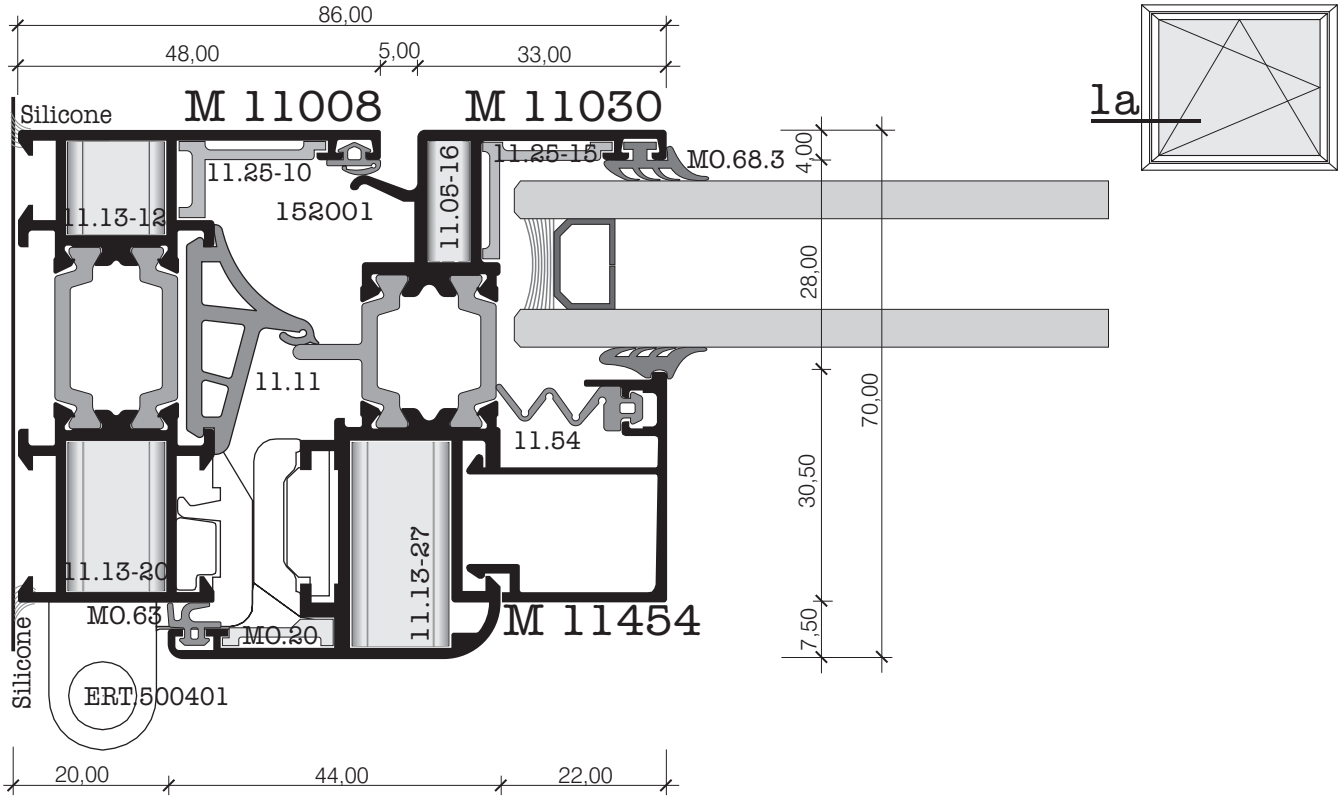
86,00
48,00
5,00
33,00
M 11008
M 11030
Silicone
11.25-10
152001
11.05-16
11.25-15
MO.68.3
4,00
28,00
70,00
30,50
7,50
11.13-12
11.11
11.54
11.13-20
MO.63
MO.20
11.13-27
M 11454
Silicone
ERT 500401
20,00
44,00
22,00
la

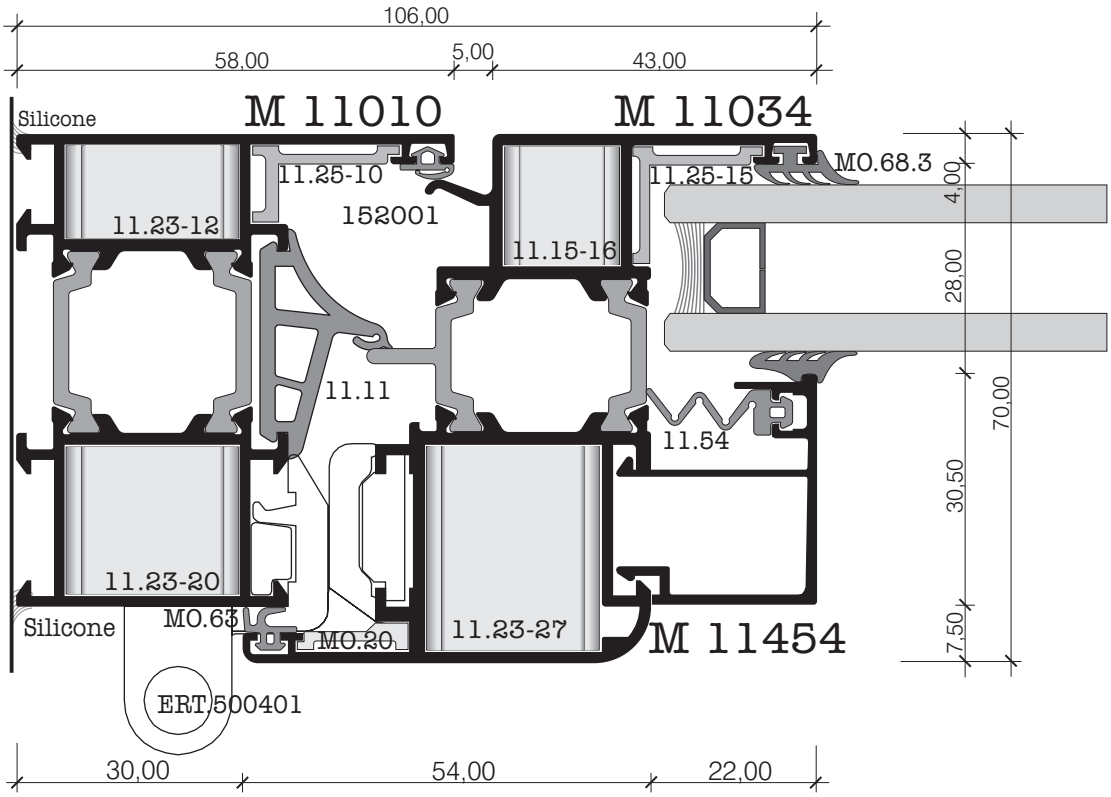
106,00
58,00
5,00
43,00
M 11010
M 11034
Silicone
11.25-10
152001
11.25-15
MO.68.3
4,00
28,00
70,00
30,50
7,50
11.23-12
11.15-16
11.11
11.54
11.23-20
MO.63
MO.20
11.23-27
M 11454
Silicone
ERT 500401
30,00
54,00
22,00
l

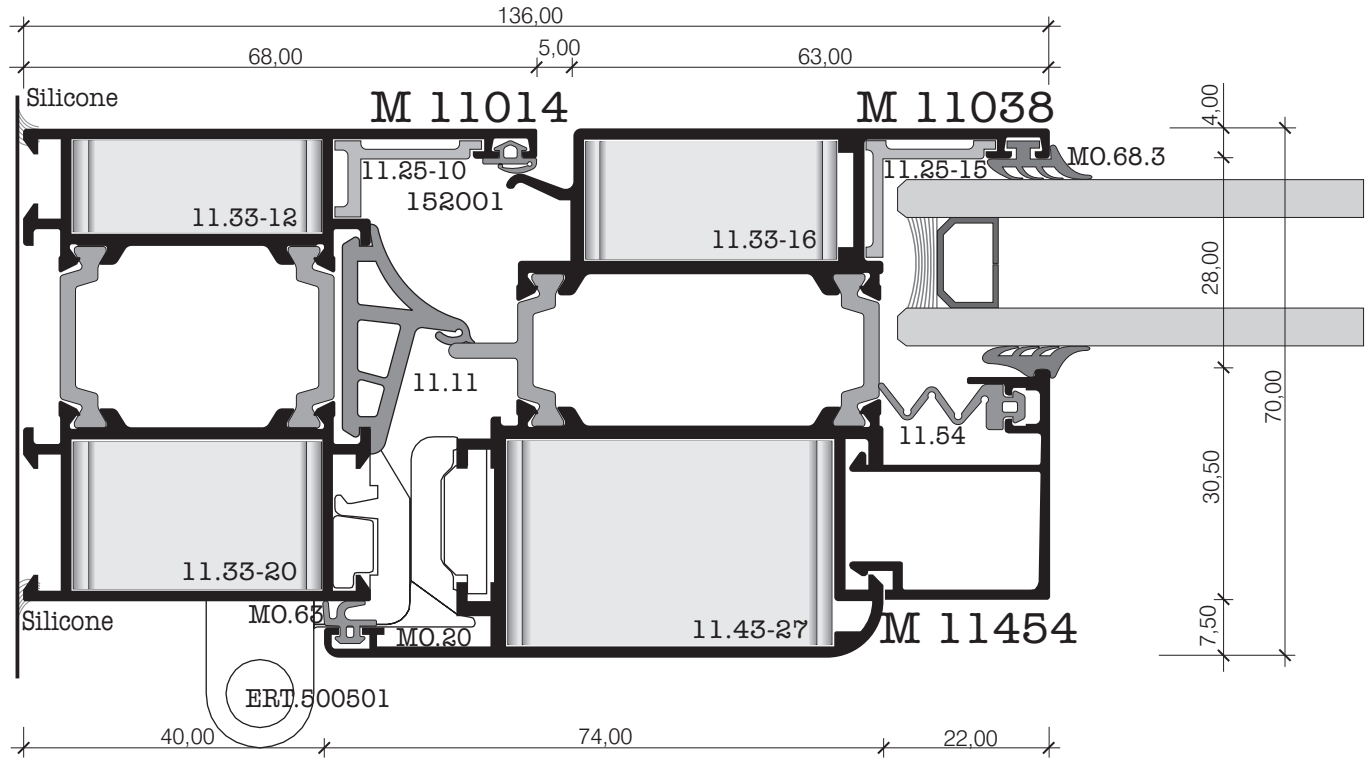

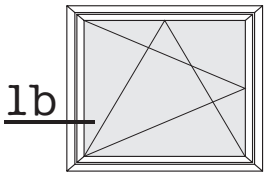

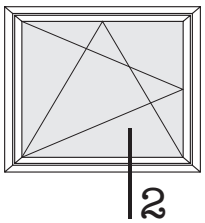

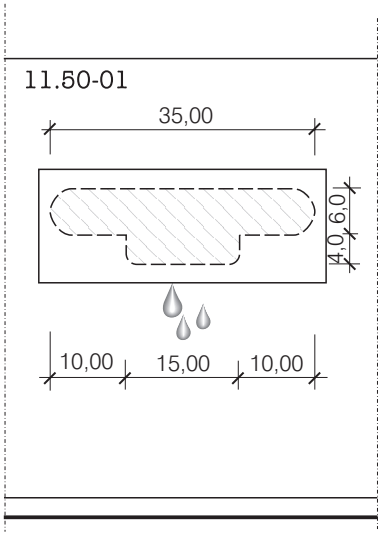

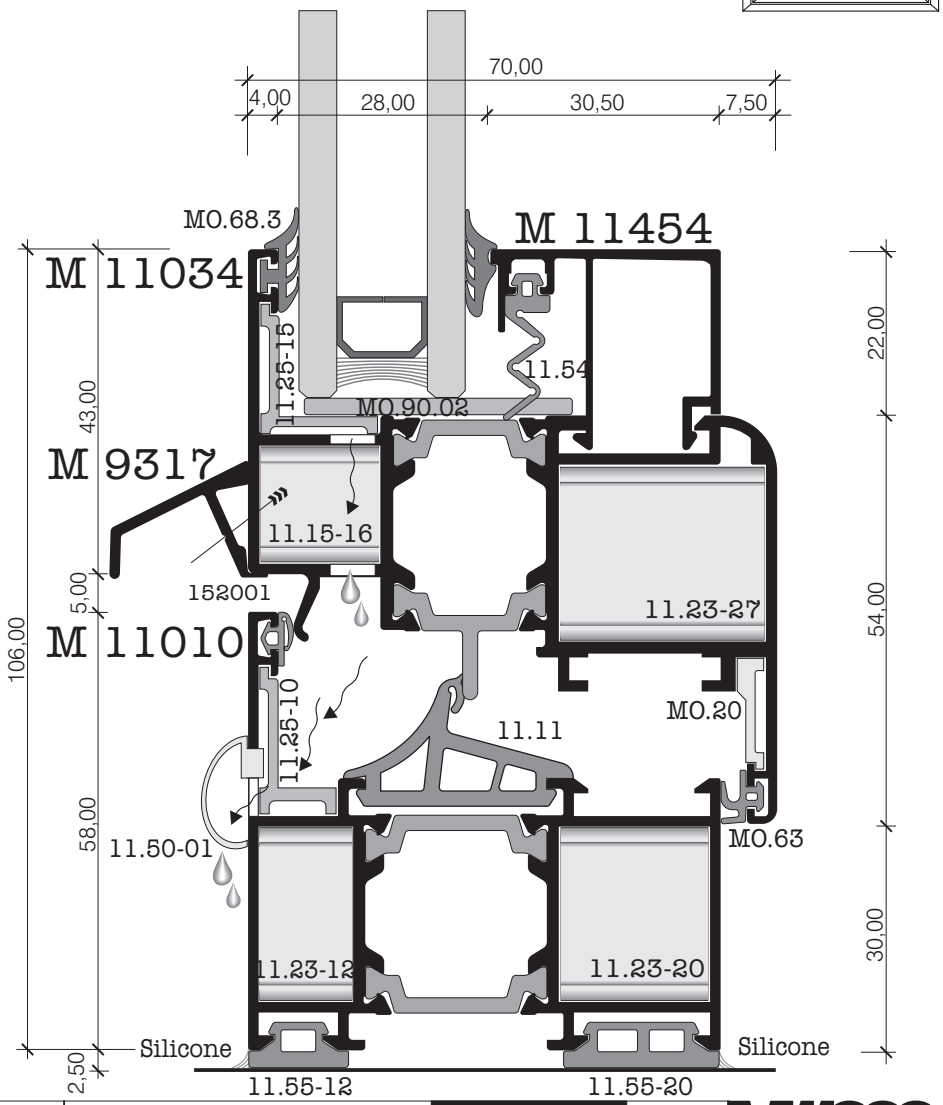

R = 1: 1	Sections 1b , 2	M11000 Alutherm PLUS		

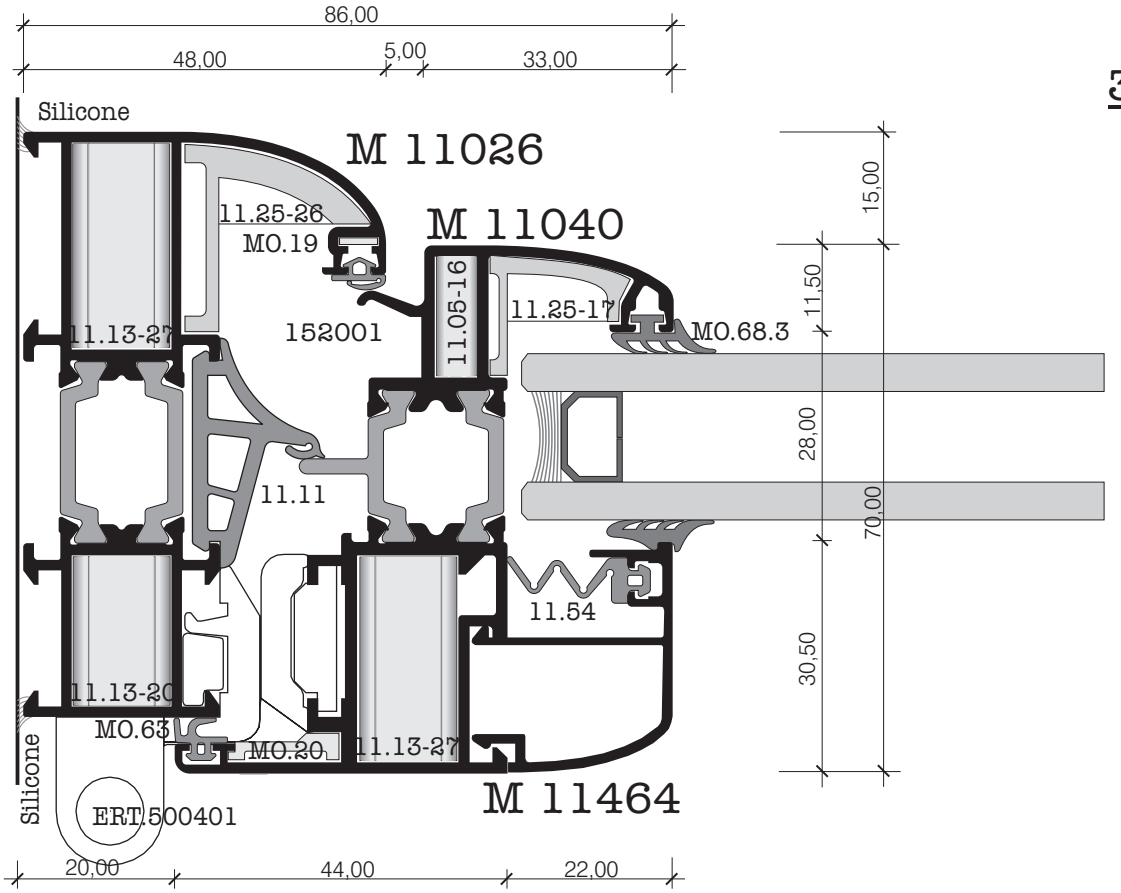
86,00
48,00
5,00
33,00
Silicone
M 11026
11.25-26
MO.19
M 11040
11.05-16
11.25-17
MO.68.3
11.13-27
152001
11.11
11.54
11.13-20
MO.63
MO.20
11.13-27
Silicone
ERT.500401
M 11464
20,00
44,00
22,00
15,00
11,50
28,00
70,00
30,50

3a

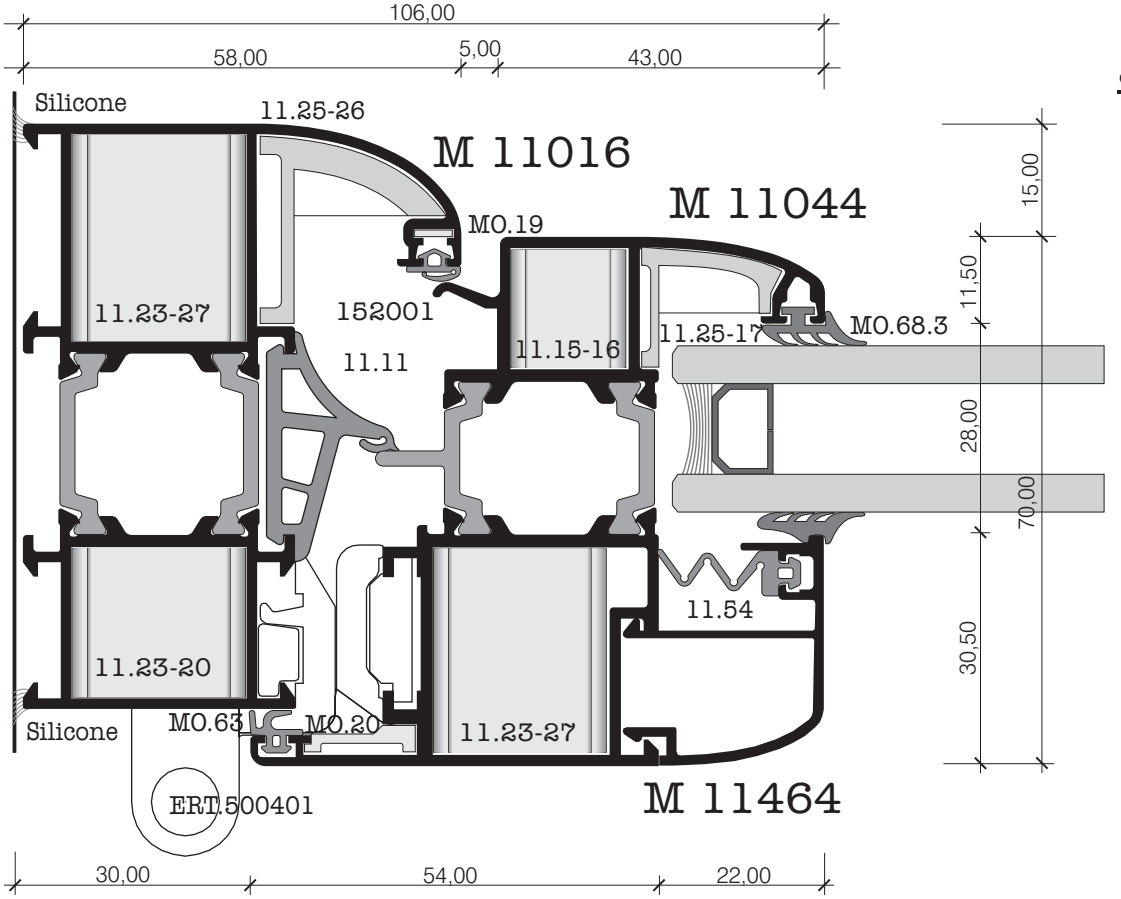
106,00
58,00
5,00
43,00
Silicone
11.25-26
M 11016
M 11044
MO.19
11.23-27
152001
11.11
11.15-16
11.25-17
MO.68.3
11.54
11.23-20
MO.63
MO.20
11.23-27
Silicone
ERT.500401
M 11464
30,00
54,00
22,00
15,00
11,50
28,00
70,00
30,50

3

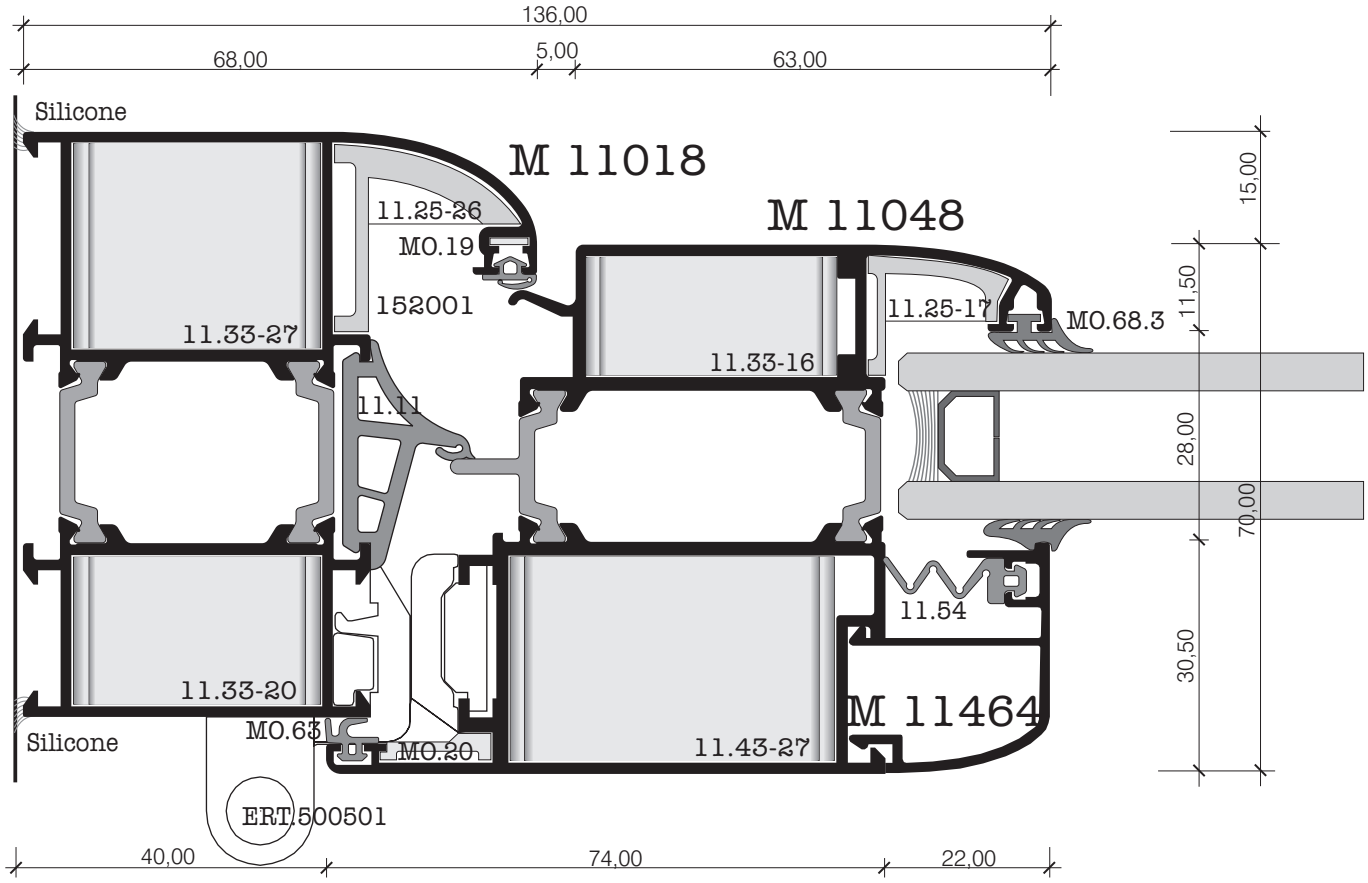
136,00
68,00
5,00
63,00
Silicone
M 11018
M 11048
11.25-26
MO.19
152001
11.33-27
11.33-16
11.25-17
MO.68.3
11.11
11.54
11.33-20
M 11464
MO.63
MO.20
11.43-27
Silicone
ERT.500501
15,00
11,50
28,00
70,00
30,50
40,00
74,00
22,00

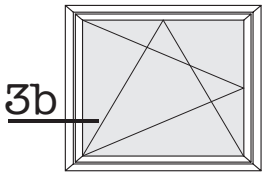
3b

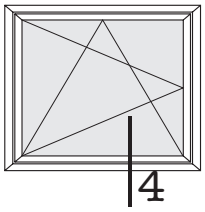
4

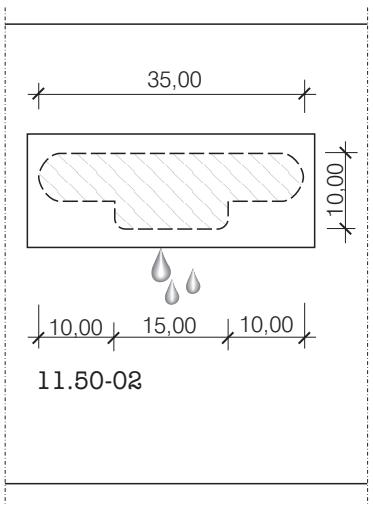
35,00
10,00
10,00
15,00
10,00
11.50-02

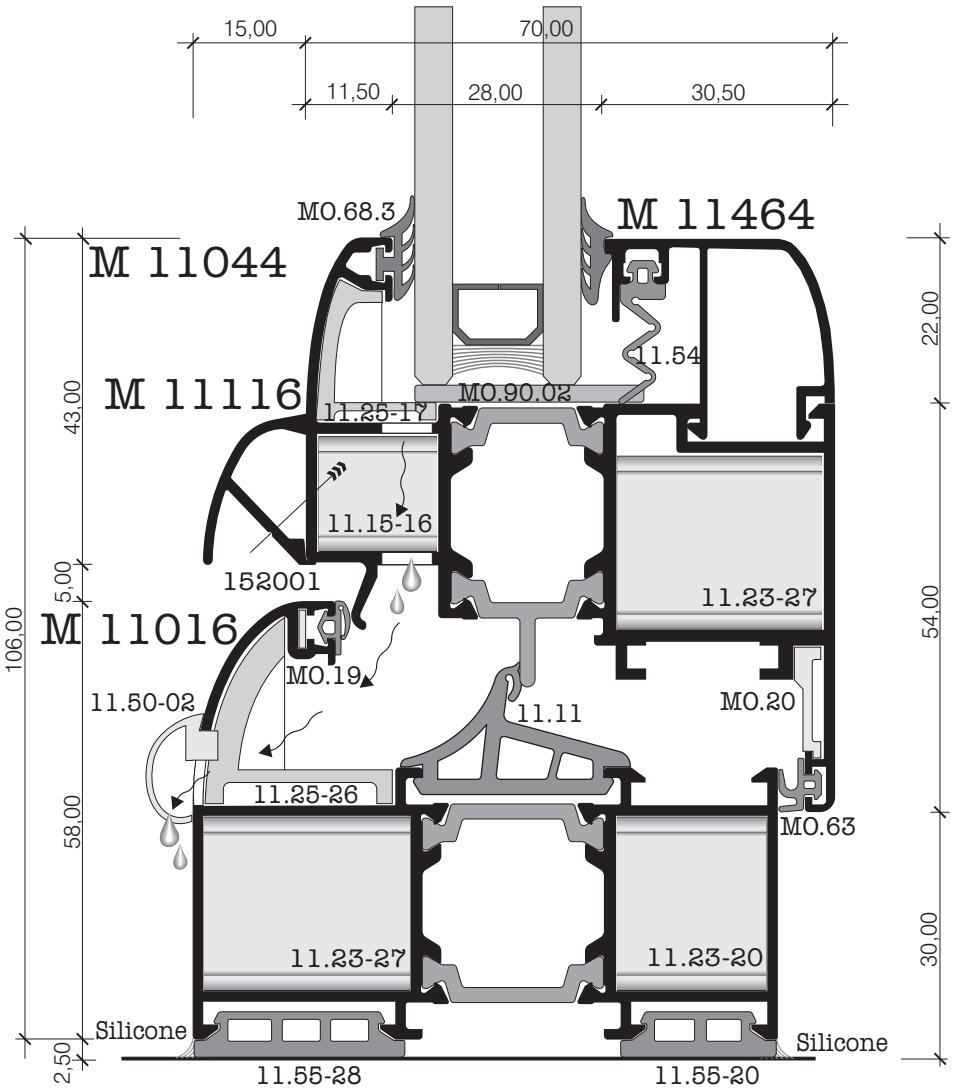
15,00
70,00
11,50
28,00
30,50
MO.68.3
M 11464
M 11044
11.54
M 11116
MO.90.02
11.25-17
43,00
11.15-16
5,00
152001
11.23-27
106,00
M 11016
MO.19
11.50-02
11.11
MO.20
11.25-26
MO.63
58,00
11.23-27
11.23-20
Silicone
Silicone
2,50
11.55-28
11.55-20
22,00
54,00
30,00

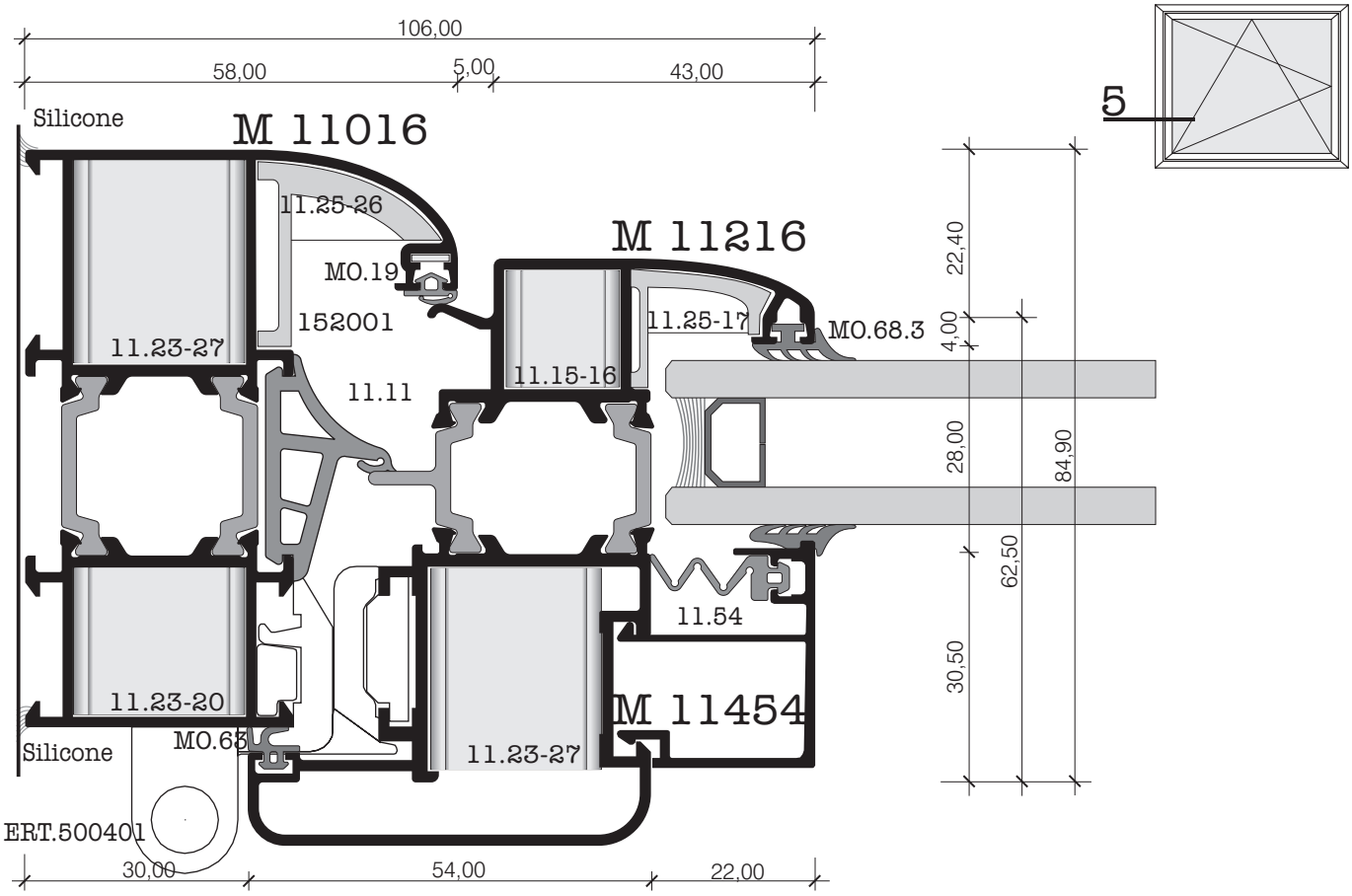
106,00
58,00
5,00
43,00
Silicone
M 11016
11.25-26
M 11216
MO.19
152001
11.25-17
MO.68.3
11.23-27
11.15-16
11.11
22,40
4,00
28,00
84,90
62,50
11.54
30,50
11.23-20
M 11454
MO.63
Silicone
11.23-27
ERT.500401
30,00
54,00
22,00
5

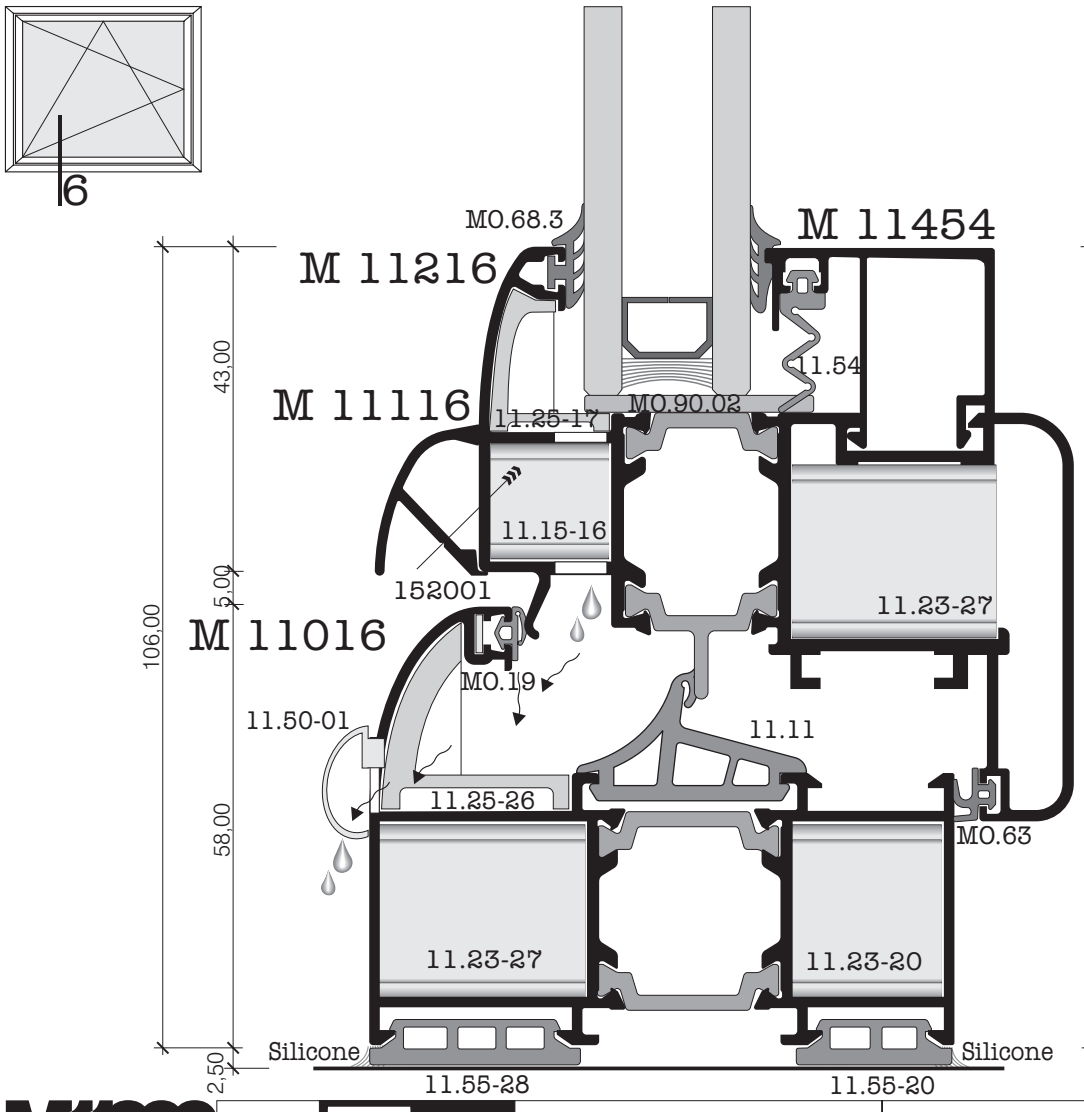
6
MO.68.3
M 11454
M 11216
11.54
22,00
43,00
M 11116
11.25-17
MO.90.02
11.15-16
152001
5,00
106,00
11.23-27
54,00
M 11016
MO.19
11.50-01
11.11
11.25-26
MO.63
58,00
11.23-27
11.23-20
30,00
Silicone
Silicone
2,50
11.55-28
11.55-20

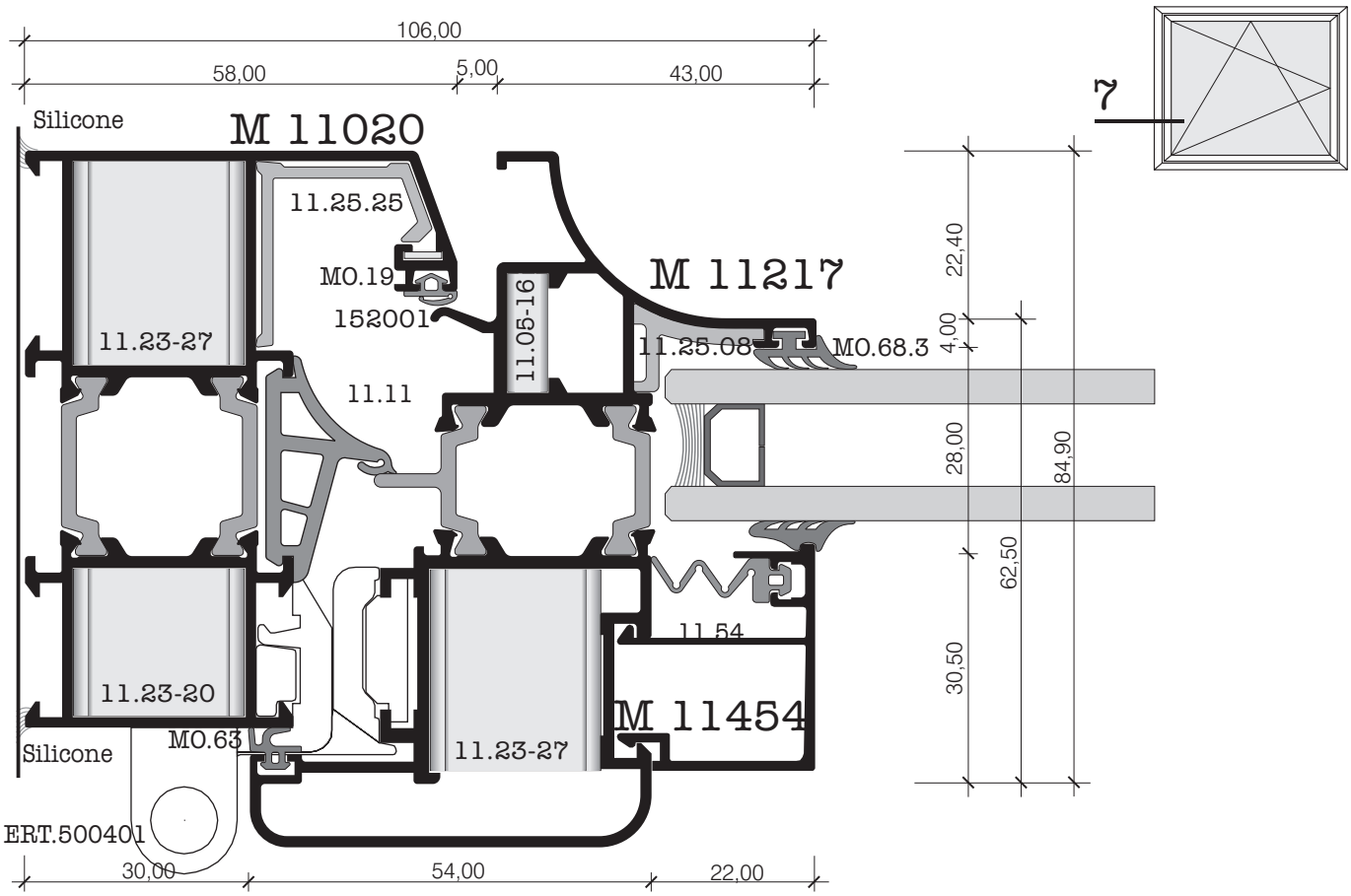

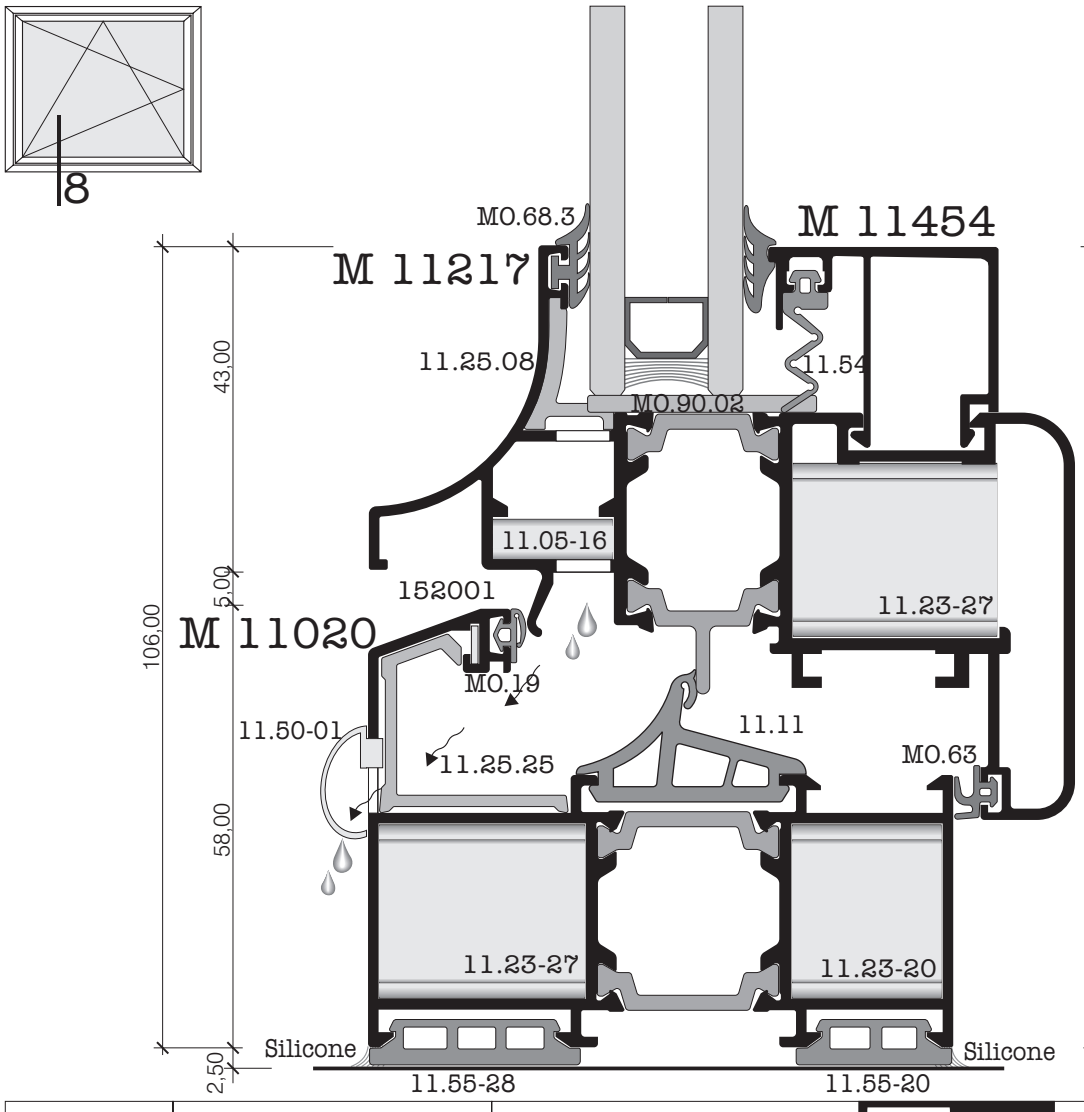

R = 1: 1	Sections 7 , 8	M11000 Alutherm PLUS	51

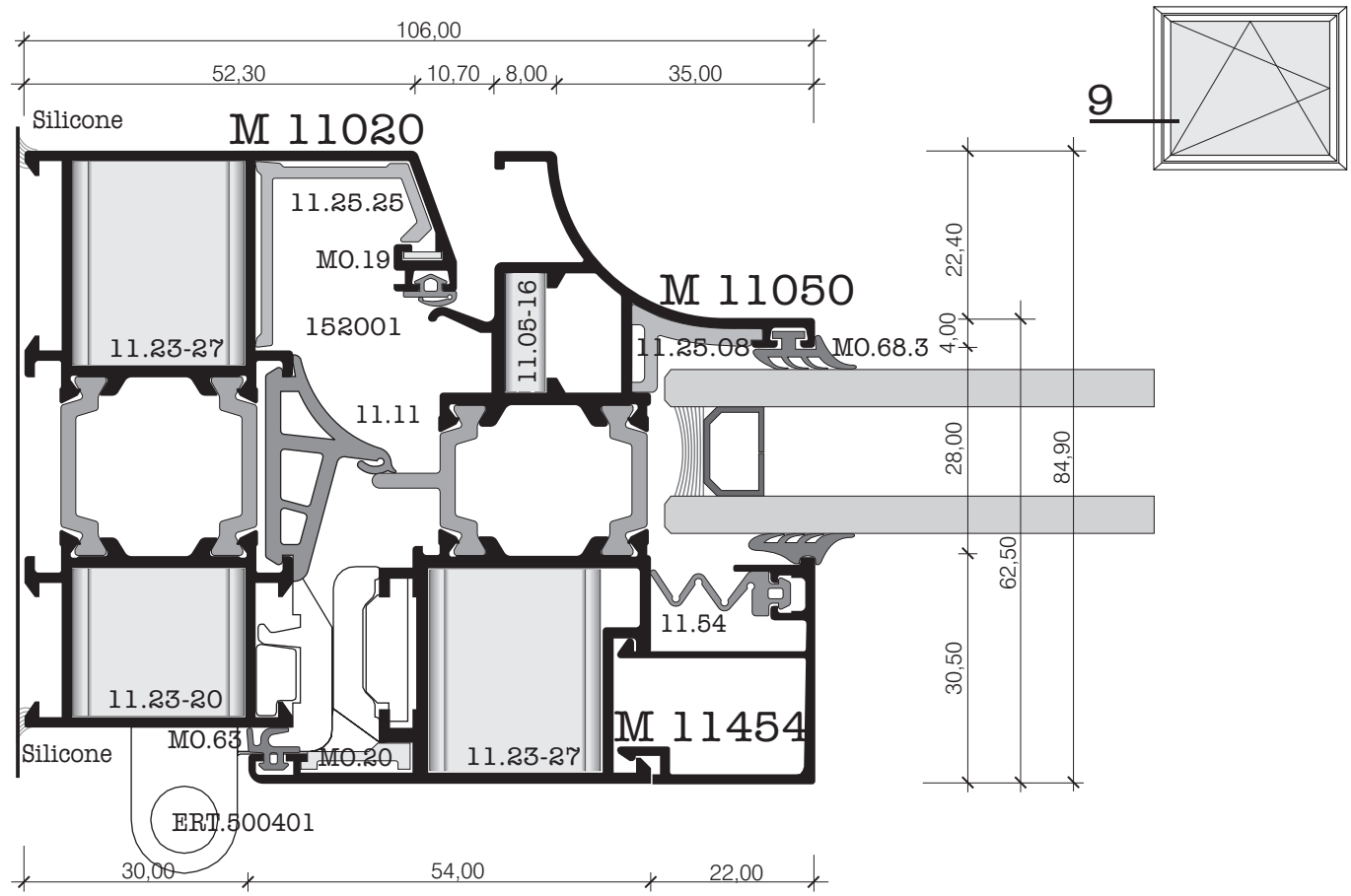
106,00
52,30
10,70
8,00
35,00
Silicone
M 11020
11.25.25
M0.19
152001
11.23-27
11.05-16
M 11050
11.25.08
M0.68.3
11.11
11.54
11.23-20
M0.63
M0.20
11.23-27
M 11454
Silicone
ERT.500401
30,00
54,00
22,00
22,40
4,00
28,00
84,90
62,50
30,50
9

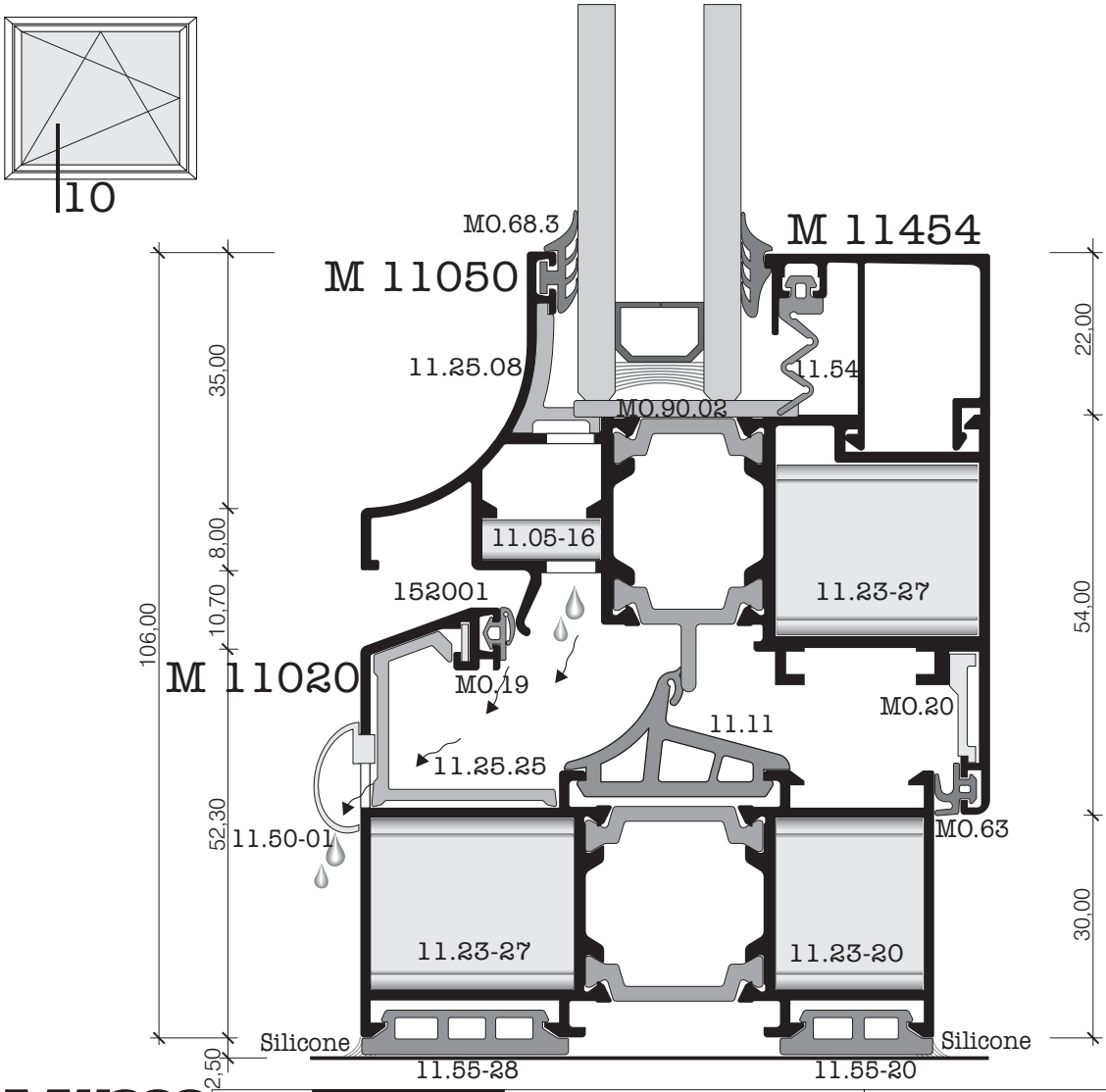
10
M0.68.3
M 11454
M 11050
11.25.08
11.54
M0.90.02
11.05-16
152001
11.23-27
M 11020
M0.19
M0.20
11.11
11.25.25
11.50-01
M0.63
11.23-27
11.23-20
Silicone
Silicone
11.55-28
11.55-20
106,00
35,00
8,00
10,70
52,30
2,50
22,00
54,00
30,00

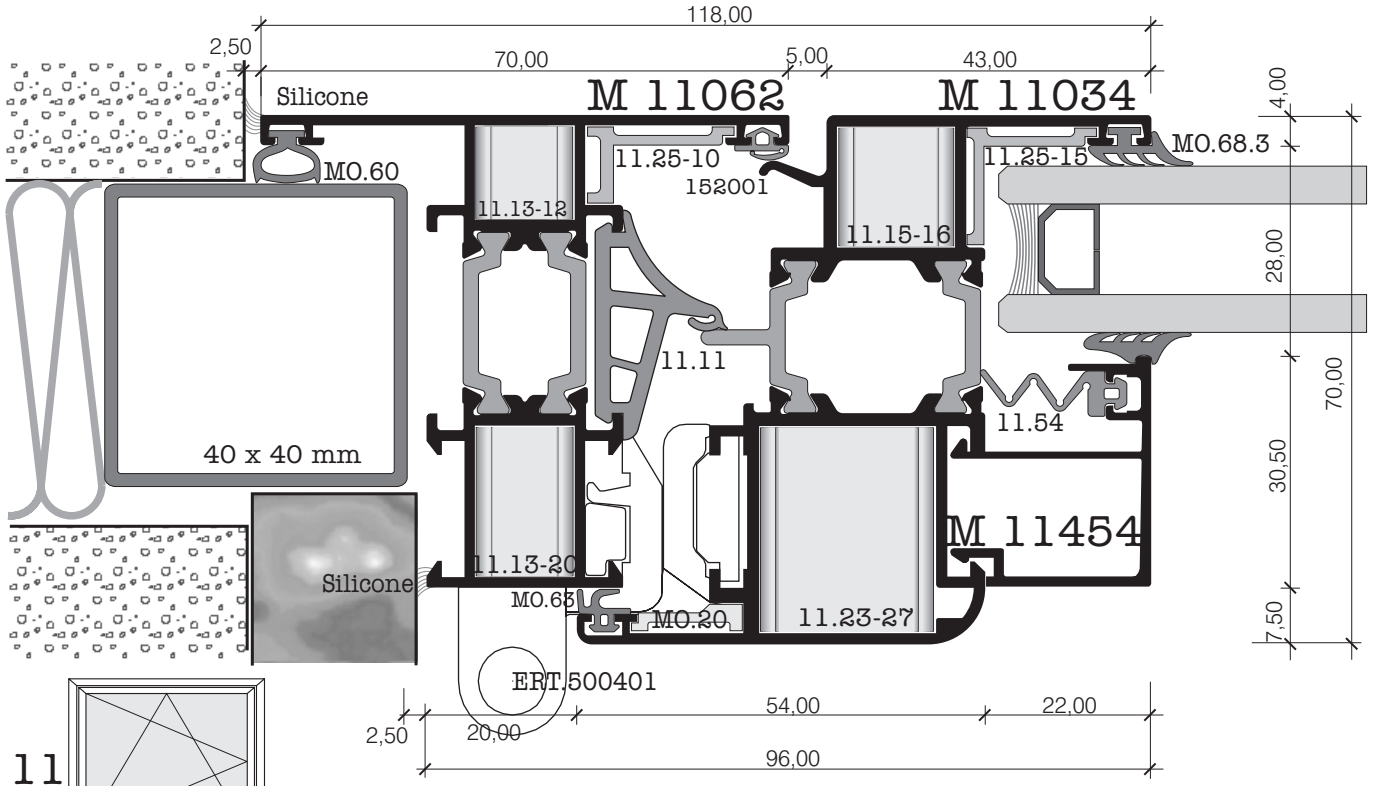
118,00
2,50
70,00
5,00
43,00
Silicone
M 11062
M 11034
4,00
MO.60
11.25-10
152001
MO.68.3
11.25-15
11.13-12
11.15-16
28,00
11.11
70,00
11.54
40 x 40 mm
30,50
M 11454
Silicone
11.13-20
MO.63
MO.20
11.23-27
7,50
ERT.500401
54,00
22,00
2,50
20,00
96,00

11

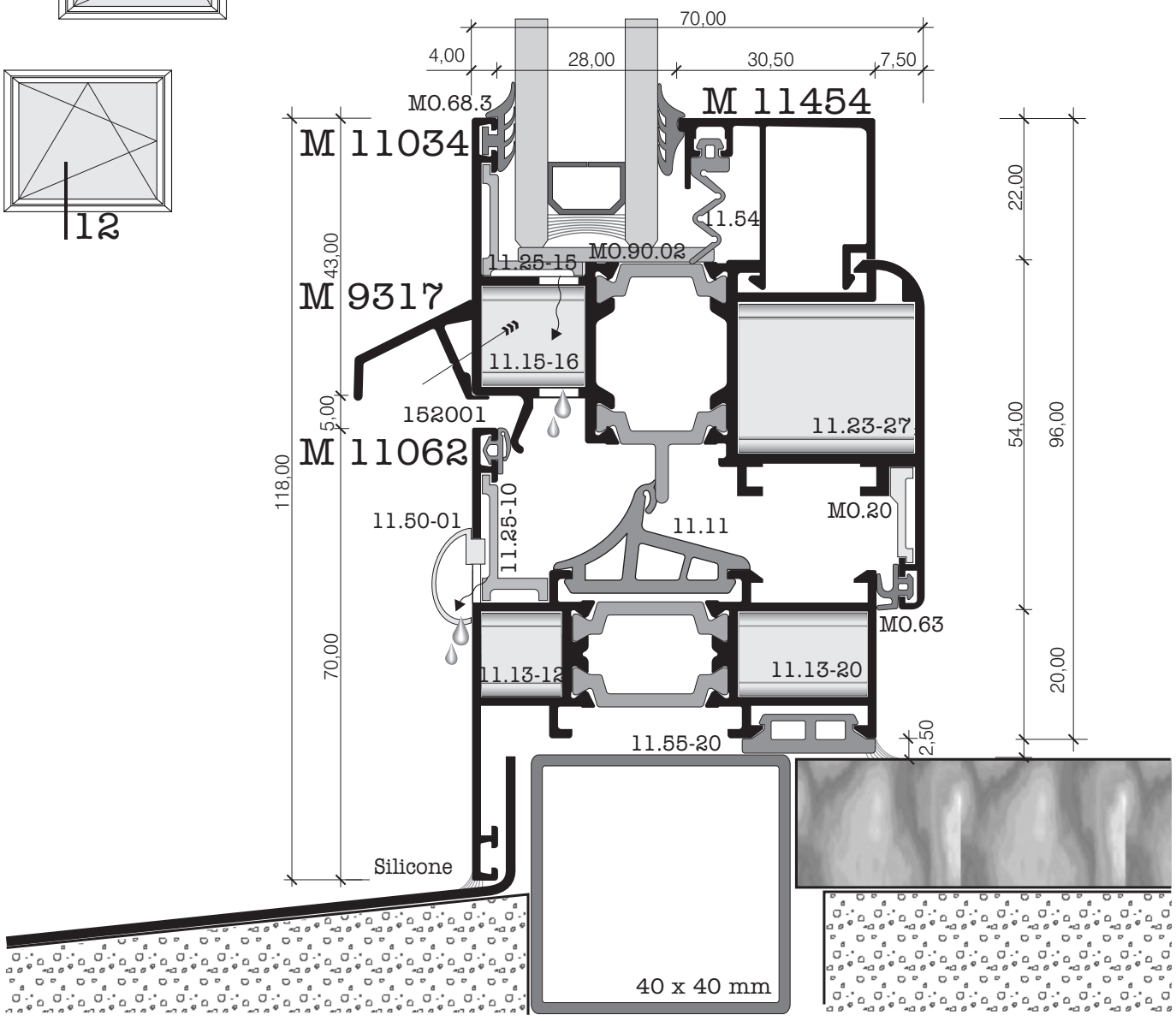
70,00
4,00
28,00
30,50
7,50
MO.68.3
M 11454
M 11034
22,00
11.54
MO.90.02
11.25-15
43,00
M 9317
11.15-16
5,00
152001
11.23-27
M 11062
54,00
96,00
118,00
11.50-01
11.25-10
11.11
MO.20
MO.63
70,00
11.13-12
11.13-20
20,00
11.55-20
2,50
Silicone
40 x 40 mm

12

13.

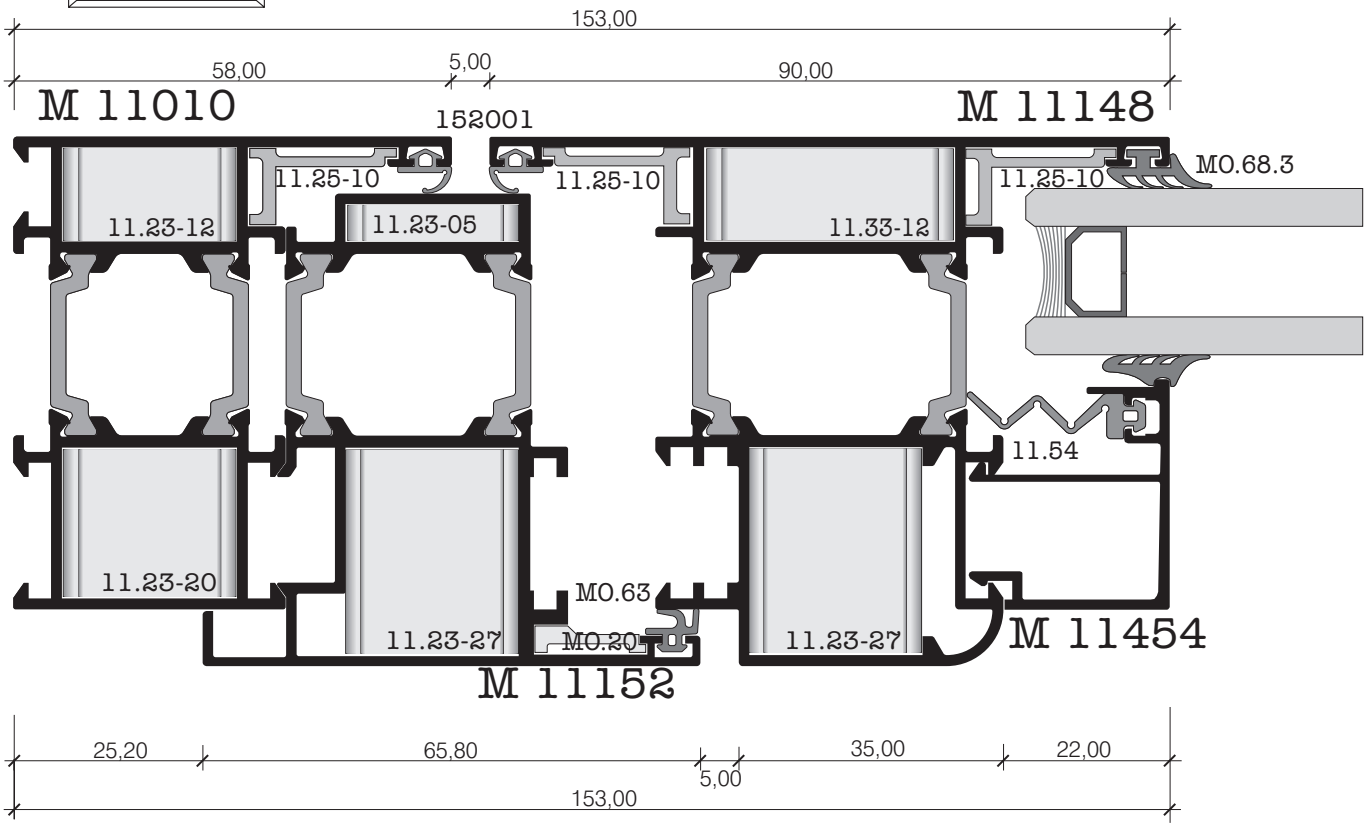
153,00
58,00
5,00
90,00
M 11010
152001
M 11148
11.25-10
11.25-10
11.25-10
MO.68.3
11.23-12
11.23-05
11.33-12
11.54
11.23-20
MO.63
MO.20
11.23-27
11.23-27
M 11454
M 11152
25,20
65,80
5,00
35,00
22,00
153,00

14

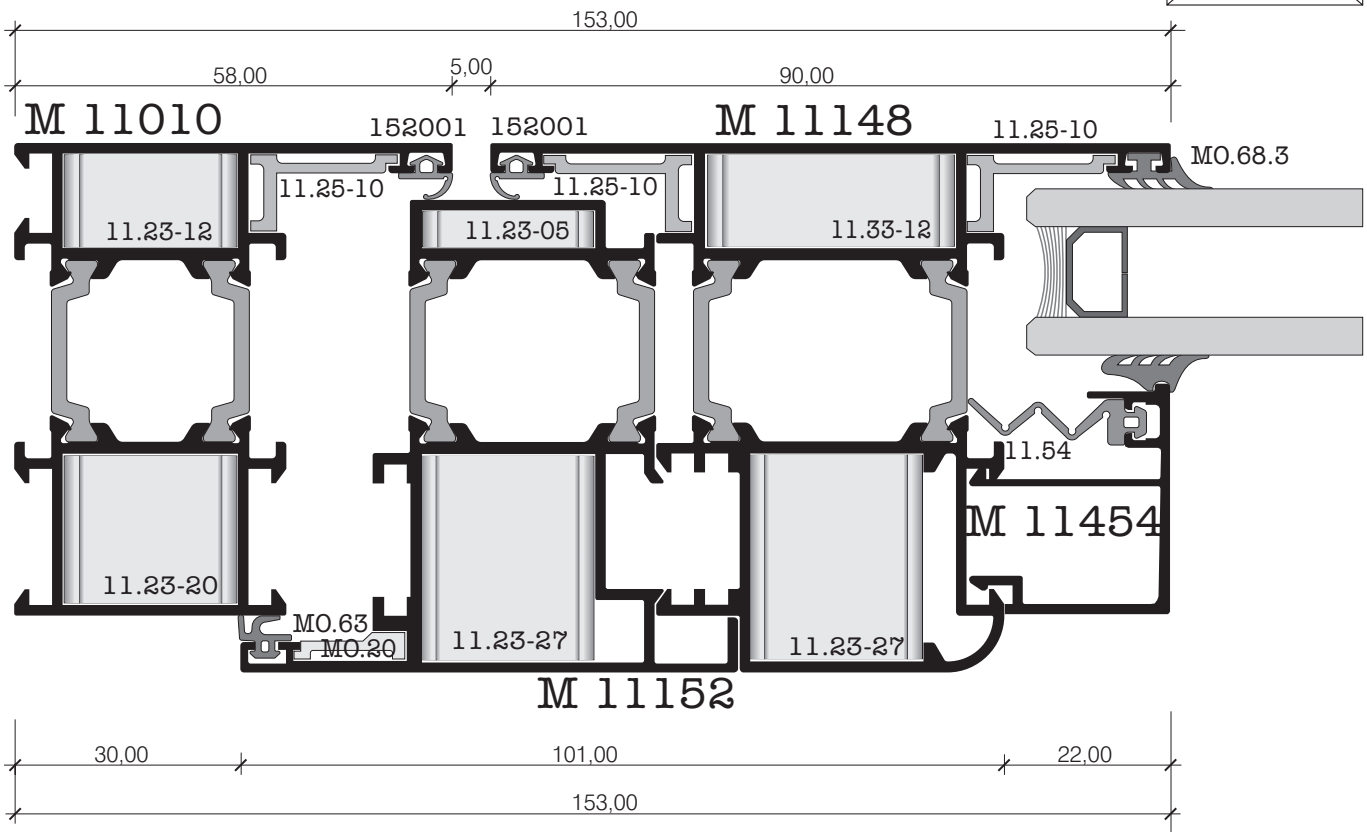
153,00
58,00
5,00
90,00
M 11010
152001
152001
M 11148
11.25-10
11.25-10
11.25-10
MO.68.3
11.23-12
11.23-05
11.33-12
11.54
M 11454
11.23-20
MO.63
MO.20
11.23-27
11.23-27
M 11152
30,00
101,00
22,00
153,00

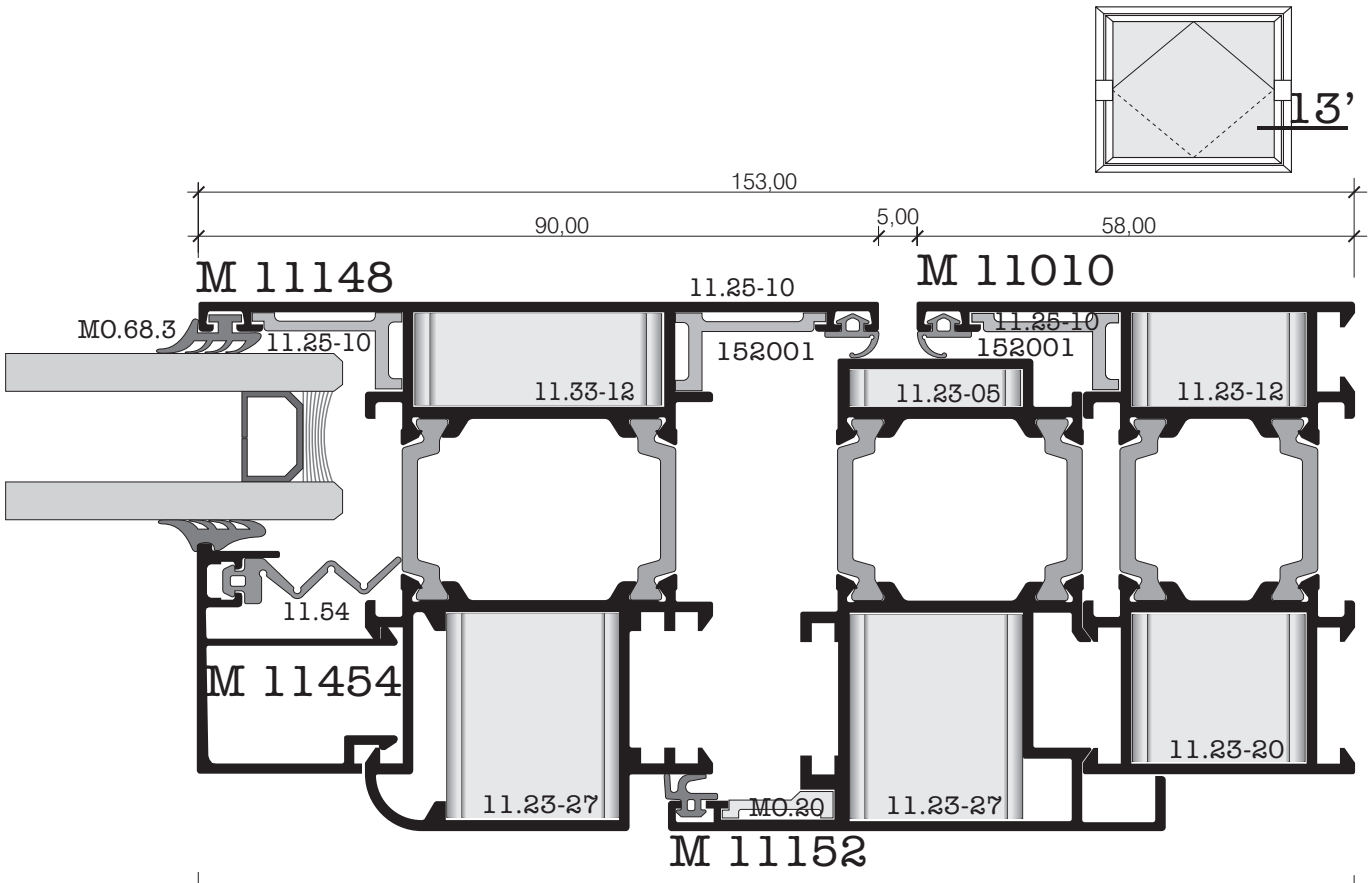
13’
153,00
90,00
5,00
58,00
M 11148
M 11010
11.25-10
M0.68.3
11.25-10
152001
11.25-10
152001
11.33-12
11.23-05
11.23-12
11.54
M 11454
11.23-20
11.23-27
M0.20
11.23-27
M 11152
22,00
35,00
5,00
65,80
25,20
153,00

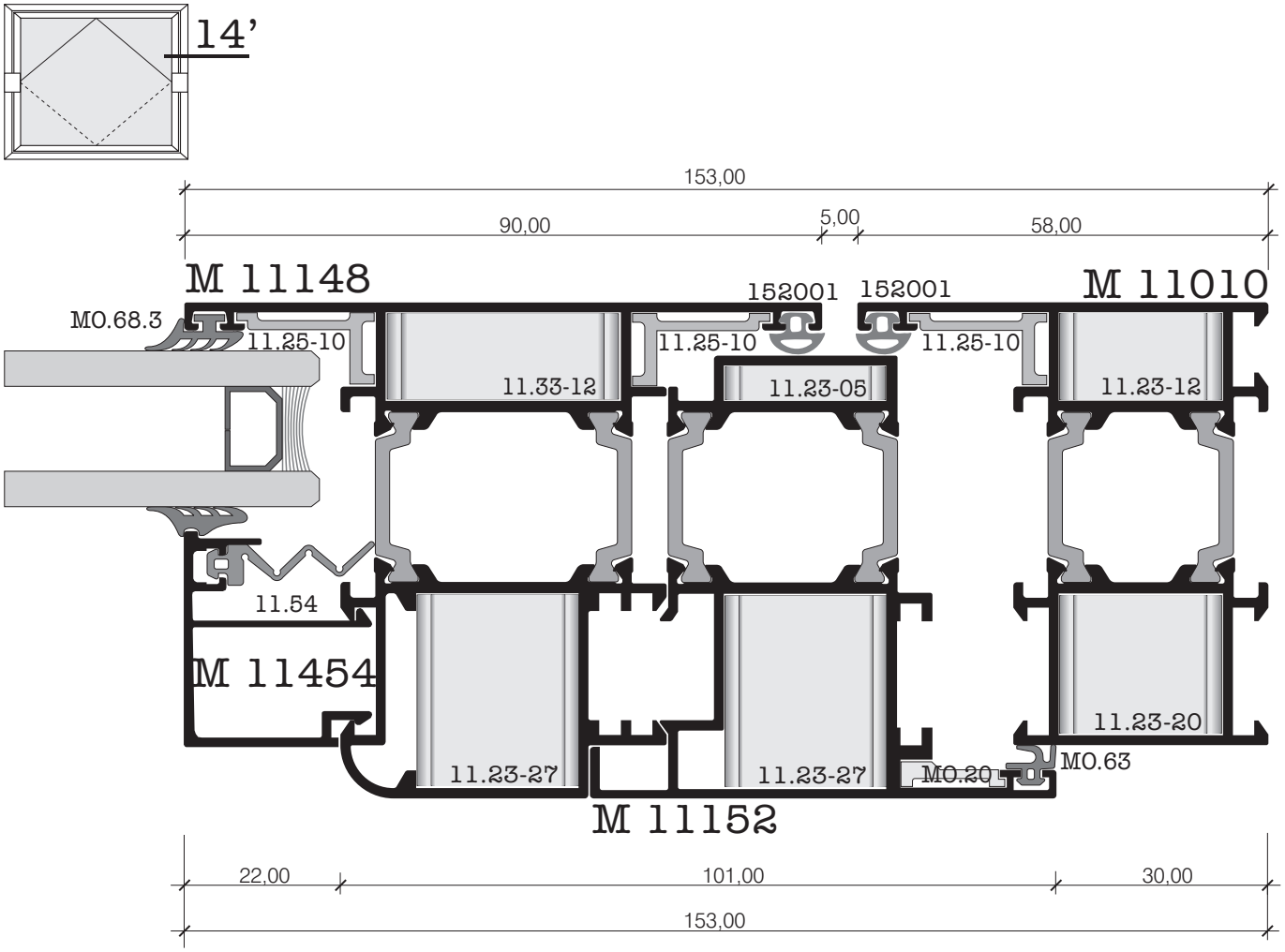
14’
153,00
90,00
5,00
58,00
M 11148
152001
152001
M 11010
M0.68.3
11.25-10
11.25-10
11.25-10
11.33-12
11.23-05
11.23-12
11.54
M 11454
11.23-20
11.23-27
11.23-27
M0.20
M0.63
M 11152
22,00
101,00
30,00
153,00

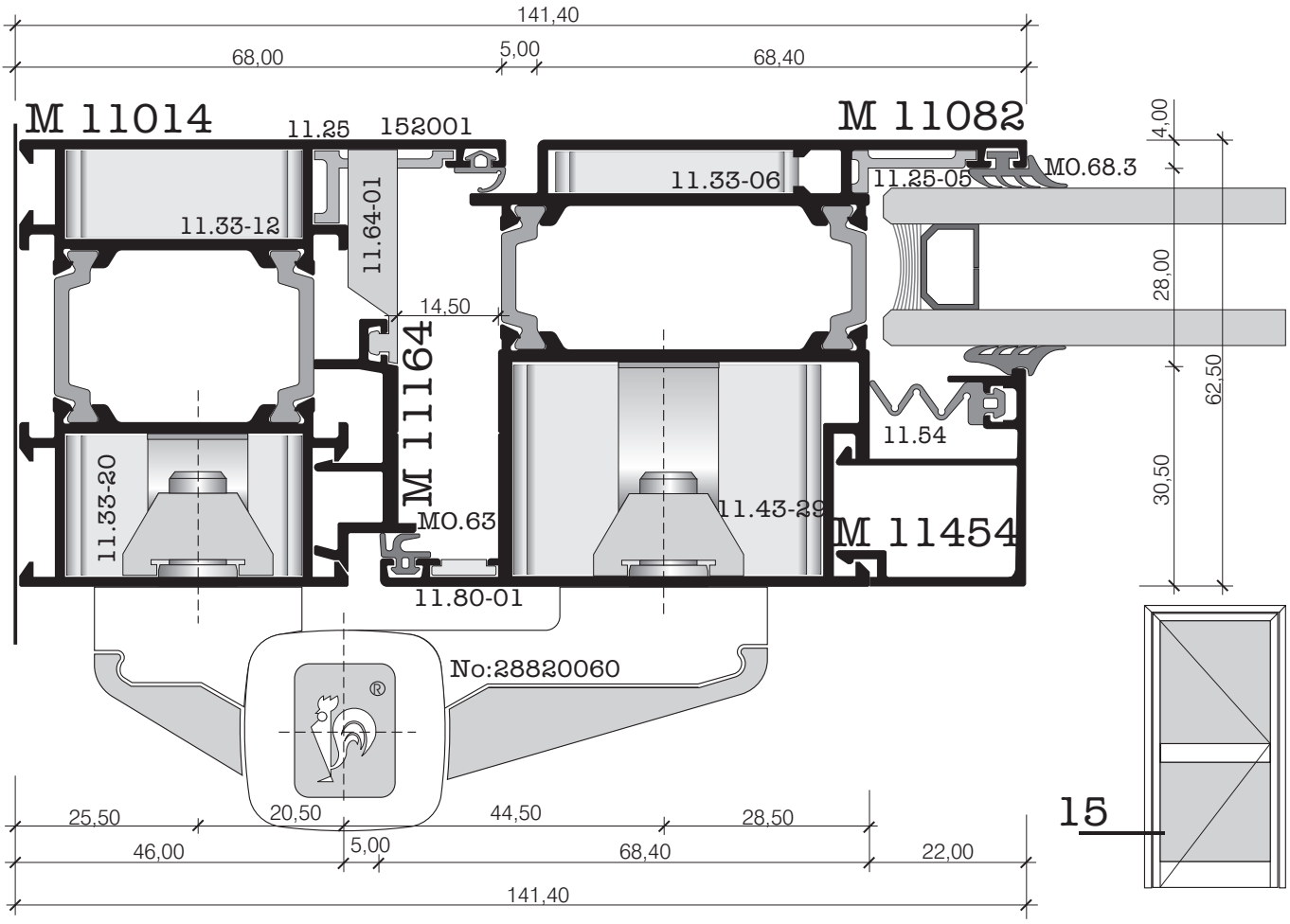
141,40
68,00
5,00
68,40
M 11014
11.25
152001
M 11082
11.33-12
11.64-01
11.33-06
11.25-05
MO.68.3
4,00
28,00
62,50
30,50
14,50
M 11164
11.54
11.33-20
MO.63
11.43-29
M 11454
11.80-01
No:28820060
25,50
20,50
44,50
28,50
46,00
5,00
68,40
22,00
141,40
15

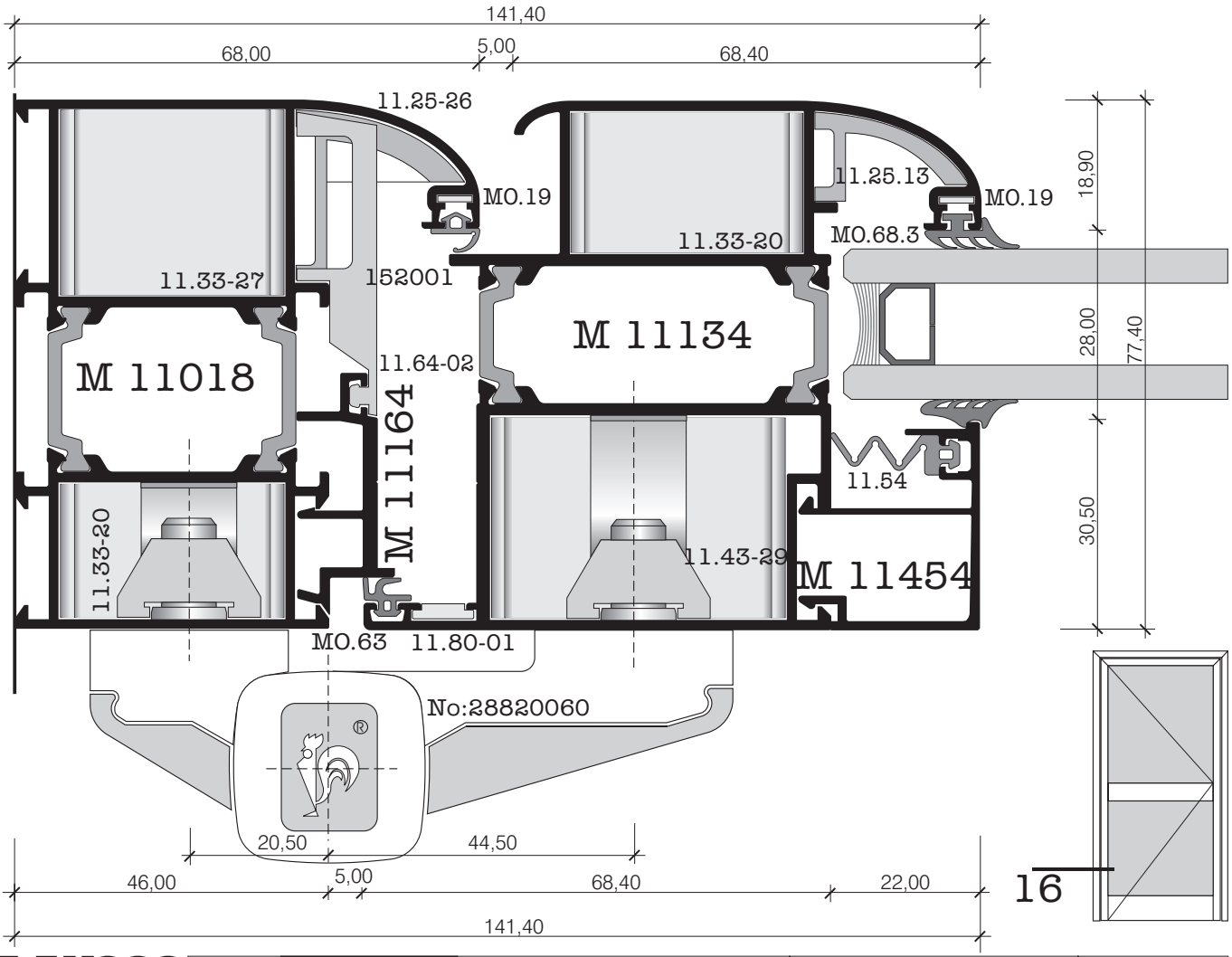
141,40
68,00
5,00
68,40
11.25-26
MO.19
11.25.13
MO.19
18,90
11.33-20
MO.68.3
11.33-27
152001
M 11134
28,00
77,40
M 11018
11.64-02
M 11164
11.54
30,50
11.33-20
11.43-29
M 11454
MO.63
11.80-01
No:28820060
20,50
44,50
46,00
5,00
68,40
22,00
141,40
16

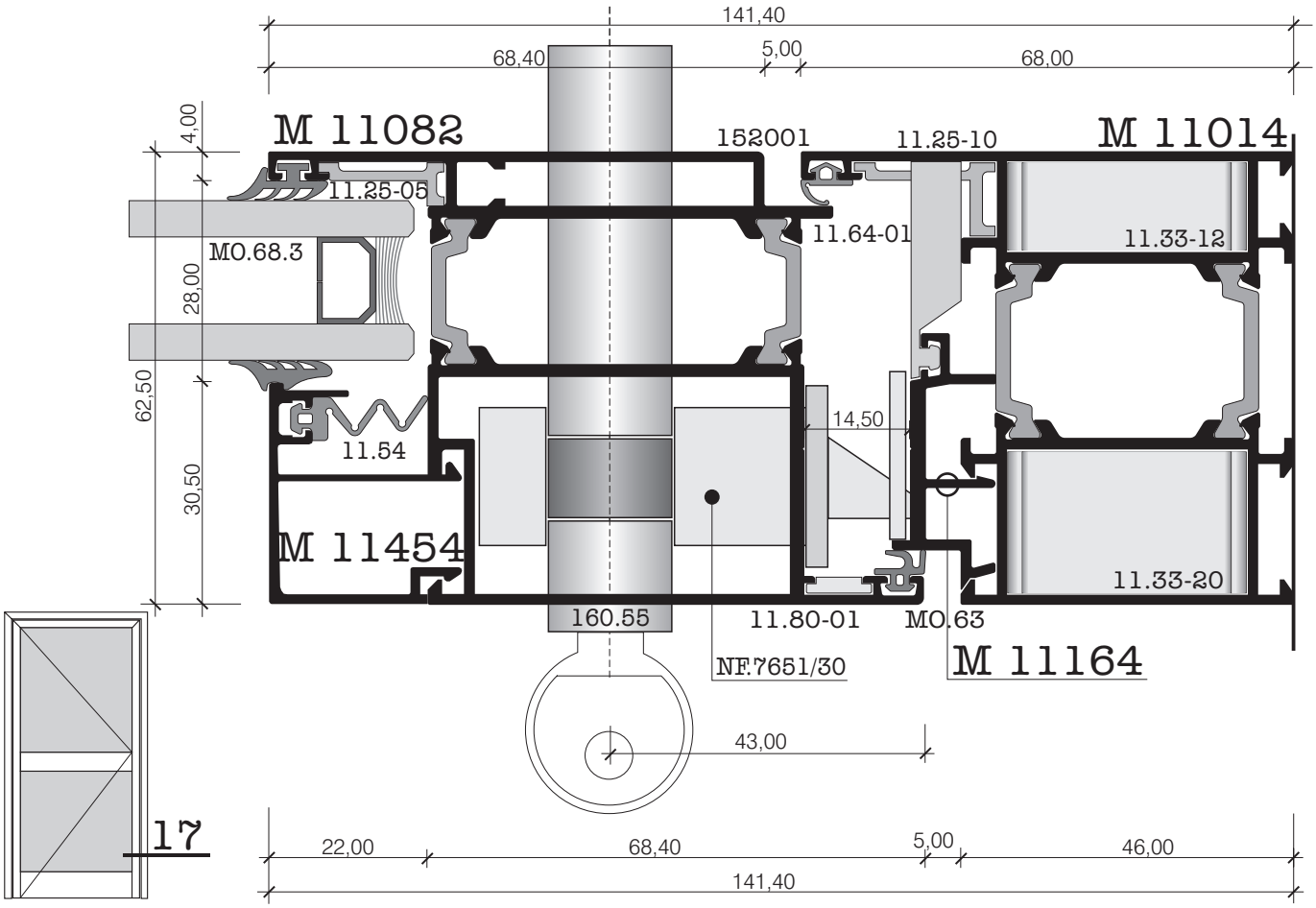

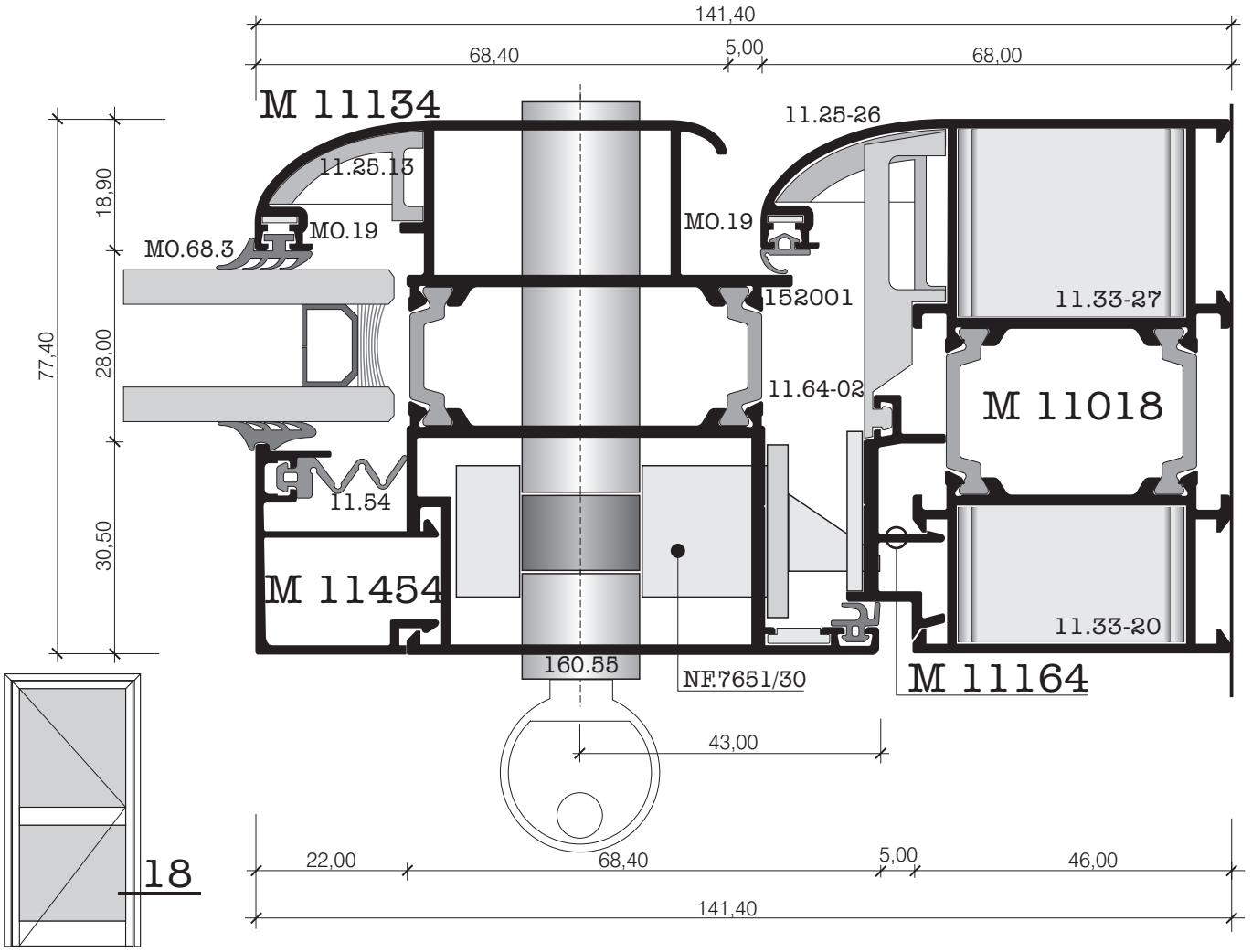

R = 1: 1	Sections 17 , 18	M11000 Alutherm PLUS	57

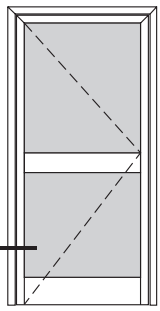

19

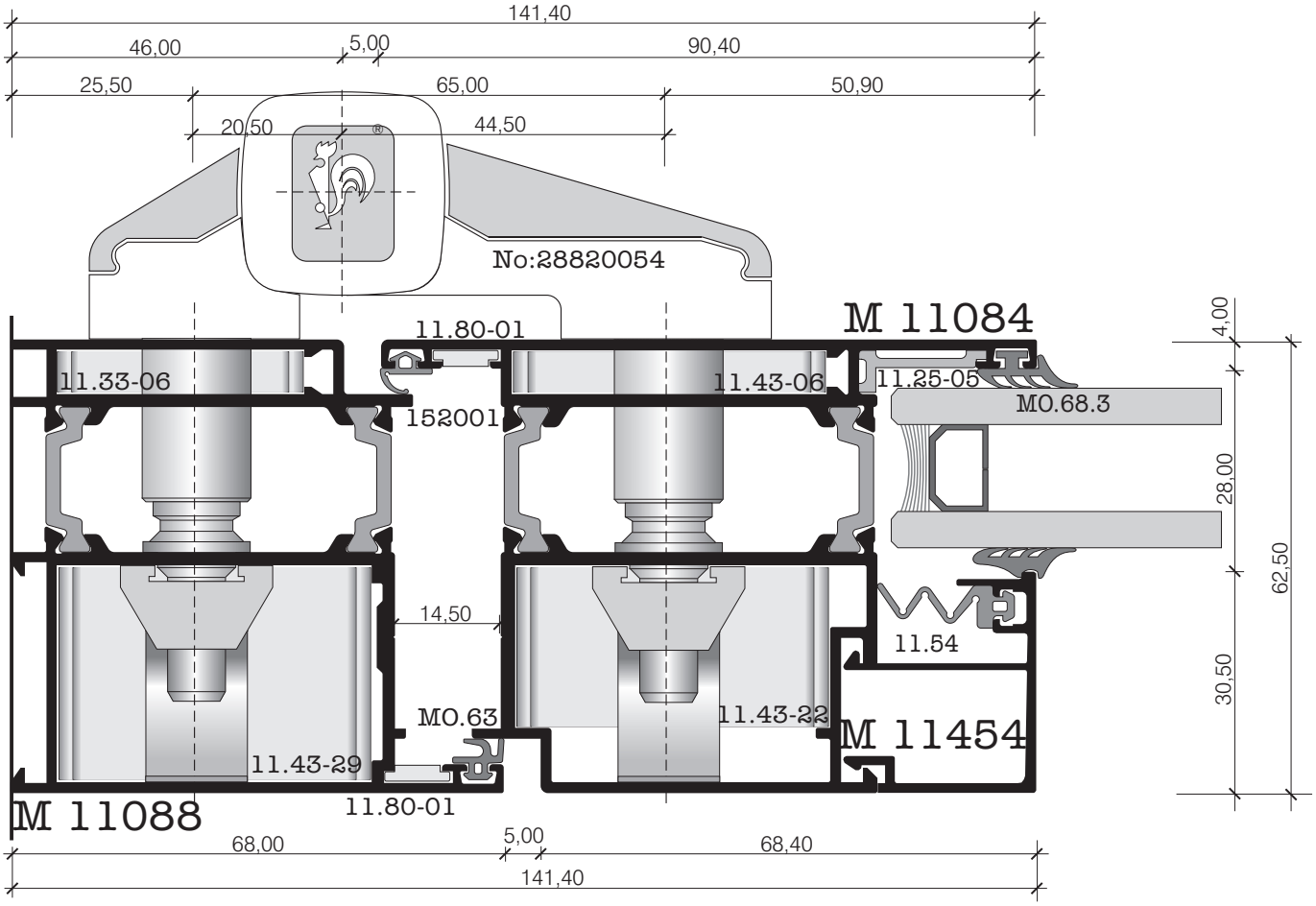
141,40
46,00
5,00
90,40
25,50
65,00
50,90
20,50
44,50
No:28820054
M 11084
11.80-01
11.33-06
11.43-06
11.25-05
M0.68.3
152001
4,00
28,00
62,50
14,50
11.54
30,50
M0.63
11.43-22
M 11454
11.43-29
11.80-01
M 11088
68,00
5,00
68,40
141,40

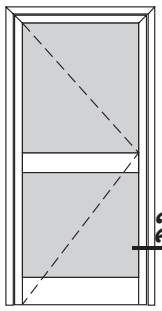
20

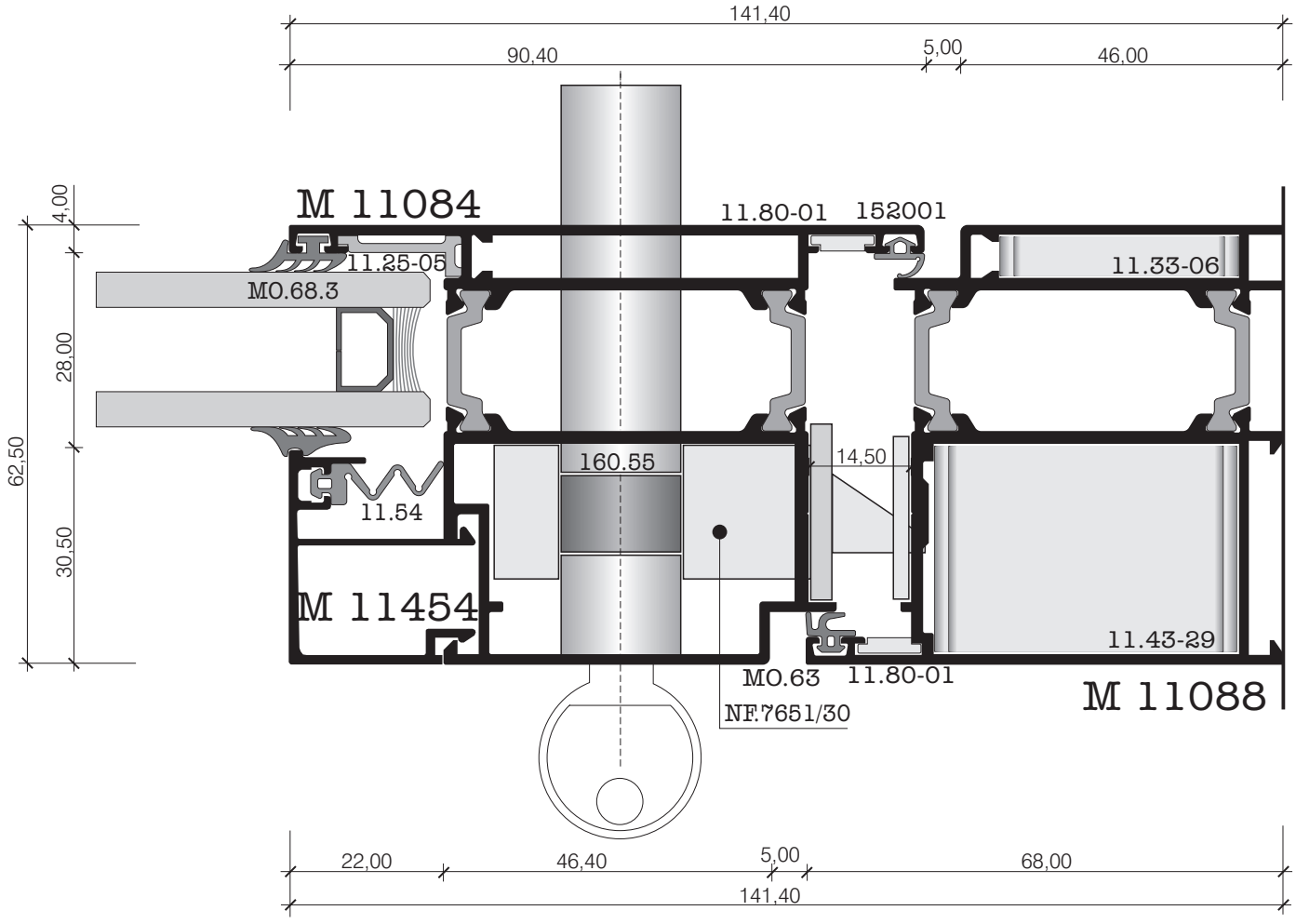
141,40
90,40
5,00
46,00
4,00
28,00
30,50
62,50
M 11084
11.80-01
152001
11.25-05
MO.68.3
11.33-06
160.55
14,50
11.54
M 11454
11.43-29
MO.63
11.80-01
M 11088
NF.7651/30
22,00
46,40
5,00
68,00
141,40

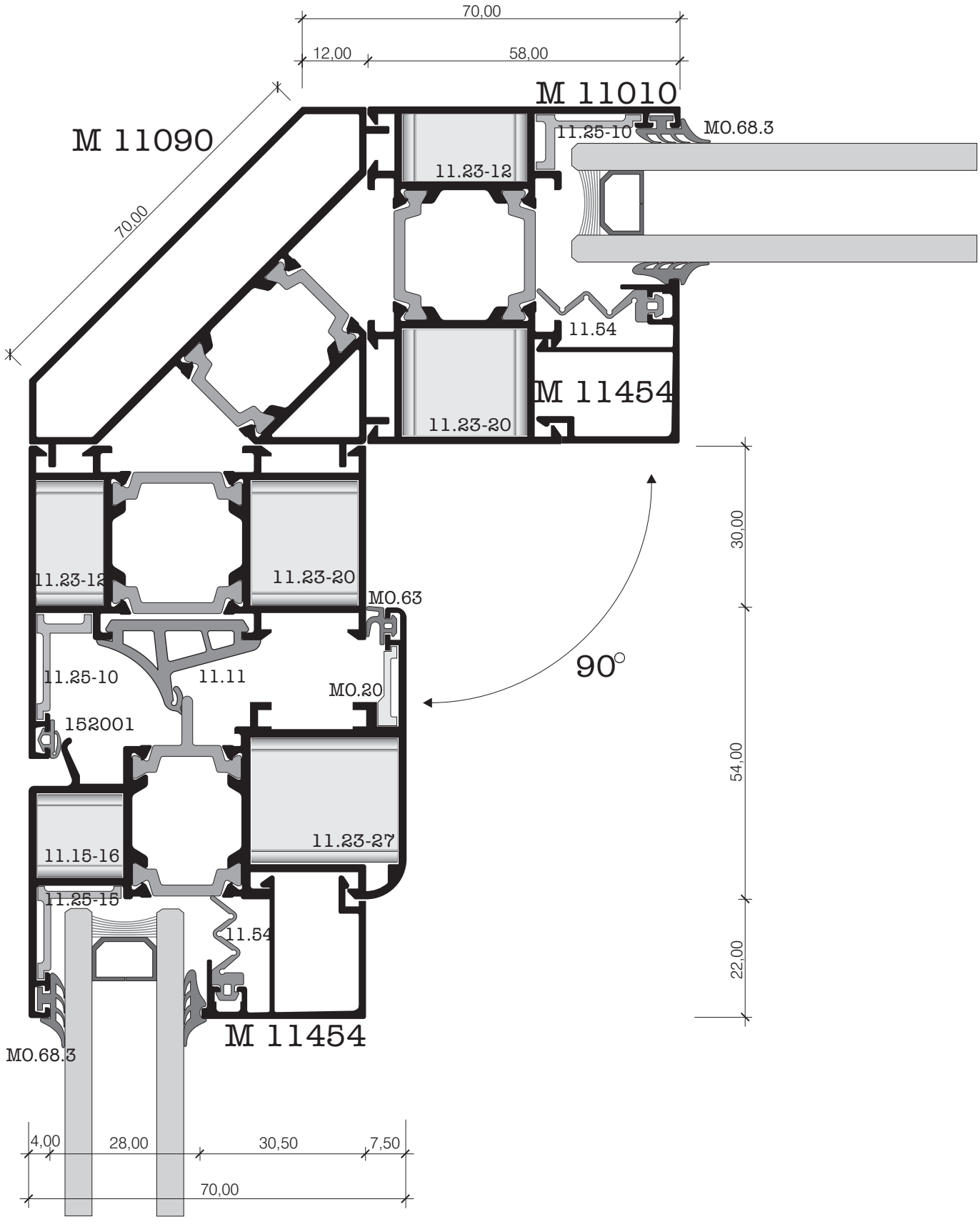
70,00
12,00
58,00
M 11010
M 11090
70,00
11.25-10
M0.68.3
11.23-12
11.54
M 11454
11.23-20
11.23-12
11.23-20
M0.63
90°
30,00
11.25-10
11.11
M0.20
152001
54,00
11.23-27
11.15-16
11.25-15
11.54
22,00
M 11454
M0.68.3
4,00
28,00
30,50
7,50
70,00

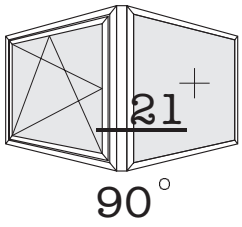
21
90°

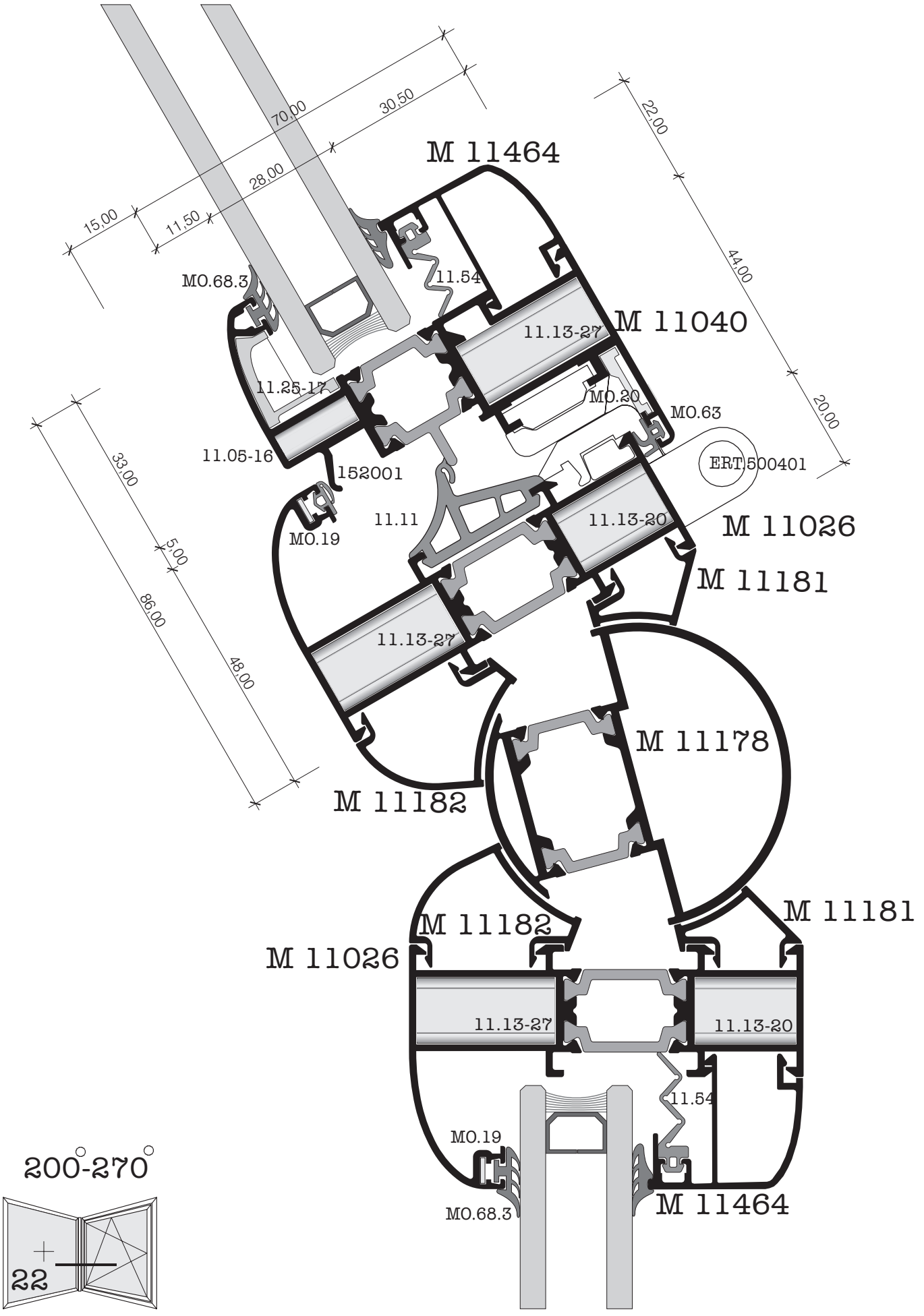
M 11464
70.00
30.50
28.00
15.00
11.50
22.00
44.00
20.00
MO.68.3
11.54
M 11040
11.13-27
11.25-17
MO.20
MO.63
ERT 500401
11.05-16
152001
33.00
5.00
86.00
48.00
11.11
11.13-20
MO.19
M 11026
M 11181
11.13-27
M 11178
M 11182
M 11182
M 11181
M 11026
11.13-27
11.13-20
11.54
MO.19
MO.68.3
M 11464
200-270°
22

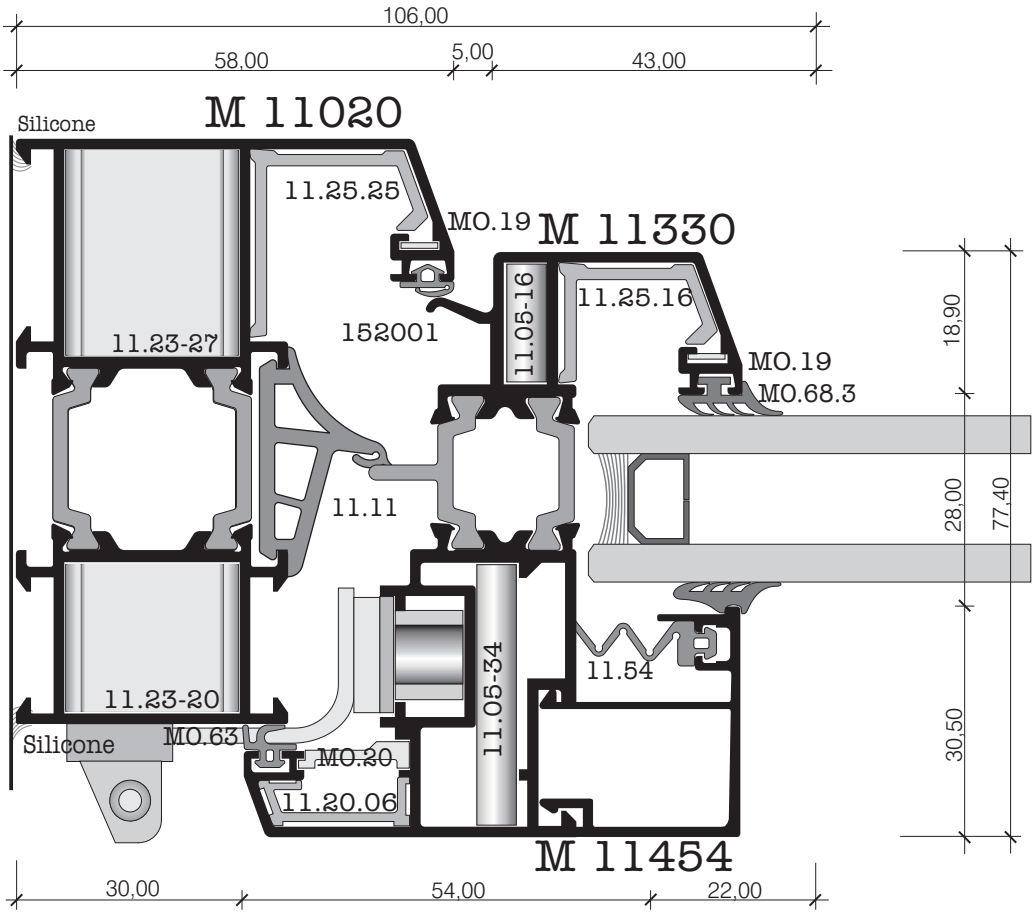
106,00
58,00
5,00
43,00
M 11020
Silicone
11.25.25
MO.19
M 11330
11.05-16
11.25.16
152001
11.23-27
MO.19
MO.68.3
18,90
11.11
28,00
77,40
11.54
11.05-34
11.23-20
Silicone
MO.63
MO.20
11.20.06
30,50
M 11454
30,00
54,00
22,00

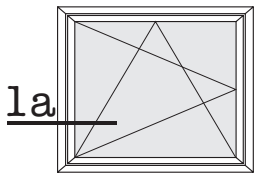
1a

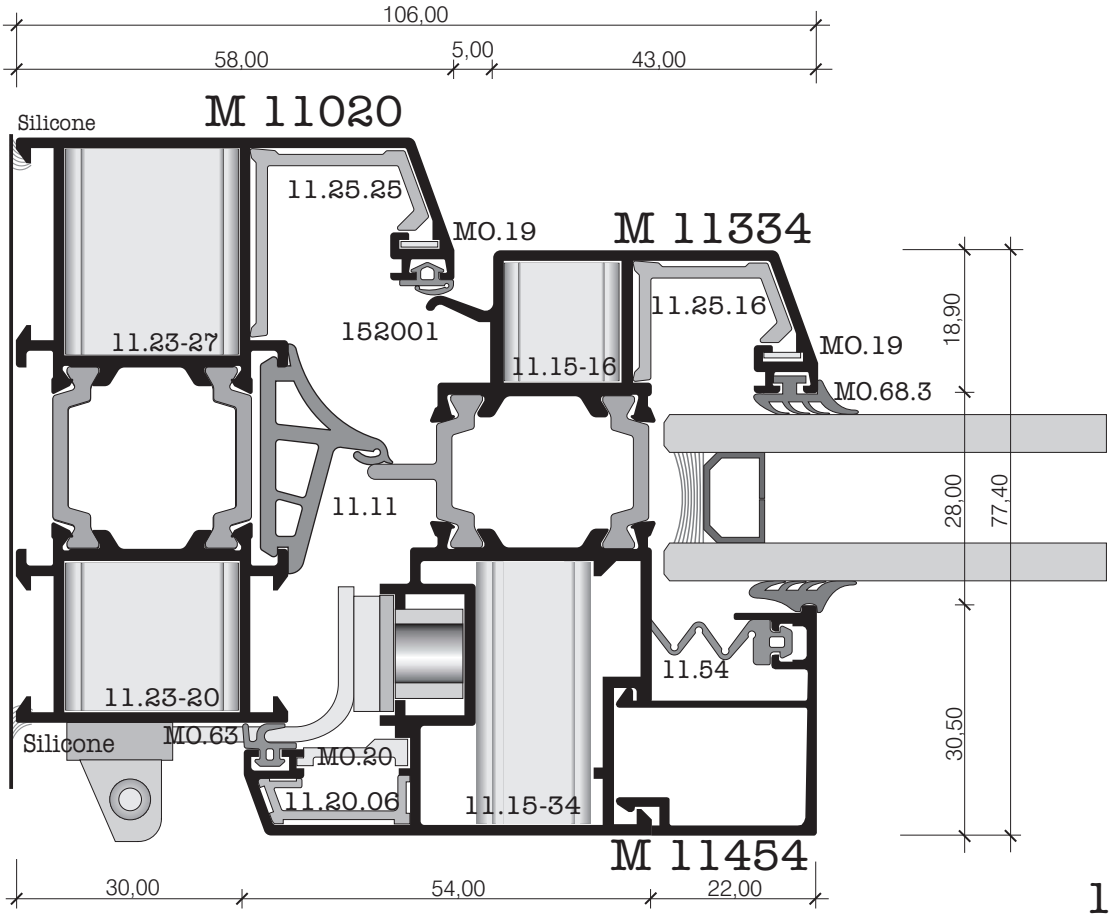
106,00
58,00
5,00
43,00
M 11020
Silicone
11.25.25
MO.19
M 11334
11.25.16
152001
11.23-27
MO.19
11.15-16
MO.68.3
18,90
11.11
28,00
77,40
11.54
11.23-20
Silicone
MO.63
MO.20
11.20.06
11.15-34
30,50
M 11454
30,00
54,00
22,00

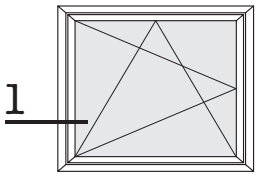
1

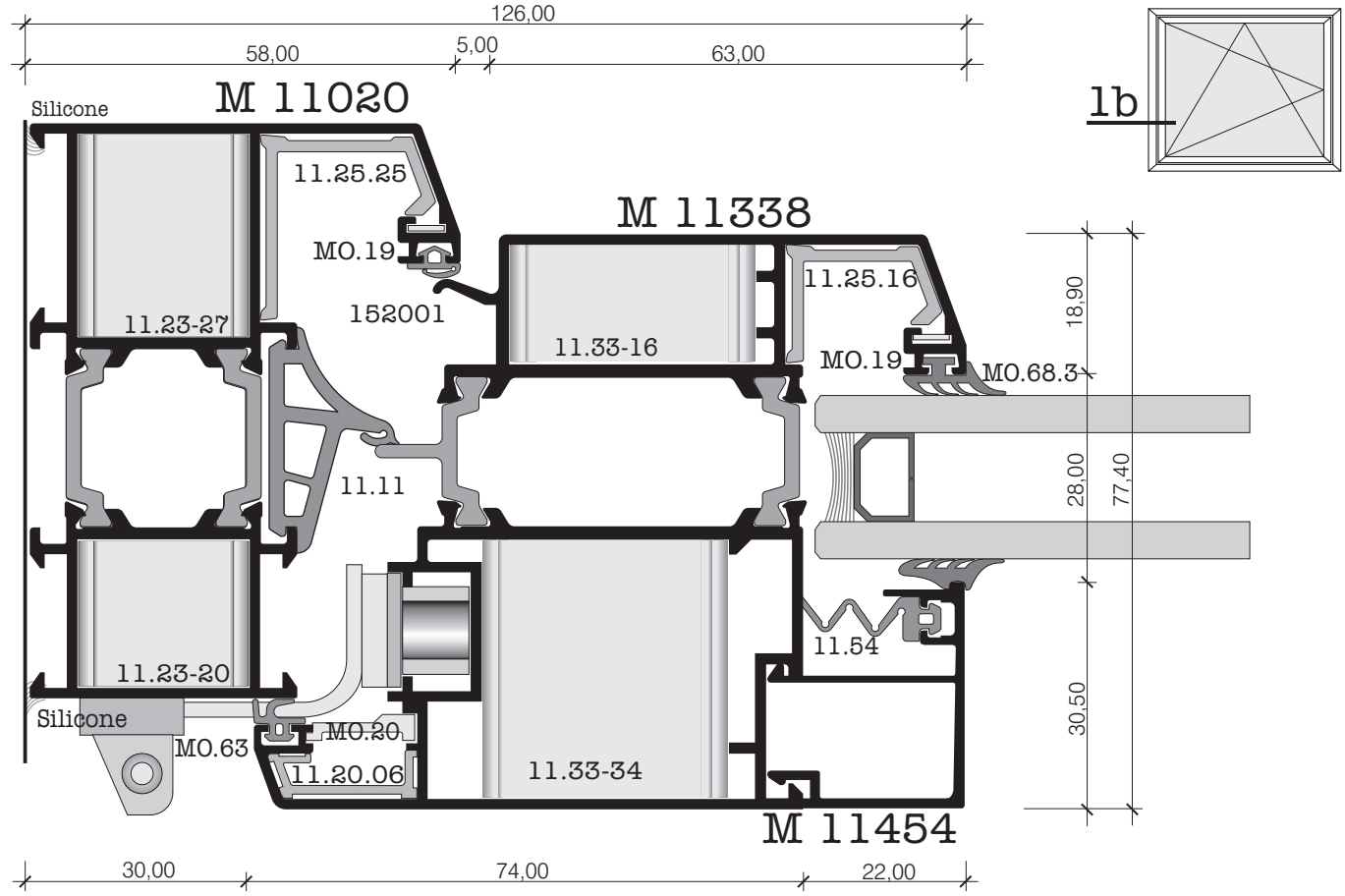

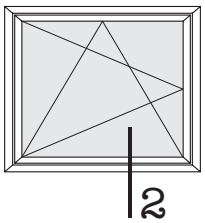

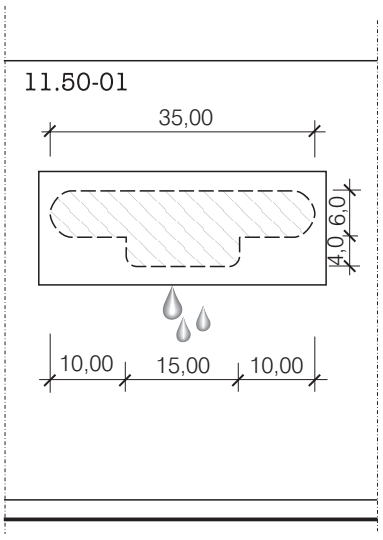

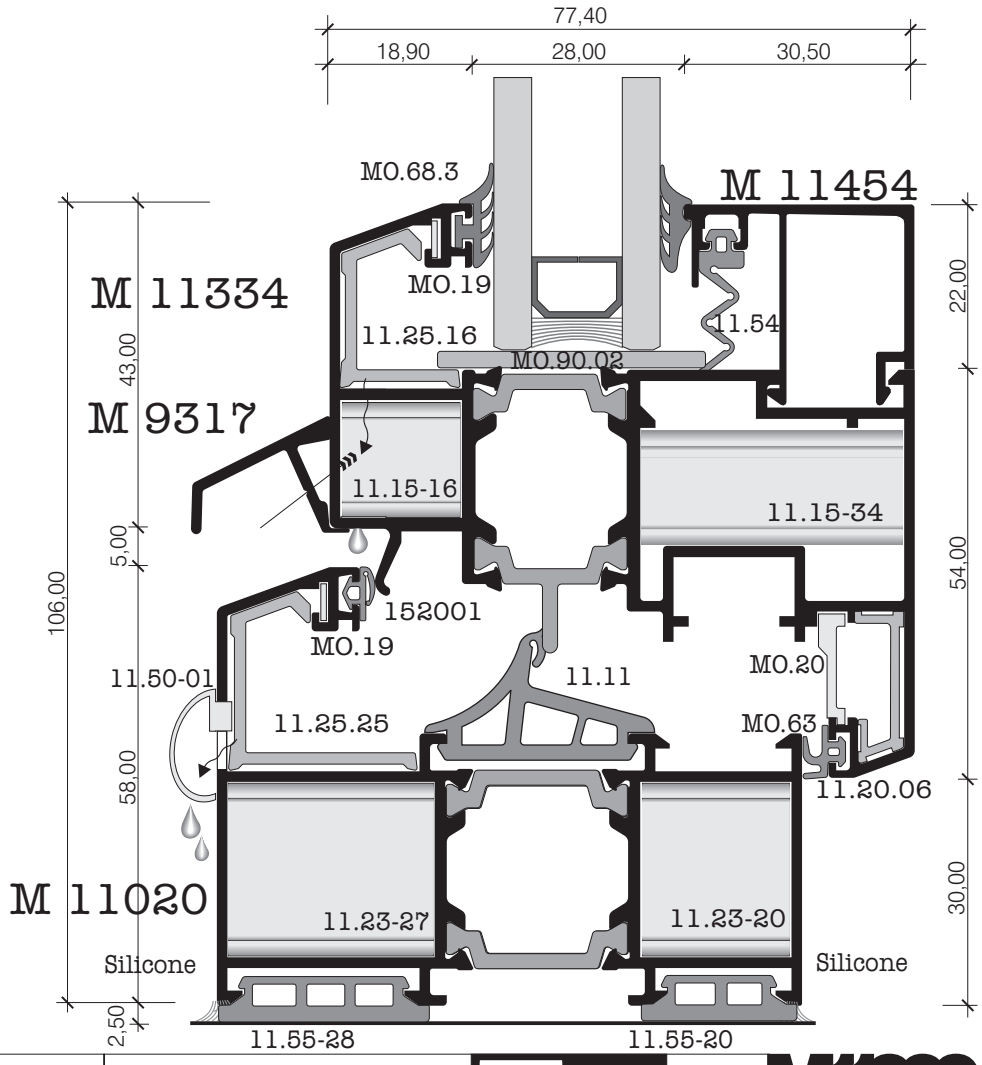

R = 1: 1	Sections 1b , 2	M11000 Alutherm PLUS	63	

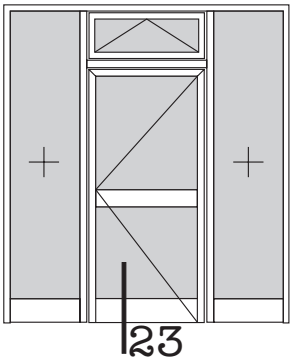
23

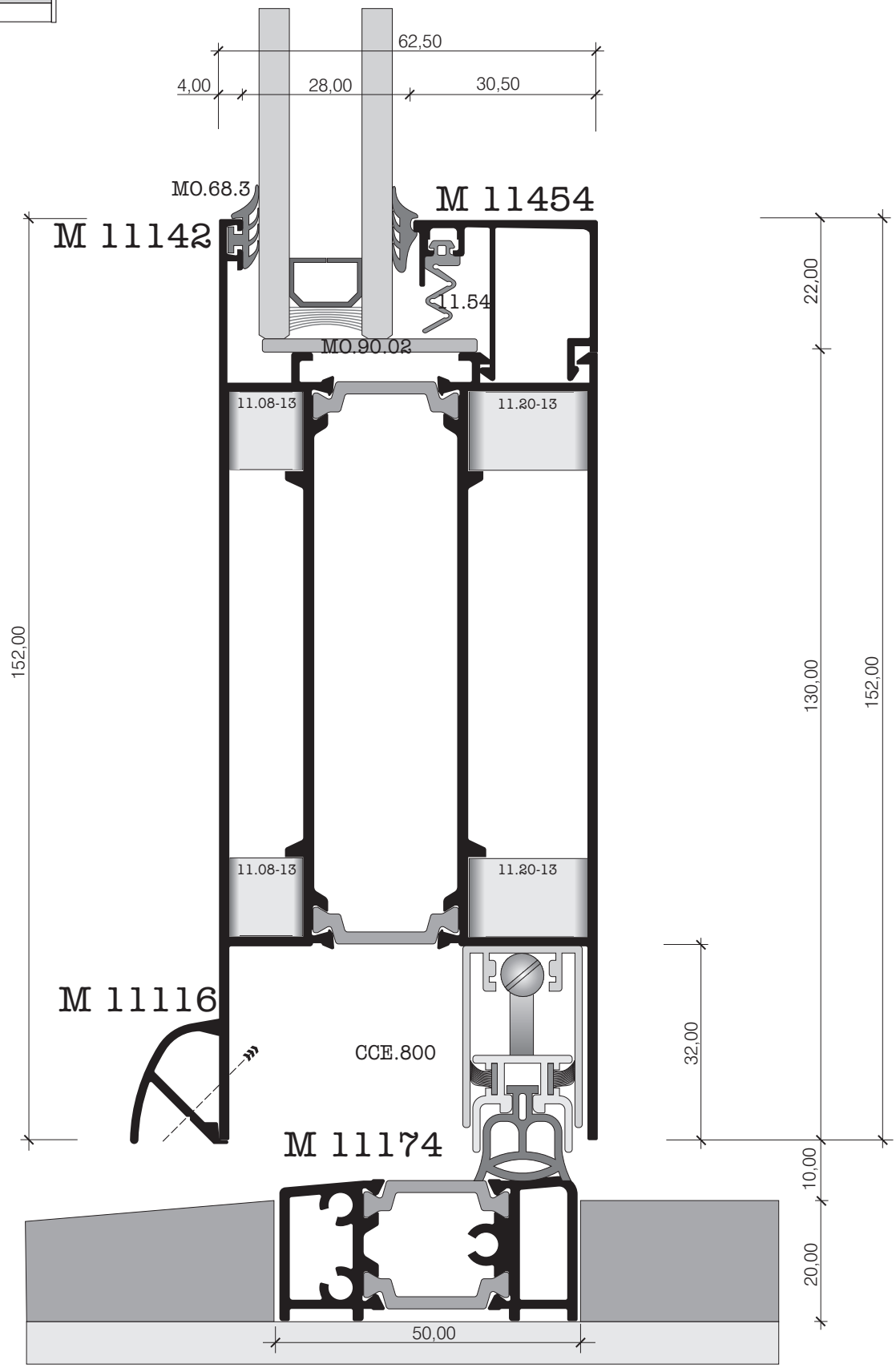
62,50
4,00
28,00
30,50
MO.68.3
M 11454
M 11142
11.54
MO.90.02
11.08-13
11.20-13
152,00
22,00
130,00
152,00
11.08-13
11.20-13
M 11116
CCE.800
32,00
M 11174
10,00
20,00
50,00

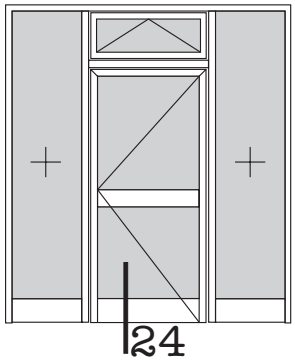
24

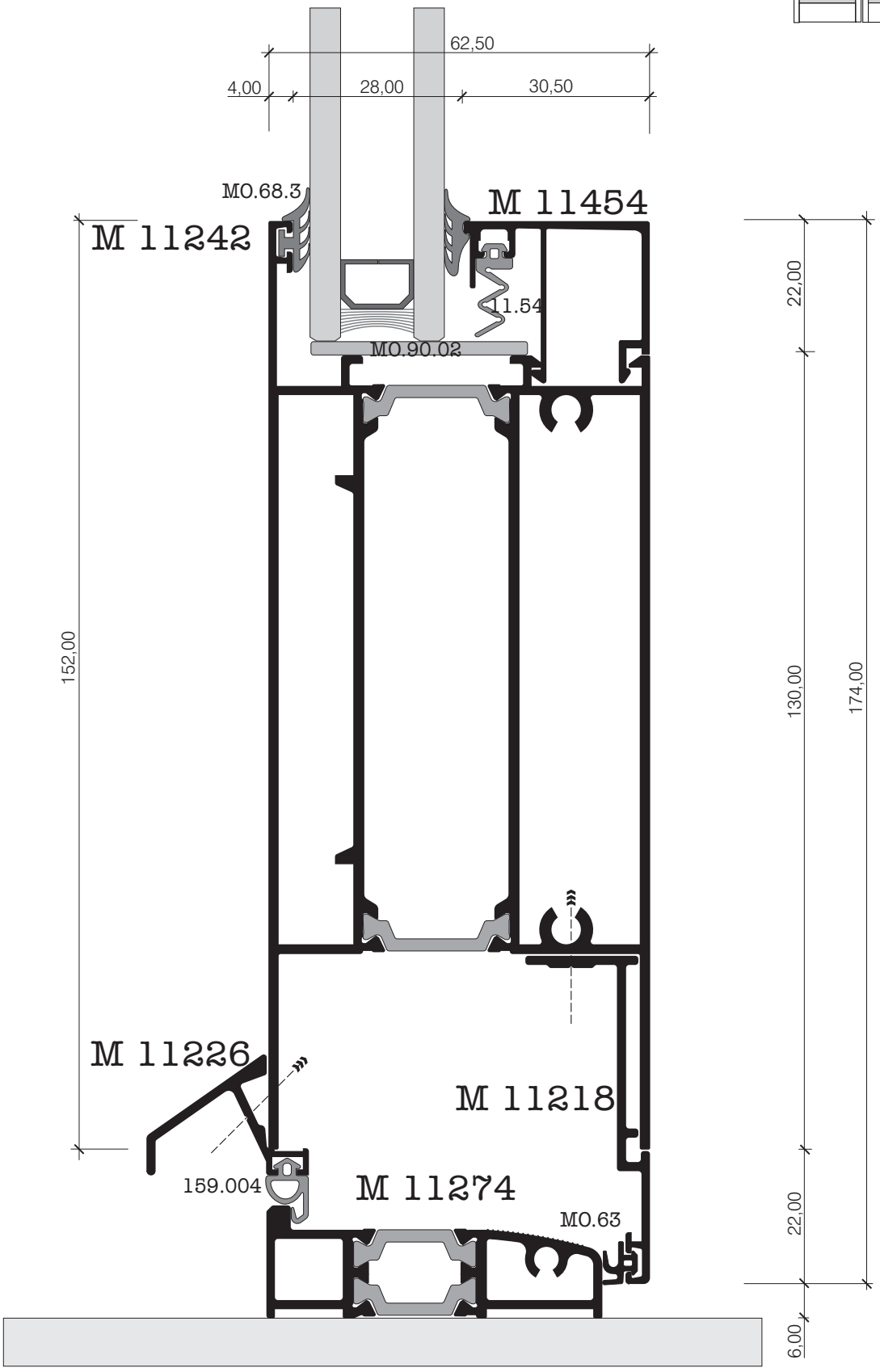
62,50
4,00
28,00
30,50
M0.68.3
M 11454
M 11242
11.54
M0.90.02
22,00
152,00
130,00
174,00
M 11226
M 11218
159.004
M 11274
M0.63
22,00
6,00

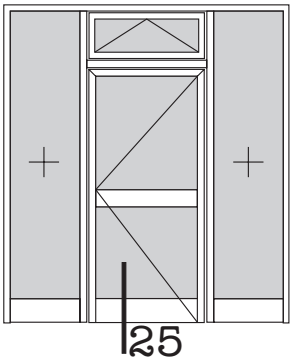
25

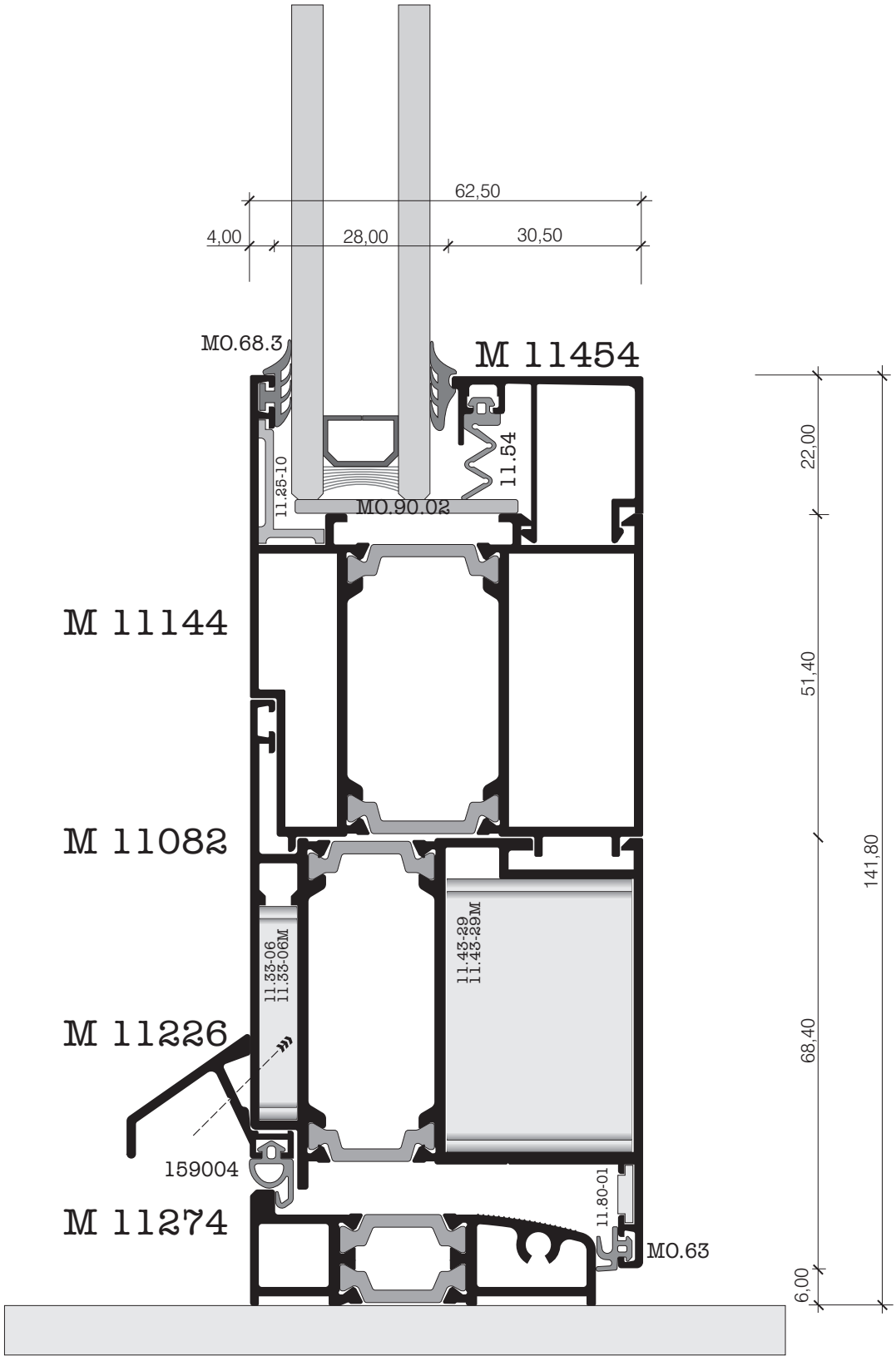
62,50
4,00
28,00
30,50
M0.68.3
M 11454
11.54
11.25-10
M0.90.02
M 11144
M 11082
11.33-06
11.33-06M
11.43-29
11.43-29M
M 11226
159004
11.80-01
M 11274
M0.63
22,00
51,40
68,40
6,00
141,80

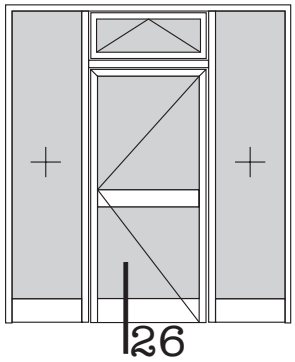
26

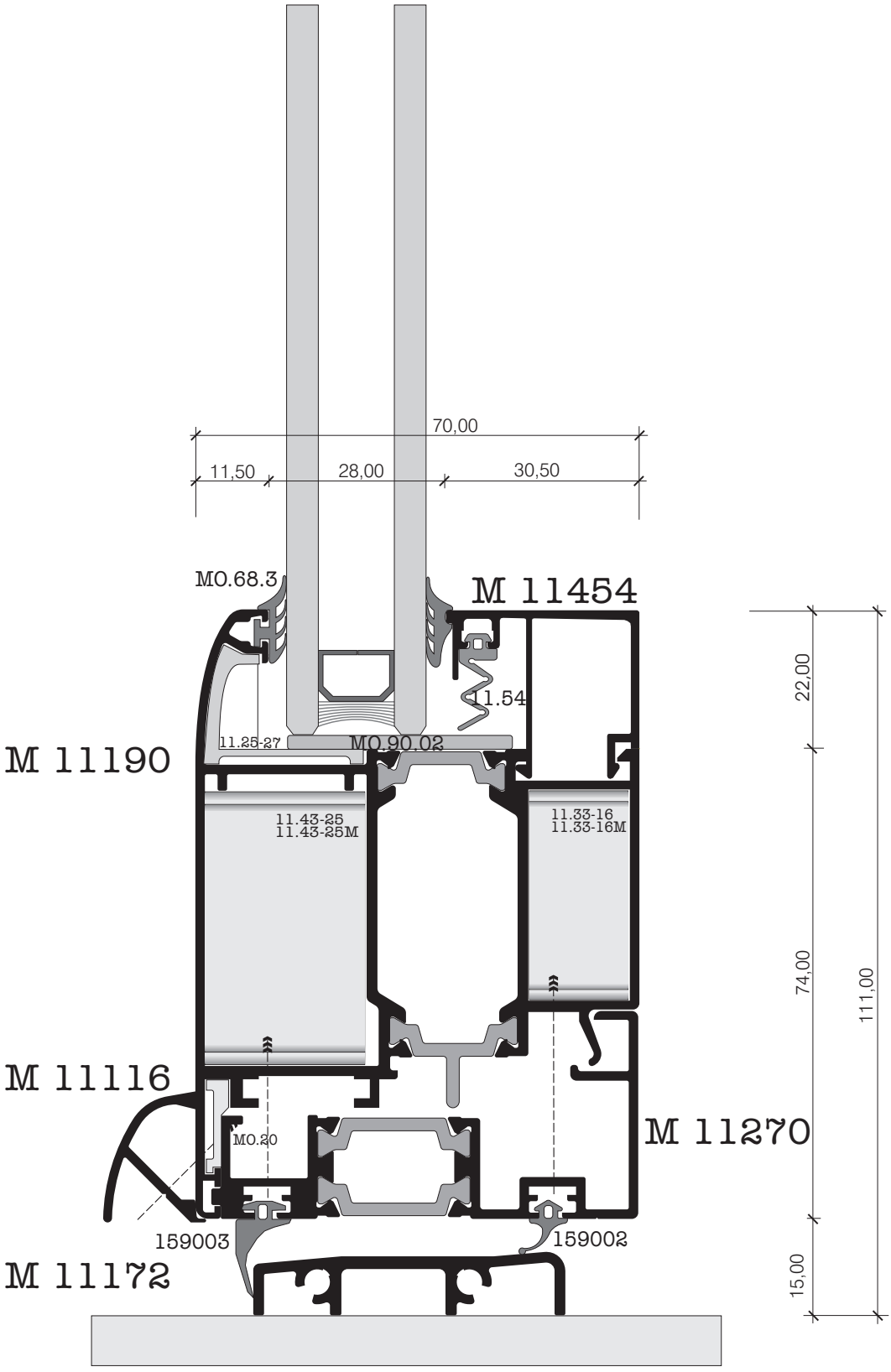
70,00
11,50
28,00
30,50
M0.68.3
M 11454
1.54
11.25-27
M0.90.02
M 11190
11.43-25
11.43-25M
11.33-16
11.33-16M
M 11116
M0.20
M 11270
159003
159002
M 11172
22,00
74,00
111,00
15,00

ΜΟΝΟΦΥΛΛΟ ΑΝΟΙΓΟΜΕΝΟ - ΠΡΟΒΑΛΛΟΜΕΝΟ
SINGLE LEAF CASEMENT/ TILT-N-TURN WINDOW

M 11026
M 11008

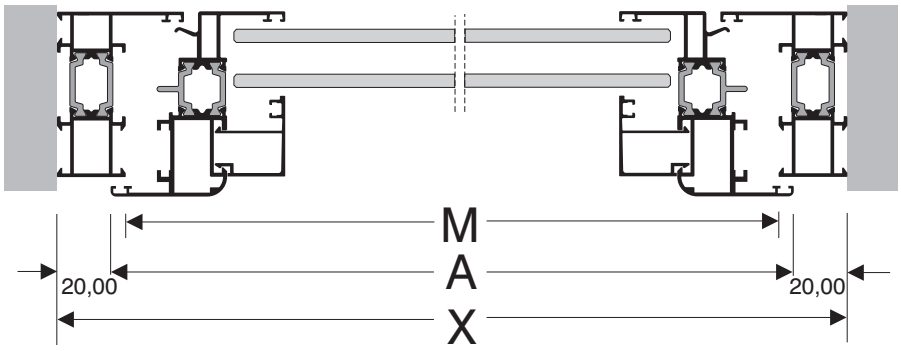

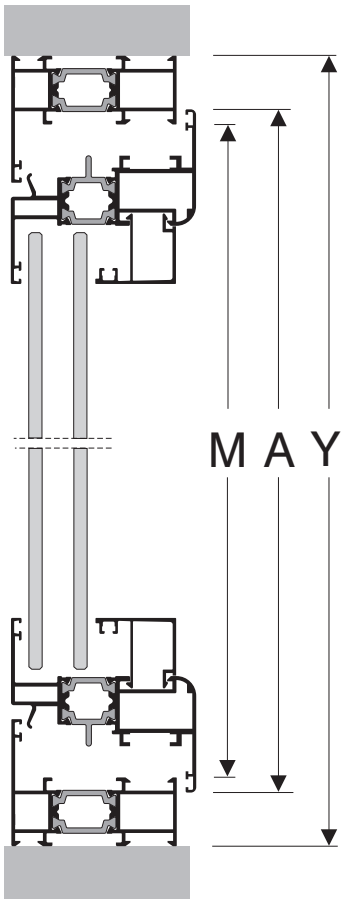

ΥΨΟΣ ή ΠΛΑΤΟΣ ΦΥΛΛΟΥ A = Y- 40 mm
(HEIGHT OR WIDTH OF SASH) η (or)
A=M+12 mm

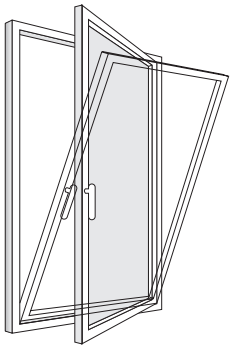

ΔΙΦΥΛΛΟ ΑΝΟΙΓΟΜΕΝΟ - ΠΡΟΒΑΛΛΟΜΕΝΟ
DOUBLE LEAF CASEMENT/ TILT-N-TURN WINDOW

M 11026
M 11008

M 11058

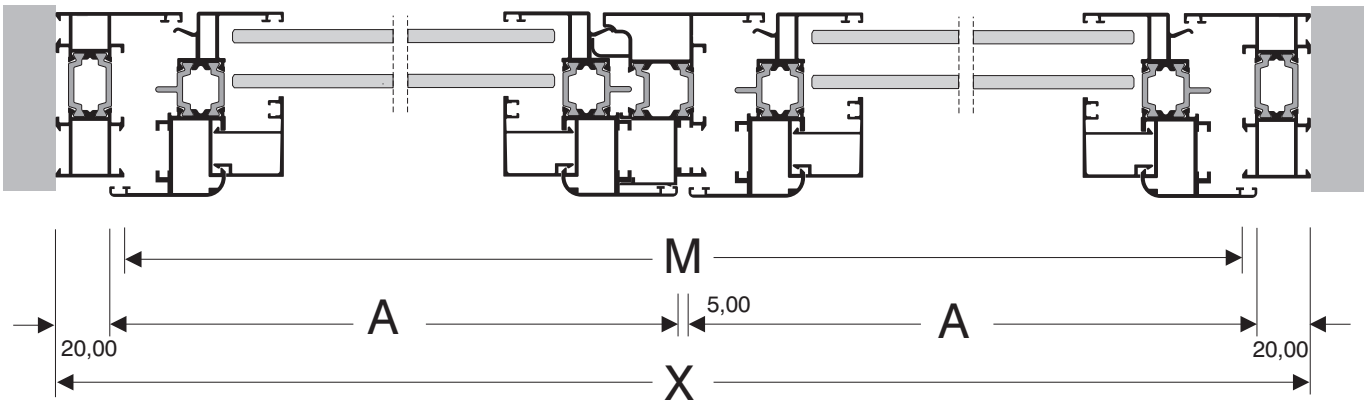

ΠΛΑΤΟΣ ΦΥΛΛΟΥ $A = \frac{X - 45}{2}$ mm η (or) $A = \frac{M+7}{2}$ mm
(WIDTH OF SASH)

ΥΨΟΣ ΦΥΛΛΟΥ A = Y - 40,00 mm η (or) A=M+12 mm
(HEIGHT OF SASH)

ΜΟΝΟΦΥΛΛΟ ΑΝΟΙΓΟΜΕΝΟ - ΠΡΟΒΑΛΛΟΜΕΝΟ

SINGLE LEAF CASEMENT/ TILT-N-TURN WINDOW

M 11149 M 11205
M 11020
M 11016
M 11010

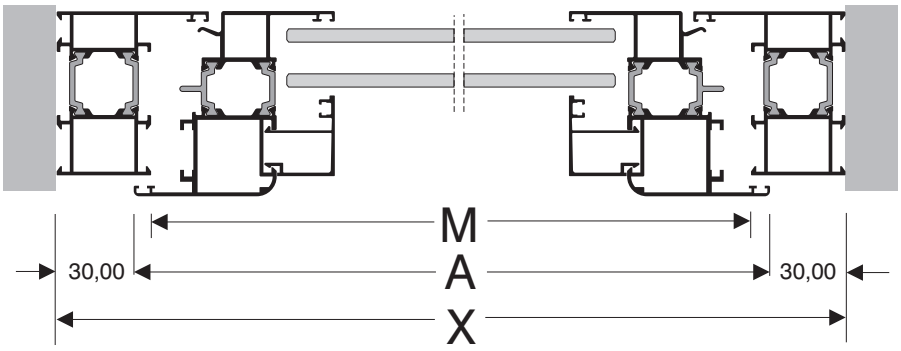

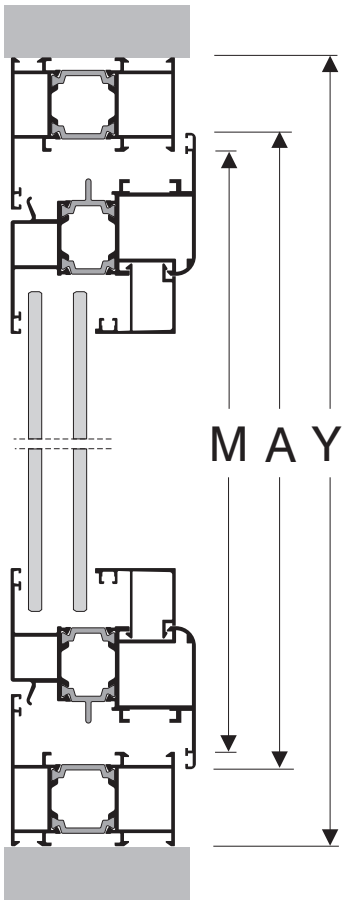

ΥΨΟΣ ή ΠΛΑΤΟΣ ΦΥΛΛΟΥ A = Y- 60 mm
(HEIGHT OR WIDTH OF SASH) η (or) A=M+12 mm

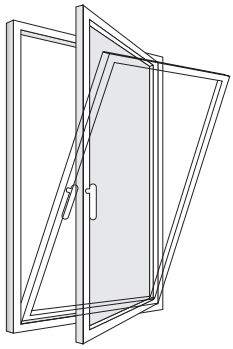

ΔΙΦΥΛΛΟ ΑΝΟΙΓΟΜΕΝΟ - ΠΡΟΒΑΛΛΟΜΕΝΟ

DOUBLE LEAF CASEMENT/ TILT-N-TURN WINDOW

M 11149 M 11205
M 11020
M 11016
M 11010

M 11058

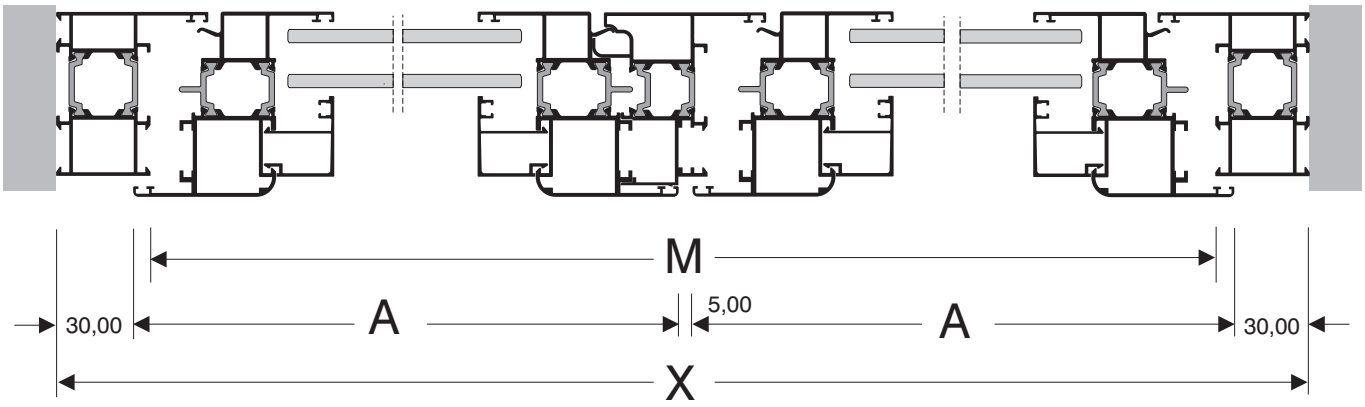

ΠΛΑΤΟΣ ΦΥΛΛΟΥ (WIDTH OF SASH) $A = \frac{X - 65}{2}$ mm η (or) $A = \frac{M+7}{2}$ mm

ΥΨΟΣ ΦΥΛΛΟΥ (HEIGHT OF SASH) A = Y - 60,00 mm η (or) A=M+12 mm

ΜΟΝΟΦΥΛΛΟ ΑΝΟΙΓΟΜΕΝΟ - ΠΡΟΒΑΛΛΟΜΕΝΟ

SINGLE LEAF CASEMENT/ TILT-N-TURN WINDOW

M 11168
M 11018
M 11014

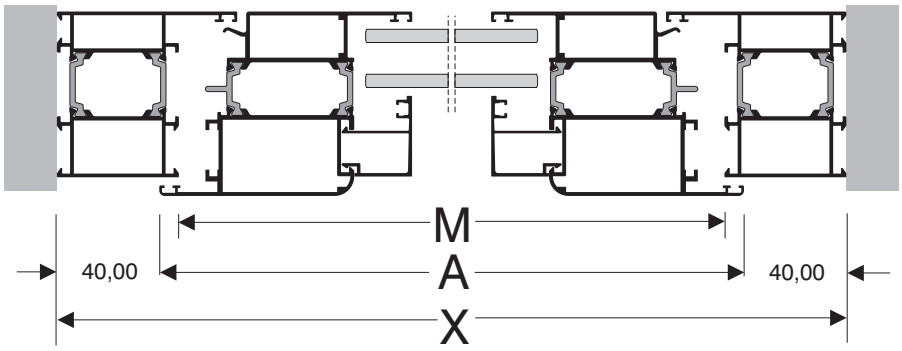

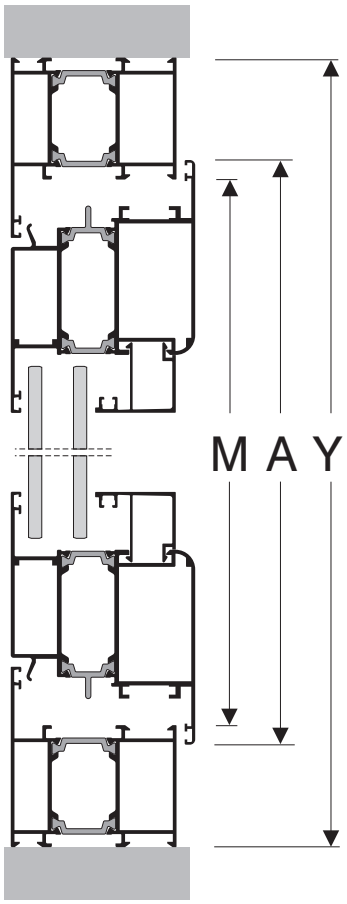

ΥΨΟΣ ή ΠΛΑΤΟΣ ΦΥΛΛΟΥ (HEIGHT OR WIDTH OF SASH) η(or)

A = Y- 80 mm

A=M+12 mm

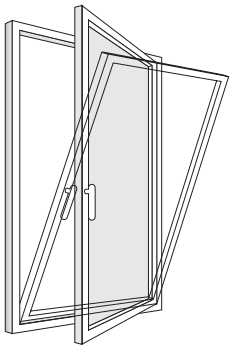

ΔΙΦΥΛΛΟ ΑΝΟΙΓΟΜΕΝΟ - ΠΡΟΒΑΛΛΟΜΕΝΟ

DOUBLE LEAF CASEMENT/ TILT-N-TURN WINDOW

M 11168
M 11018
M 11014

M 11058

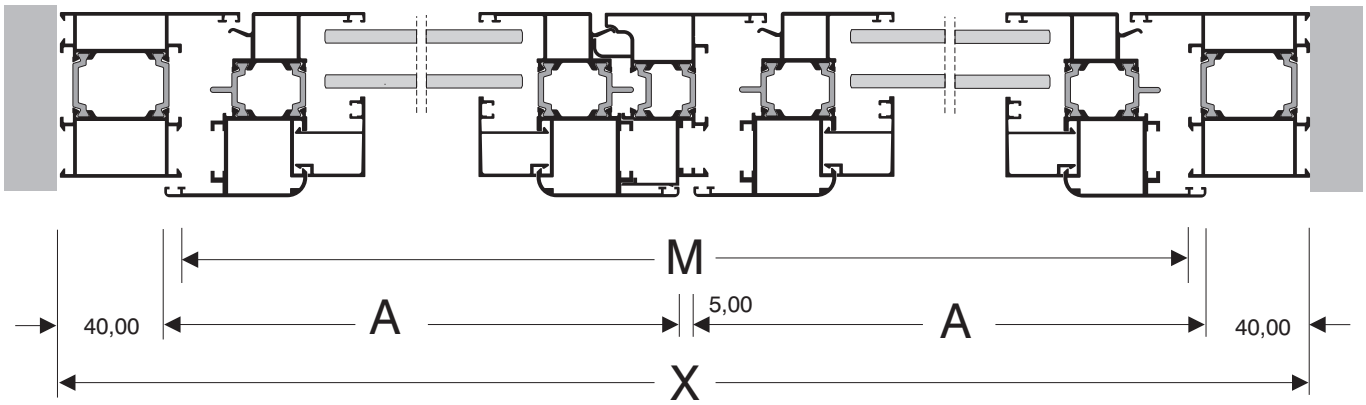

ΠΛΑΤΟΣ ΦΥΛΛΟΥ (WIDTH OF SASH) $A = \frac{X - 85}{2}$ mm η (or) $A = \frac{M+7}{2}$ mm

ΥΨΟΣ ΦΥΛΛΟΥ (HEIGHT OF SASH) A = Y - 80,00 mm η (or) A=M+12 mm

M 11010

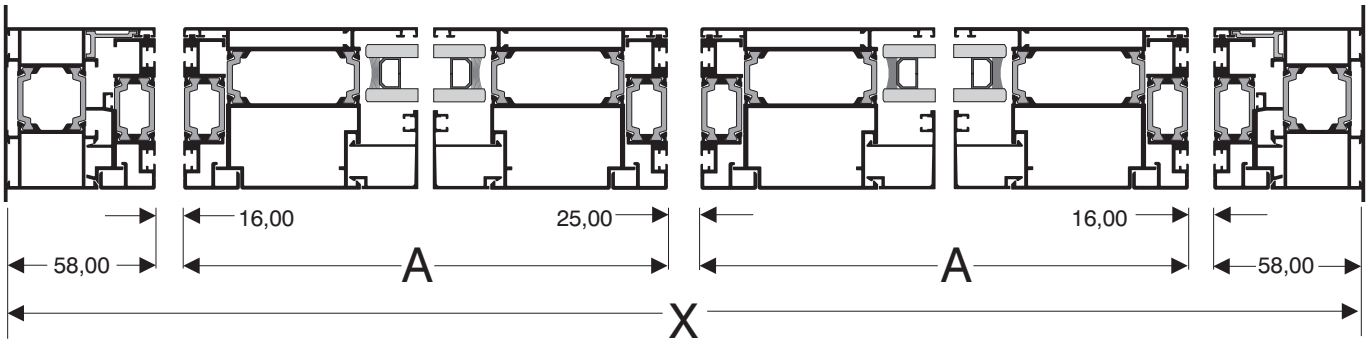

ΠΛΑΤΟΣ ΦΥΛΛΟΥ (WIDTH OF SASH)	$A = \frac{X - 173}{2}$ mm
ΥΨΟΣ ΦΥΛΛΟΥ (HEIGHT OF SASH)	B = Y- 73mm

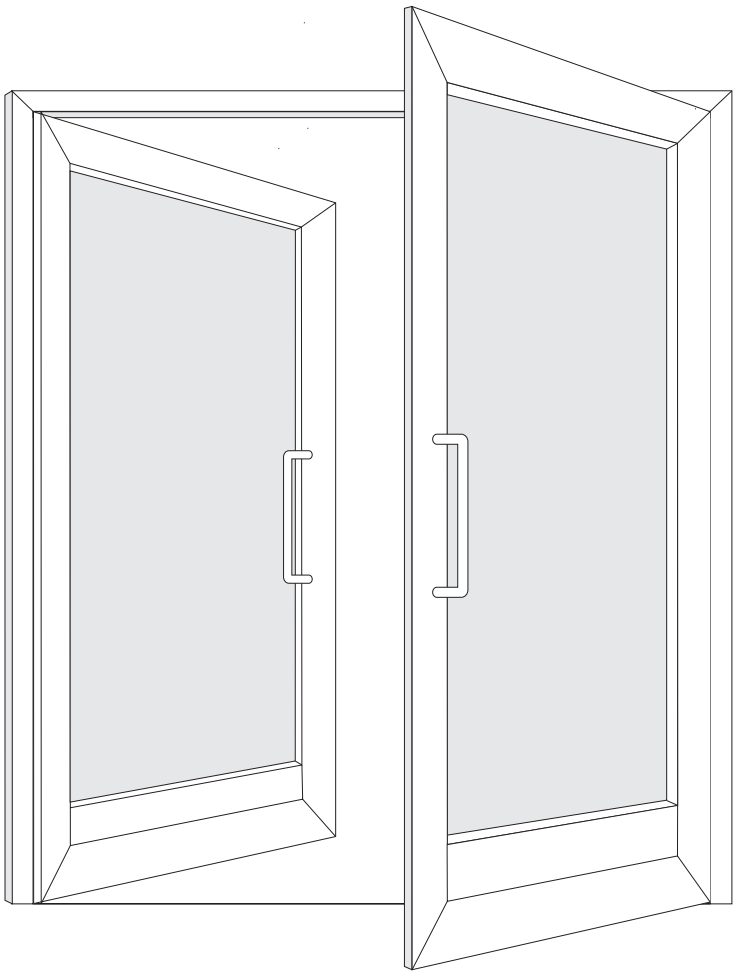

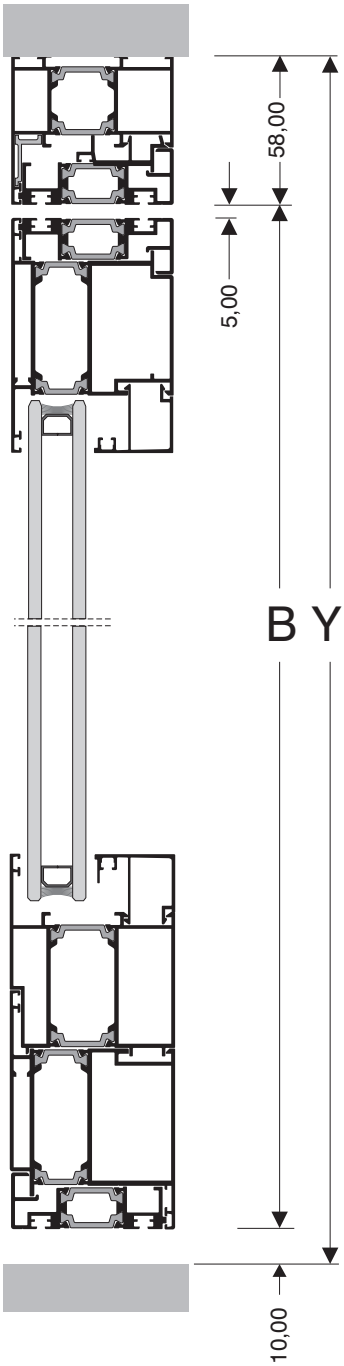

M 11168
M 11018
M 11014

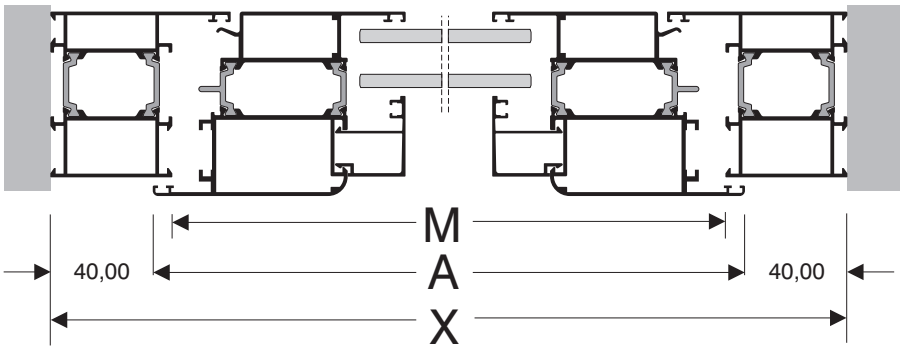

ΠΛΑΤΟΣ ΦΥΛΛΟΥ (WIDTH OF SASH)	η (or)	A = X- 80mm A=M+12mm

ΥΨΟΣ ΦΥΛΛΟΥ (HEIGHT OF SASH)	η (or)	B = Y- 50mm B=N-4 mm

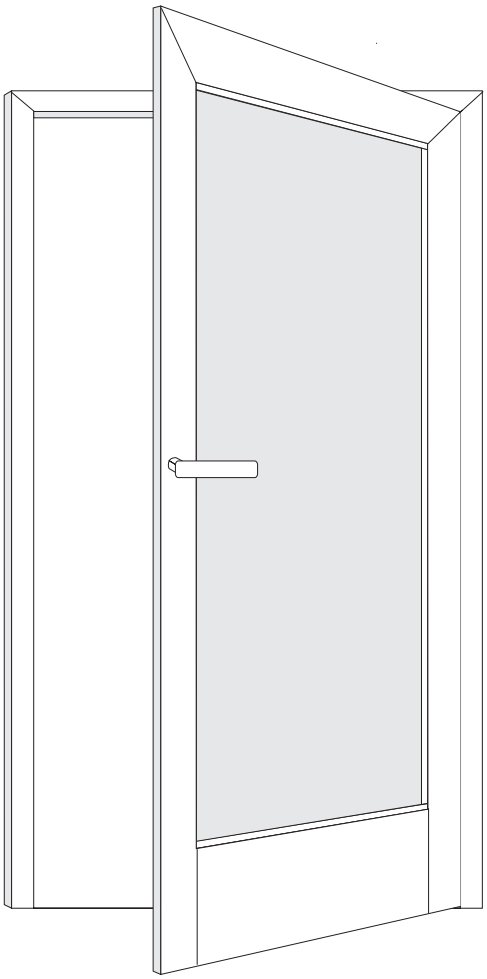

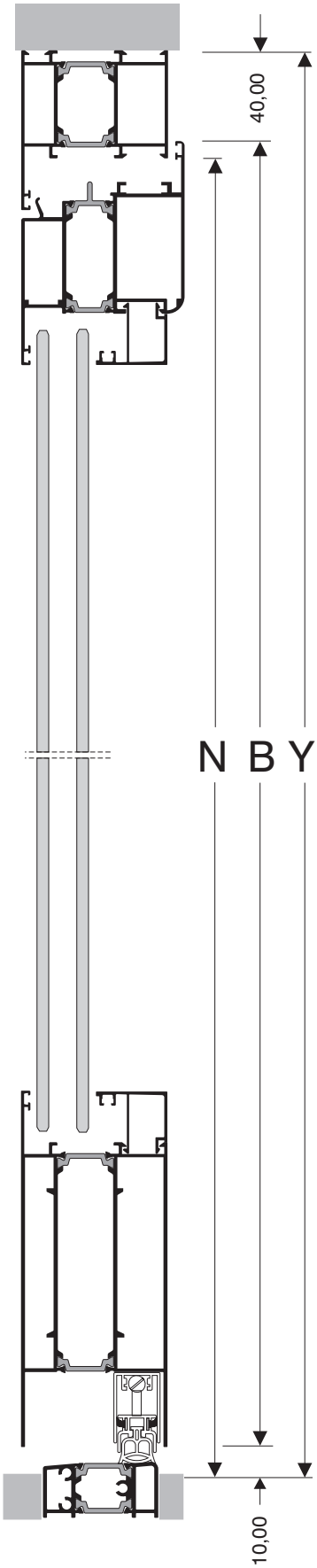

M 11088
M 11086

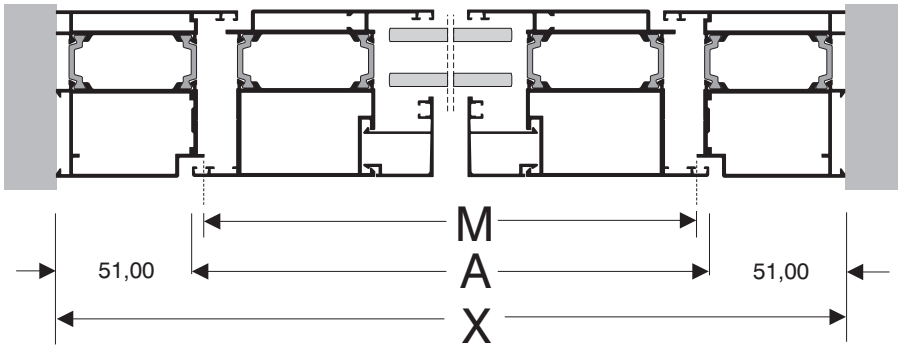

ΠΛΑΤΟΣ ΦΥΛΛΟΥ (WIDTH OF SASH)	A = X- 102 mm η (or) A=M+9 mm

ΥΨΟΣ ΦΥΛΛΟΥ (HEIGHT OF SASH)	B = Y- 57mm η (or) B=N-1,5mm

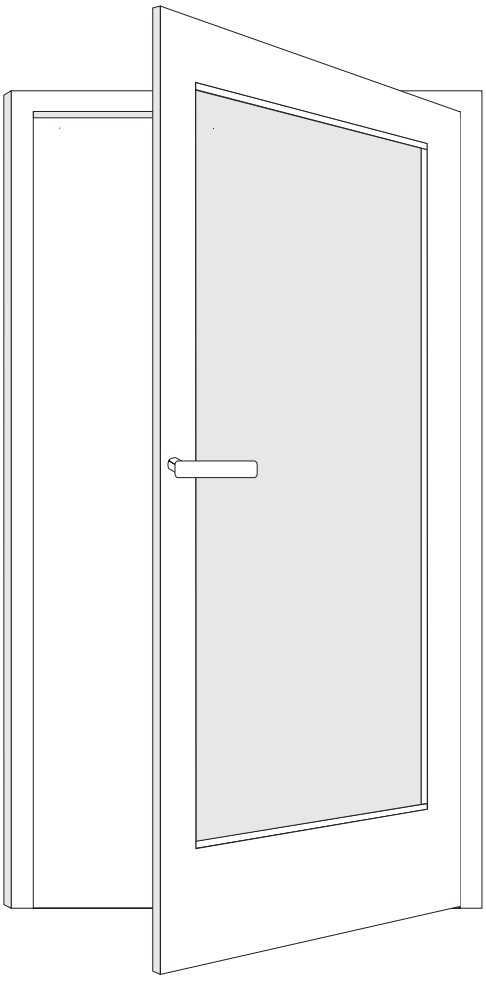

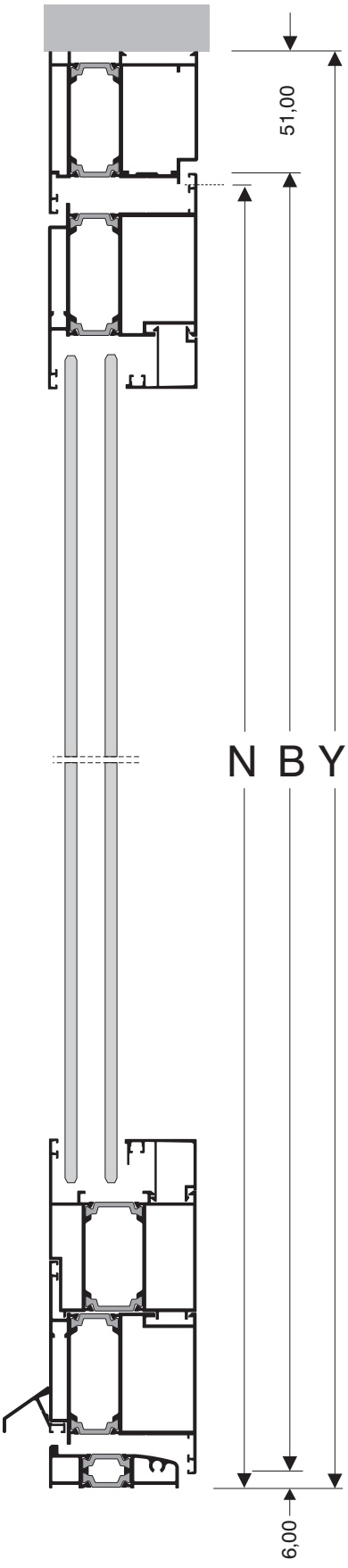

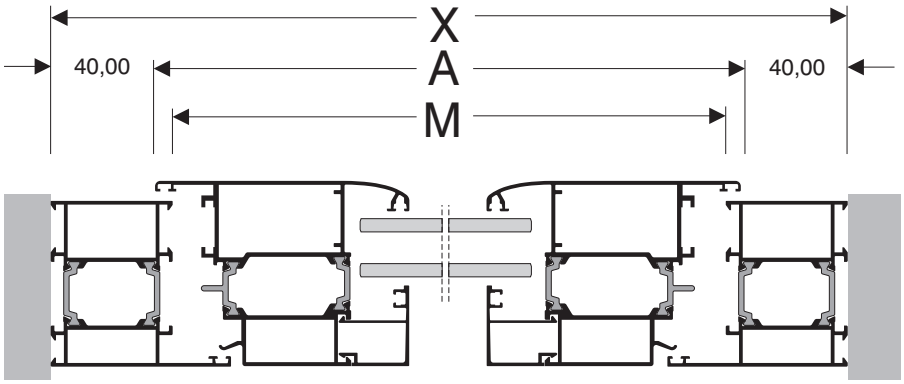

M 11168
M 11018
M 11014

ΠΛΑΤΟΣ ΦΥΛΛΟΥ (WIDTH OF SASH)	A = X- 80 mm η (or) A = M+12 mm

ΥΨΟΣ ΦΥΛΛΟΥ (HEIGHT OF SASH)	B = Y- 55 mm η (or) B = N- 9 mm

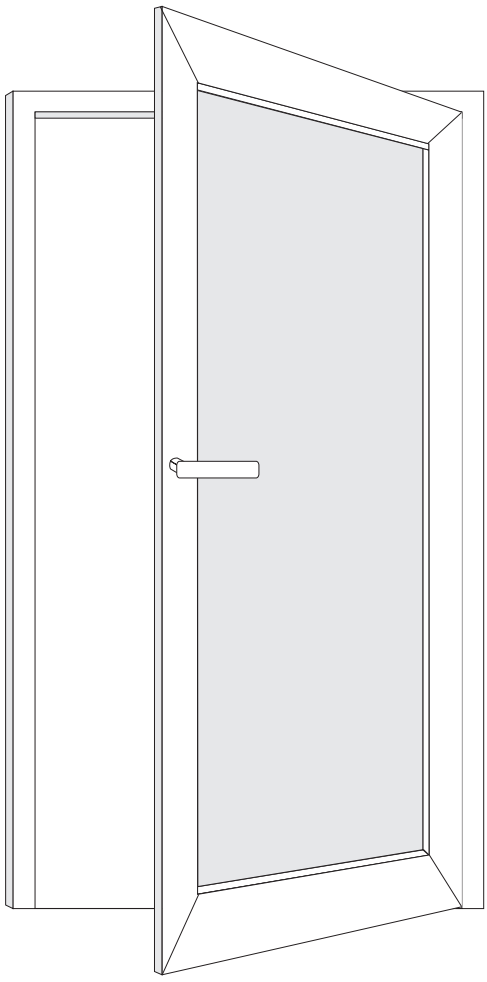

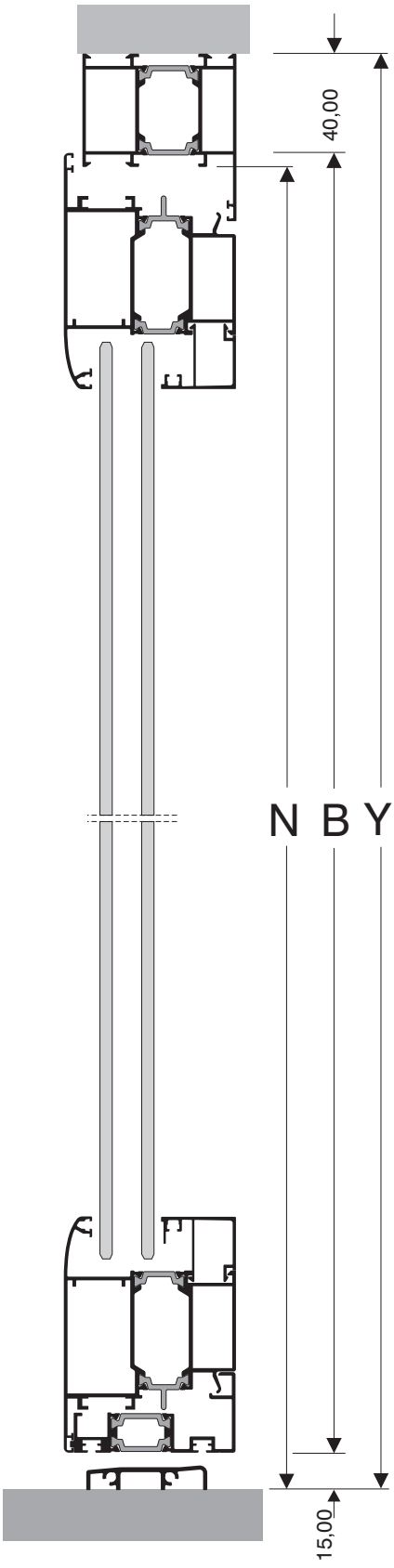

M 11088
M 11086

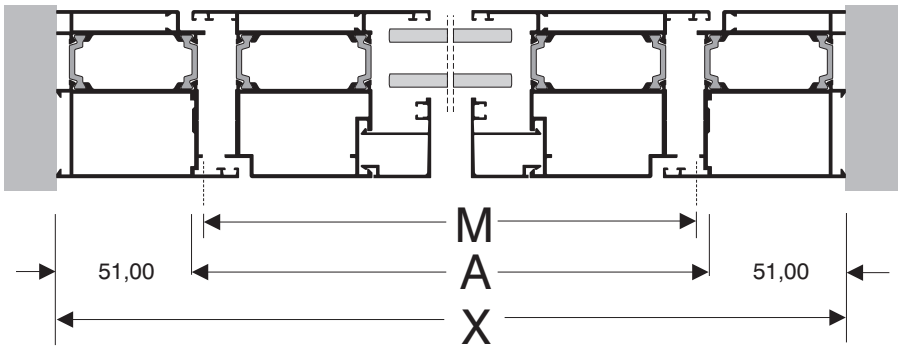

ΠΛΑΤΟΣ ΦΥΛΛΟΥ (WIDTH OF SASH)	A = X- 102 mm η (or) A=M+9 mm
ΥΨΟΣ ΦΥΛΛΟΥ (HEIGHT OF SASH)	B = Y- 66 mm η (or) B=N-10,5 mm

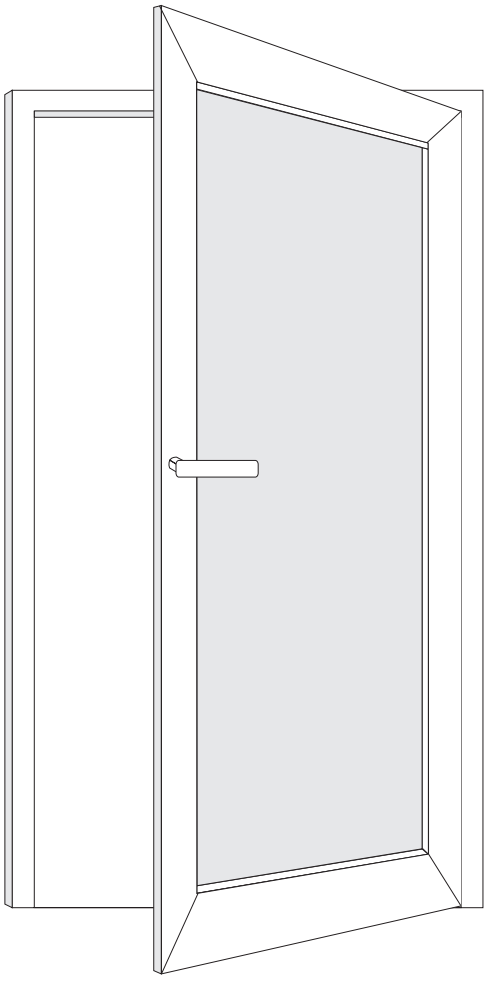

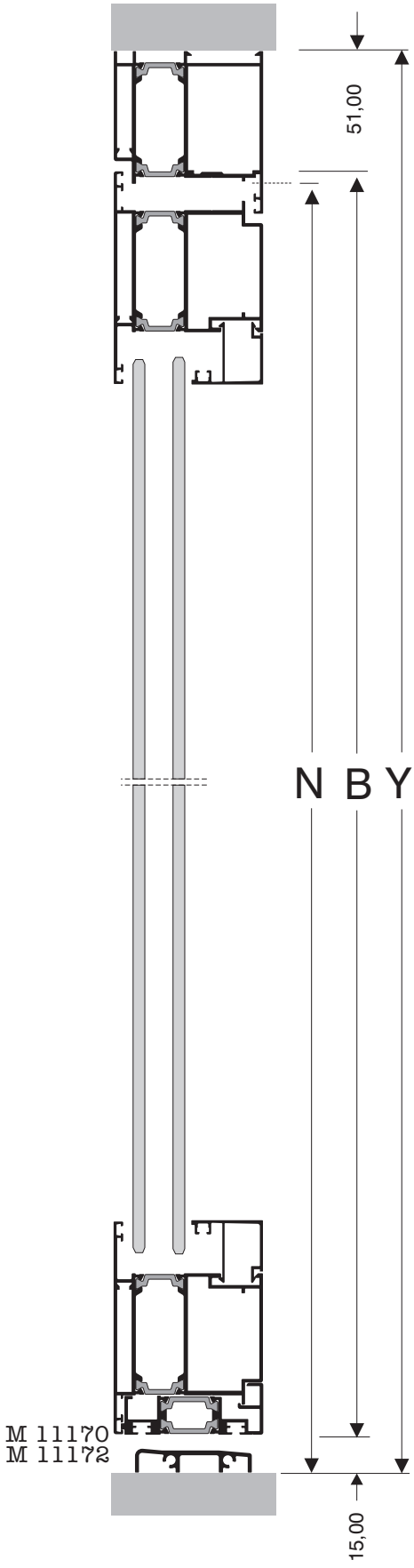

ΠΟΡΤΑ ΔΙΠΛΗ
DOUBLE DOORS

M 11168
M 11018
M 11014

M 11058

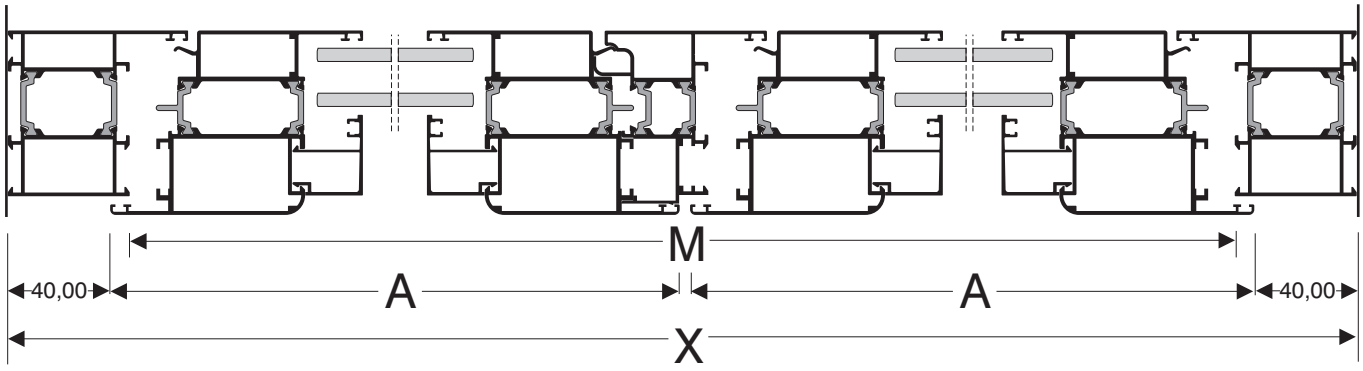

ΠΛΑΤΟΣ ΦΥΛΛΟΥ (WIDTH OF SASH) $A = \frac{X - 85}{2}$ mm ή (or) $A = \frac{M+7}{2}$ mm

ΥΨΟΣ ΦΥΛΛΟΥ (HEIGHT OF SASH) B = Y- 50mm η (or) B=N-4 mm

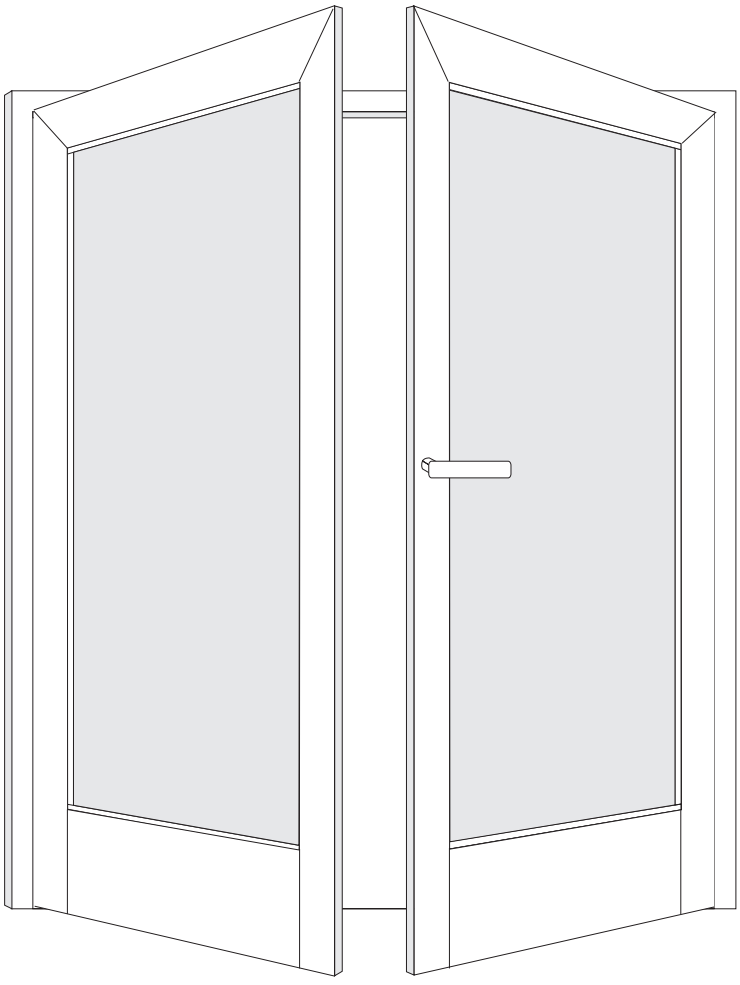

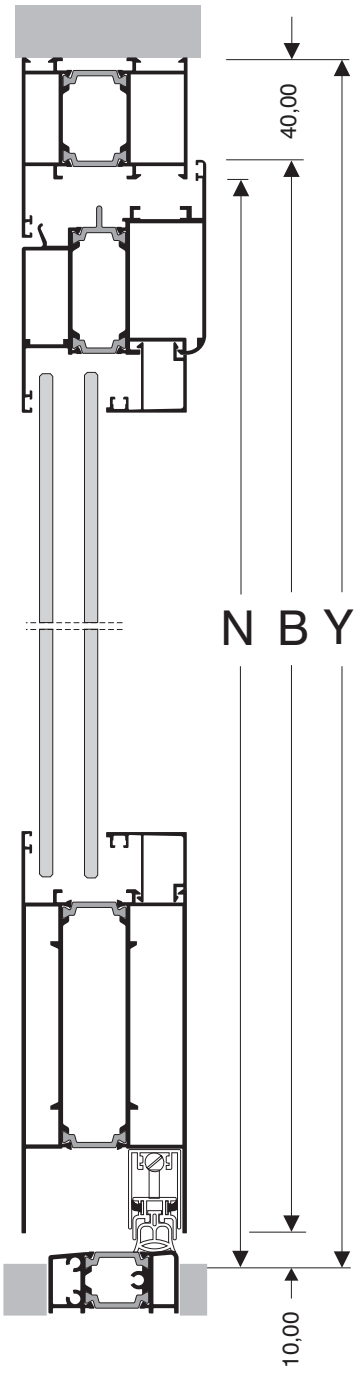

M 11088
M 11086

M 11158

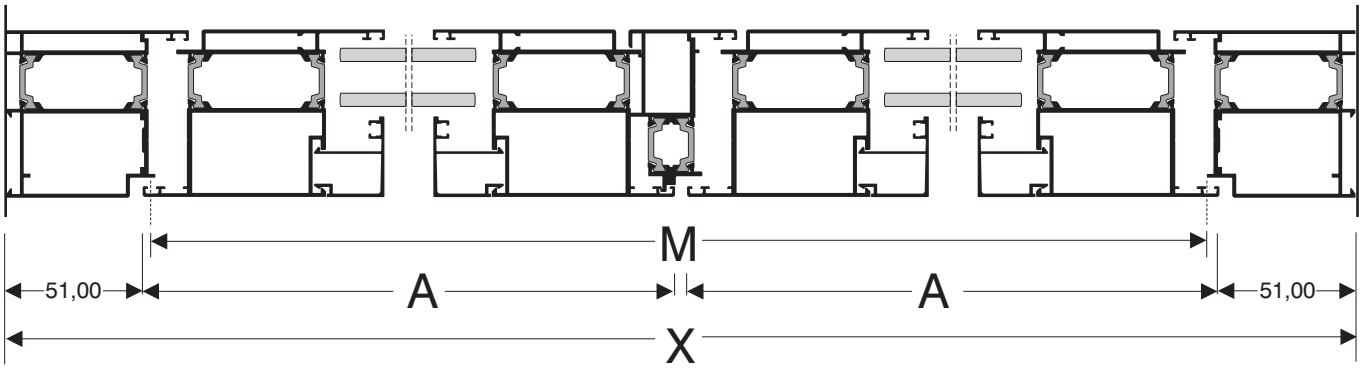

ΠΛΑΤΟΣ ΦΥΛΛΟΥ (WIDTH OF SASH) $A = \frac{X - 107}{2}$ mm ή (or) $A = \frac{M+4}{2}$ mm

ΥΨΟΣ ΦΥΛΛΟΥ (HEIGHT OF SASH) B = Y- 57mm η (or) B=N-1,5mm

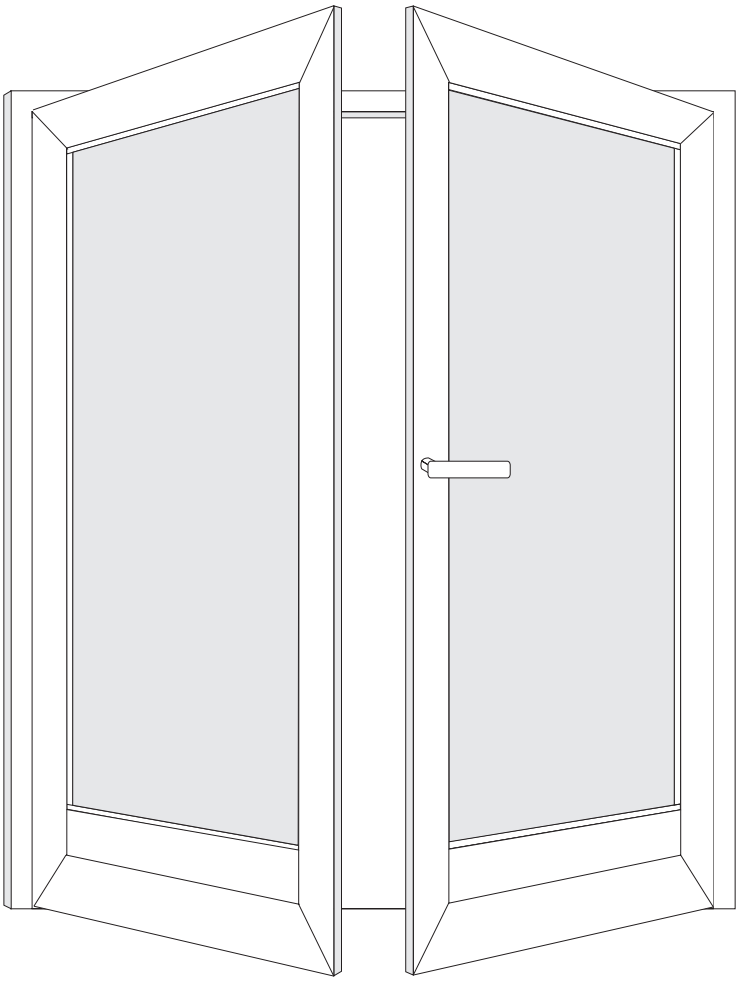

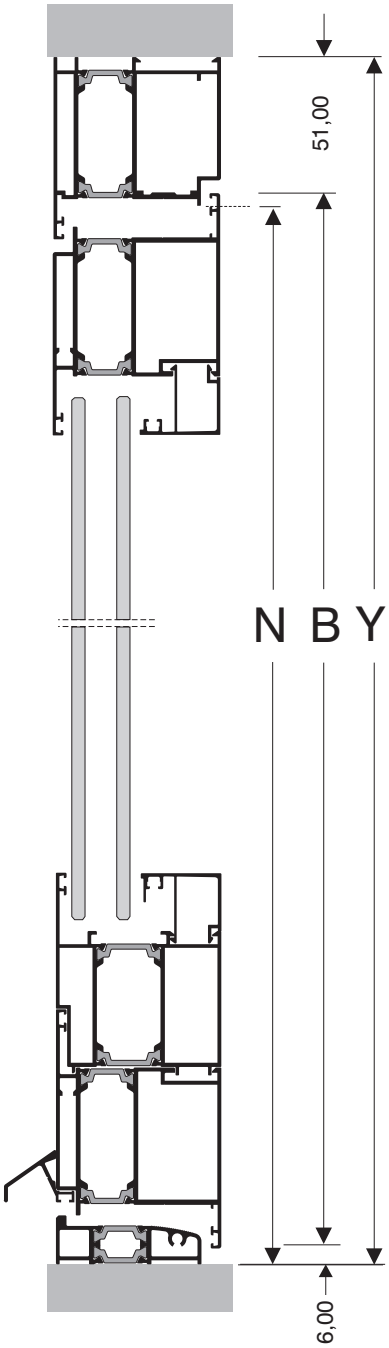

ACCESSORIES

M11000

ALUTHERM PLUS

11.05-**

11.05-16
11.05-27
11.05-34

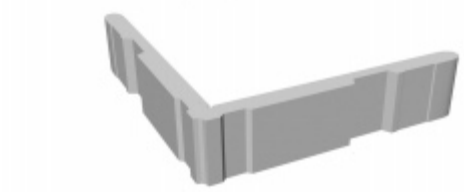

ΥΨΟΣ ΘΑΛΑΜΟΥ *HEIGHT CHAMBER*
ΠΛΑΤΟΣ ΘΑΛΑΜΟΥ *WIDTH CHAMBER*

ΠΕΡΙΓΡΑΦΗ: *DESCRIPTION:*	ΓΩΝΙΑ ΣΥΝΔΕΣΗΣ ΠΡΕΣΣΑΡΙΣΤΗ *EXTRUDED ALUMINIUM PRESS CORNER*
ΥΛΙΚΟ: *MATERIAL:*	ΑΛΟΥΜΙΝΙΟ *ALUMINIUM*
ΧΡΩΜΑ: *COLOR:*	ΑΒΑΦΟ *MILL FINISH*

11.13-**

11.13-12
11.13-16
11.13-20
11.13-27
11.13-34

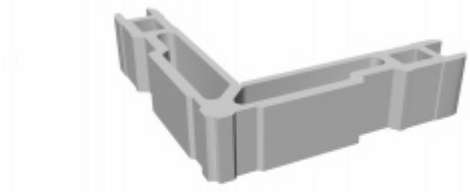

ΥΨΟΣ ΘΑΛΑΜΟΥ *HEIGHT CHAMBER*
ΠΛΑΤΟΣ ΘΑΛΑΜΟΥ *WIDTH CHAMBER*

ΠΕΡΙΓΡΑΦΗ: *DESCRIPTION:*	ΓΩΝΙΑ ΣΥΝΔΕΣΗΣ ΠΡΕΣΣΑΡΙΣΤΗ *EXTRUDED ALUMINIUM PRESS CORNER*
ΥΛΙΚΟ: *MATERIAL:*	ΑΛΟΥΜΙΝΙΟ *ALUMINIUM*
ΧΡΩΜΑ: *COLOR:*	ΑΒΑΦΟ *MILL FINISH*

11.15-**

11.15-16
11.15-27
11.15-34

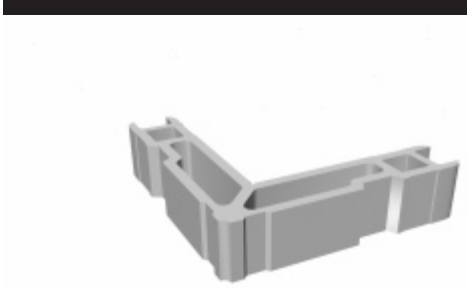

ΥΨΟΣ ΘΑΛΑΜΟΥ *HEIGHT CHAMBER*
ΠΛΑΤΟΣ ΘΑΛΑΜΟΥ *WIDTH CHAMBER*

ΠΕΡΙΓΡΑΦΗ: *DESCRIPTION:*	ΓΩΝΙΑ ΣΥΝΔΕΣΗΣ ΠΡΕΣΣΑΡΙΣΤΗ *EXTRUDED ALUMINIUM PRESS CORNER*
ΥΛΙΚΟ: *MATERIAL:*	ΑΛΟΥΜΙΝΙΟ *ALUMINIUM*
ΧΡΩΜΑ: *COLOR:*	ΑΒΑΦΟ *MILL FINISH*

11.23-**

11.23-05
11.23-12
11.23-16
11.23-20
11.23-25
11.23-27
11.23-34

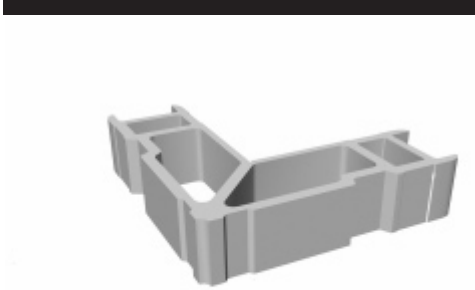

ΥΨΟΣ ΘΑΛΑΜΟΥ *HEIGHT CHAMBER*
ΠΛΑΤΟΣ ΘΑΛΑΜΟΥ *WIDTH CHAMBER*

ΠΕΡΙΓΡΑΦΗ: *DESCRIPTION:*	ΓΩΝΙΑ ΣΥΝΔΕΣΗΣ ΠΡΕΣΣΑΡΙΣΤΗ *EXTRUDED ALUMINIUM PRESS CORNER*
ΥΛΙΚΟ: *MATERIAL:*	ΑΛΟΥΜΙΝΙΟ *ALUMINIUM*
ΧΡΩΜΑ: *COLOR:*	ΑΒΑΦΟ *MILL FINISH*

11.33-**

11.33-06
11.33-12
11.33-16
11.33-20
11.33-27
11.33-32
11.33-34

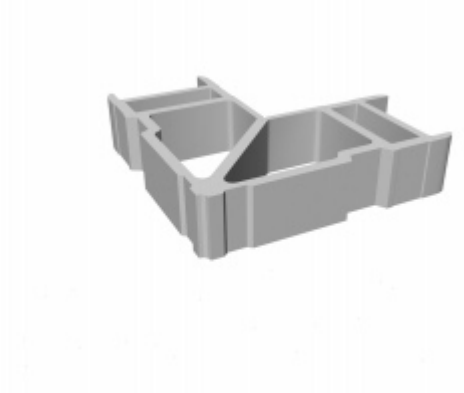

ΥΨΟΣ ΘΑΛΑΜΟΥ *HEIGHT CHAMBER*
ΠΛΑΤΟΣ ΘΑΛΑΜΟΥ *WIDTH CHAMBER*

ΠΕΡΙΓΡΑΦΗ: *DESCRIPTION:*	ΓΩΝΙΑ ΣΥΝΔΕΣΗΣ ΠΡΕΣΣΑΡΙΣΤΗ *EXTRUDED ALUMINIUM PRESS CORNER*
ΥΛΙΚΟ: *MATERIAL:*	ΑΛΟΥΜΙΝΙΟ *ALUMINIUM*
ΧΡΩΜΑ: *COLOR:*	ΑΒΑΦΟ *MILL FINISH*

11.38-**

11.38-25

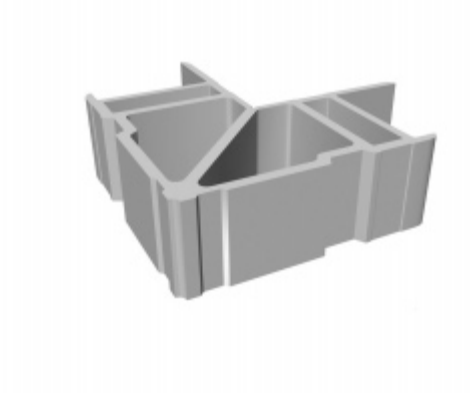

ΥΨΟΣ ΘΑΛΑΜΟΥ *HEIGHT CHAMBER*
ΠΛΑΤΟΣ ΘΑΛΑΜΟΥ *WIDTH CHAMBER*

ΠΕΡΙΓΡΑΦΗ: *DESCRIPTION:*	ΓΩΝΙΑ ΣΥΝΔΕΣΗΣ ΠΡΕΣΣΑΡΙΣΤΗ *EXTRUDED ALUMINIUM PRESS CORNER*
ΥΛΙΚΟ: *MATERIAL:*	ΑΛΟΥΜΙΝΙΟ *ALUMINIUM*
ΧΡΩΜΑ: *COLOR:*	ΑΒΑΦΟ *MILL FINISH*

11.43-**

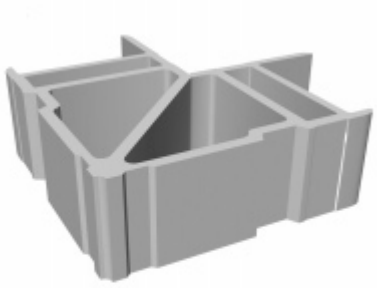

11.43-06
11.43-08
11.43-19
11.43-20
11.43-22
11.43-25
11.43-27
11.43-29
11.43-32
11.43-34

ΥΨΟΣ ΘΑΛΑΜΟΥ *HEIGHT CHAMBER*
ΠΛΑΤΟΣ ΘΑΛΑΜΟΥ *WIDTH CHAMBER*

ΠΕΡΙΓΡΑΦΗ: *DESCRIPTION:*	ΓΩΝΙΑ ΣΥΝΔΕΣΗΣ ΠΡΕΣΣΑΡΙΣΤΗ *EXTRUDED ALUMINIUM PRESS CORNER*
ΥΛΙΚΟ: *MATERIAL:*	ΑΛΟΥΜΙΝΙΟ *ALUMINIUM*
ΧΡΩΜΑ: *COLOR:*	ΑΒΑΦΟ *MILL FINISH*

ΜΟ.20.00

ΠΕΡΙΓΡΑΦΗ: *DESCRIPTION:*	ΓΩΝΙΑ ΕΠΙΠΕΔΟΤΗΤΑΣ *PLASTIC ALIGNMENT SQUARE*
ΥΛΙΚΟ: *MATERIAL:*	ΠΟΛΥΑΜΙΔΙΟ 6.6 *POLYAMIDE 6.6*
ΧΡΩΜΑ: *COLOR:*	ΜΑΥΡΟ *BLACK*

AT.219

ΠΕΡΙΓΡΑΦΗ: *DESCRIPTION:*	ΓΩΝΙΑ ΣΥΝΔΕΣΗΣ ΜΗΧΑΝΙΚΗ ΓΙΑ ΚΑΣΕΣ *MECHANICAL JOINT CORNER FOR FRAMES*
ΥΛΙΚΟ: *MATERIAL:*	ΜΕΤΑΛΛΙΚΗ *GALVANIZED STEEL*
ΧΡΩΜΑ: *COLOR:*	ΑΒΑΦΟ *MILL FINISH*

11.80-01

ΠΕΡΙΓΡΑΦΗ: *DESCRIPTION:*	ΓΩΝΙΑ ΕΠΙΠΕΔΟΤΗΤΑΣ *PLASTIC ALIGNMENT SQUARE*
ΥΛΙΚΟ: *MATERIAL:*	ΠΟΛΥΑΜΙΔΙΟ 6.6 *POLYAMIDE 6.6*
ΧΡΩΜΑ: *COLOR:*	ΜΑΥΡΟ *BLACK*

ΜΟ.19.00

ΠΕΡΙΓΡΑΦΗ: *DESCRIPTION:*	ΓΩΝΙΑ ΕΠΙΠΕΔΟΤΗΤΑΣ *STEEL ALIGNMENT SQUARE*
ΥΛΙΚΟ: *MATERIAL:*	ΑΤΣΑΛΙ *STAINLESS STEEL*
ΧΡΩΜΑ: *COLOR:*	ΑΒΑΦΟ *MILL FINISH*

11.11-9

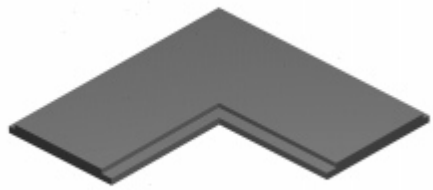

ΠΕΡΙΓΡΑΦΗ: *DESCRIPTION:*	ΓΩΝΙΑ ΕΠΙΠΕΔΟΤΗΤΑΣ *PLASTIC ALIGNMENT SQUARE*
ΥΛΙΚΟ: *MATERIAL:*	ΠΟΛΥΑΜΙΔΙΟ 6.6 *POLYAMIDE 6.6*
ΧΡΩΜΑ: *COLOR:*	ΜΑΥΡΟ *BLACK*

11.25-05

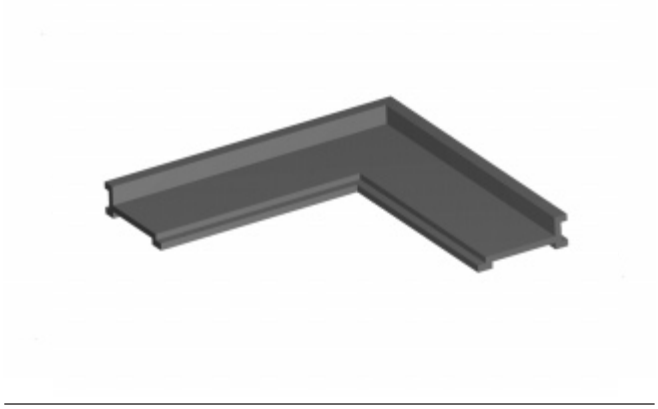

ΠΕΡΙΓΡΑΦΗ: *DESCRIPTION:*	ΓΩΝΙΑ ΕΠΙΠΕΔΟΤΗΤΑΣ *PLASTIC ALIGNMENT SQUARE*
ΥΛΙΚΟ: *MATERIAL:*	ΠΟΛΥΑΜΙΔΙΟ 6.6 *POLYAMIDE 6.6*
ΧΡΩΜΑ: *COLOR:*	ΜΑΥΡΟ *BLACK*

11.25-08

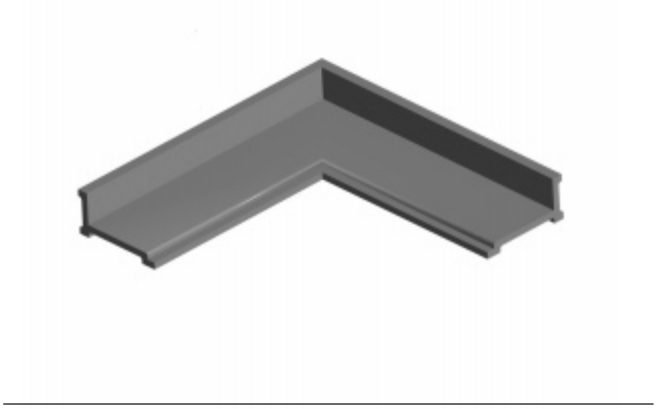

ΠΕΡΙΓΡΑΦΗ: *DESCRIPTION:*	ΓΩΝΙΑ ΕΠΙΠΕΔΟΤΗΤΑΣ *PLASTIC ALIGNMENT SQUARE*
ΥΛΙΚΟ: *MATERIAL:*	ΠΟΛΥΑΜΙΔΙΟ 6.6 *POLYAMIDE 6.6*
ΧΡΩΜΑ: *COLOR:*	ΜΑΥΡΟ *BLACK*

11.25-10

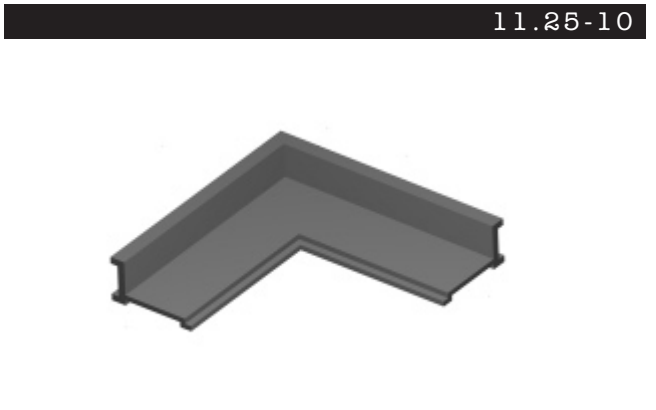

ΠΕΡΙΓΡΑΦΗ: *DESCRIPTION:*	ΓΩΝΙΑ ΕΠΙΠΕΔΟΤΗΤΑΣ *PLASTIC ALIGNMENT SQUARE*
ΥΛΙΚΟ: *MATERIAL:*	ΠΟΛΥΑΜΙΔΙΟ 6.6 *POLYAMIDE 6.6*
ΧΡΩΜΑ: *COLOR:*	ΜΑΥΡΟ *BLACK*

11.25-15

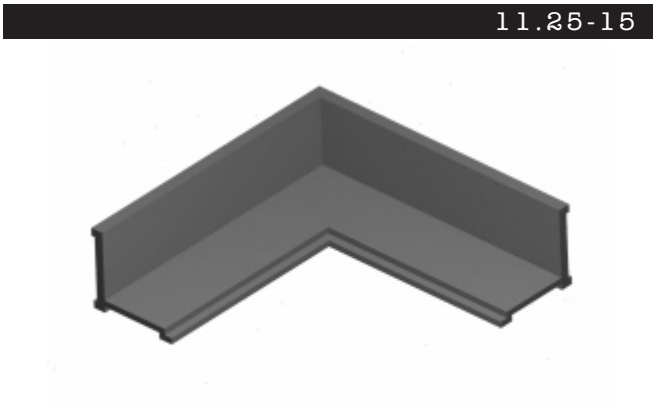

ΠΕΡΙΓΡΑΦΗ: *DESCRIPTION:*	ΓΩΝΙΑ ΕΠΙΠΕΔΟΤΗΤΑΣ *PLASTIC ALIGNMENT SQUARE*
ΥΛΙΚΟ: *MATERIAL:*	ΠΟΛΥΑΜΙΔΙΟ 6.6 *POLYAMIDE 6.6*
ΧΡΩΜΑ: *COLOR:*	ΜΑΥΡΟ *BLACK*

11.25-16

ΠΕΡΙΓΡΑΦΗ: *DESCRIPTION:*	ΓΩΝΙΑ ΕΠΙΠΕΔΟΤΗΤΑΣ *PLASTIC ALIGNMENT SQUARE*
ΥΛΙΚΟ: *MATERIAL:*	ΠΟΛΥΑΜΙΔΙΟ 6.6 *POLYAMIDE 6.6*
ΧΡΩΜΑ: *COLOR:*	ΜΑΥΡΟ *BLACK*

11.25-17

ΠΕΡΙΓΡΑΦΗ: *DESCRIPTION:*	ΓΩΝΙΑ ΕΠΙΠΕΔΟΤΗΤΑΣ *PLASTIC ALIGNMENT SQUARE*
ΥΛΙΚΟ: *MATERIAL:*	ΠΟΛΥΑΜΙΔΙΟ 6.6 *POLYAMIDE 6.6*
ΧΡΩΜΑ: *COLOR:*	ΜΑΥΡΟ *BLACK*

11.25-18

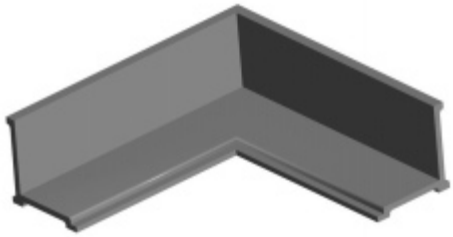

ΠΕΡΙΓΡΑΦΗ:	ΓΩΝΙΑ ΕΠΙΠΕΔΟΤΗΤΑΣ
DESCRIPTION:	*PLASTIC ALIGNMENT SQUARE*
ΥΛΙΚΟ:	ΠΟΛΥΑΜΙΔΙΟ 6.6
MATERIAL:	*POLYAMIDE 6.6*
ΧΡΩΜΑ:	ΜΑΥΡΟ
COLOR:	*BLACK*

11.25-20

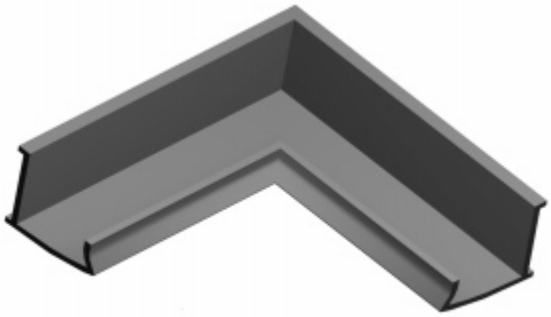

ΠΕΡΙΓΡΑΦΗ:	ΓΩΝΙΑ ΕΠΙΠΕΔΟΤΗΤΑΣ
DESCRIPTION:	*PLASTIC ALIGNMENT SQUARE*
ΥΛΙΚΟ:	ΠΟΛΥΑΜΙΔΙΟ 6.6
MATERIAL:	*POLYAMIDE 6.6*
ΧΡΩΜΑ:	ΜΑΥΡΟ
COLOR:	*BLACK*

11.25-25

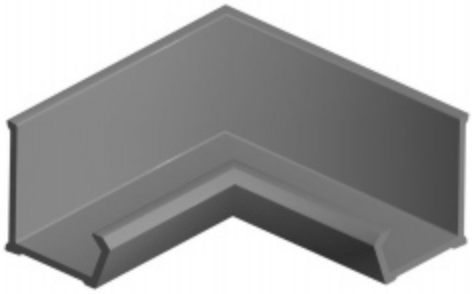

ΠΕΡΙΓΡΑΦΗ:	ΓΩΝΙΑ ΕΠΙΠΕΔΟΤΗΤΑΣ
DESCRIPTION:	*PLASTIC ALIGNMENT SQUARE*
ΥΛΙΚΟ:	ΠΟΛΥΑΜΙΔΙΟ 6.6
MATERIAL:	*POLYAMIDE 6.6*
ΧΡΩΜΑ:	ΜΑΥΡΟ
COLOR:	*BLACK*

11.25-26

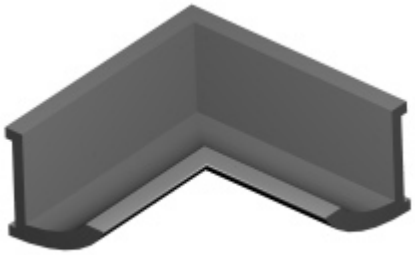

ΠΕΡΙΓΡΑΦΗ:	ΓΩΝΙΑ ΕΠΙΠΕΔΟΤΗΤΑΣ
DESCRIPTION:	*PLASTIC ALIGNMENT SQUARE*
ΥΛΙΚΟ:	ΠΟΛΥΑΜΙΔΙΟ 6.6
MATERIAL:	*POLYAMIDE 6.6*
ΧΡΩΜΑ:	ΜΑΥΡΟ
COLOR:	*BLACK*

11.25-27

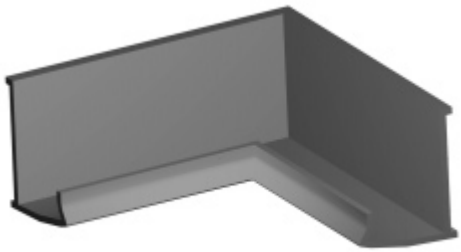

ΠΕΡΙΓΡΑΦΗ:	ΓΩΝΙΑ ΕΠΙΠΕΔΟΤΗΤΑΣ
DESCRIPTION:	*PLASTIC ALIGNMENT SQUARE*
ΥΛΙΚΟ:	ΠΟΛΥΑΜΙΔΙΟ 6.6
MATERIAL:	*POLYAMIDE 6.6*
ΧΡΩΜΑ:	ΜΑΥΡΟ
COLOR:	*BLACK*

11.25-33

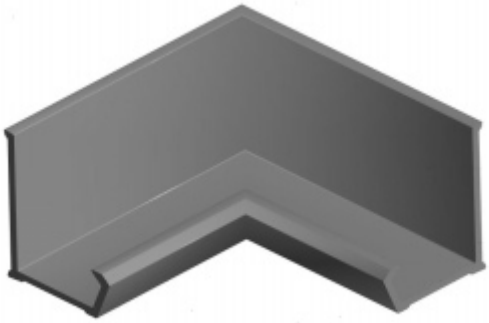

ΠΕΡΙΓΡΑΦΗ:	ΓΩΝΙΑ ΕΠΙΠΕΔΟΤΗΤΑΣ
DESCRIPTION:	*PLASTIC ALIGNMENT SQUARE*
ΥΛΙΚΟ:	ΠΟΛΥΑΜΙΔΙΟ 6.6
MATERIAL:	*POLYAMIDE 6.6*
ΧΡΩΜΑ:	ΜΑΥΡΟ
COLOR:	*BLACK*

ERT.500.113

ΠΕΡΙΓΡΑΦΗ: *DESCRIPTION:*	ΣΠΑΝΙΟΛΕΤΑ ΑΝΟΙΓΟΜΕΝΟΥ "MAXIMA" HANDLE CASEMENT SINGLE ACTION "MAXIMA"
ΥΛΙΚΟ: *MATERIAL:*	ΑΛΟΥΜΙΝΙΟ *ALUMINIUM*
ΧΡΩΜΑ: *COLOR:*	ΛΕΥΚΗ *WHITE*

ERT.500.111

ΠΕΡΙΓΡΑΦΗ: *DESCRIPTION:*	ΣΠΑΝΙΟΛΕΤΑ ΜΗΧΑΝΙΣΜΟΥ "MAXIMA" HANDLE CASEMENT DOUBLE ACTION"MAXIMA"
ΥΛΙΚΟ: *MATERIAL:*	ΑΛΟΥΜΙΝΙΟ *ALUMINIUM*
ΧΡΩΜΑ: *COLOR:*	ΛΕΥΚΗ *WHITE*

MO.9665

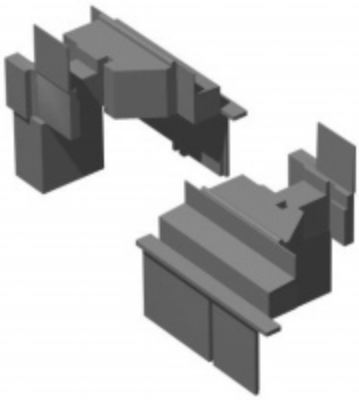

ΠΕΡΙΓΡΑΦΗ: *DESCRIPTION:*	ΤΑΠΑ ΔΙΦΥΛΛΟΥ M9665 *PLASTIC END CAP FOR M9665*
ΥΛΙΚΟ: *MATERIAL:*	ΠΟΛΥΑΜΙΔΙΟ 6.6 *POLYAMIDE 6.6*
ΧΡΩΜΑ: *COLOR:*	ΜΑΥΡΟ *BLACK*

11.90.05

ΠΕΡΙΓΡΑΦΗ: *DESCRIPTION:*	ΤΑΚΑΚΙ ΤΖΑΜΙΟΥ 5 ΧΙΛ. *PLASTIC GLAZING SPACER 5mm*
ΥΛΙΚΟ: *MATERIAL:*	ΠΟΛΥΑΜΙΔΙΟ 6.6 *POLYAMIDE 6.6*
ΧΡΩΜΑ: *COLOR:*	ΜΑΥΡΟ *BLACK*

(ZC.1801) ERT.500.401

ΠΕΡΙΓΡΑΦΗ: *DESCRIPTION:*	ΣΕΤ ΜΕΝΤΕΣΕ ΜΗΧΑΝΙΣΜΟΥ 70Kg. KIT PAIR OF HINGES TILT-N-TURN 70Kg.
ΥΛΙΚΟ: *MATERIAL:*	ΑΛΟΥΜΙΝΙΟ *ALUMINIUM*
ΧΡΩΜΑ: *COLOR:*	ΛΕΥΚΗ *WHITE*

11.20.**

11.20.13

11.20.23

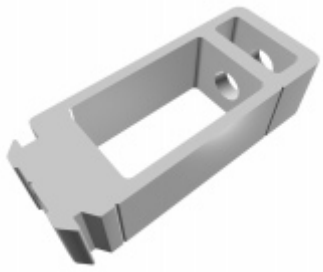

ΠΕΡΙΓΡΑΦΗ: *DESCRIPTION:*	ΣΥΝΔΕΣΜΟΣ ΓΙΑ "ΤΑΥ" ΕΣΩΤΕΡΙΚΟΣ ΘΑΛΑΜΟΣ *"T" CONNECTOR FOR INTERIOR CHAMBER*
ΥΛΙΚΟ: *MATERIAL:*	ΑΛΟΥΜΙΝΙΟ *EXTRUDED ALUMINIUM*
ΧΡΩΜΑ: *COLOR:*	ΑΒΑΦΟ *MILL FINISH*

ERT.500.113

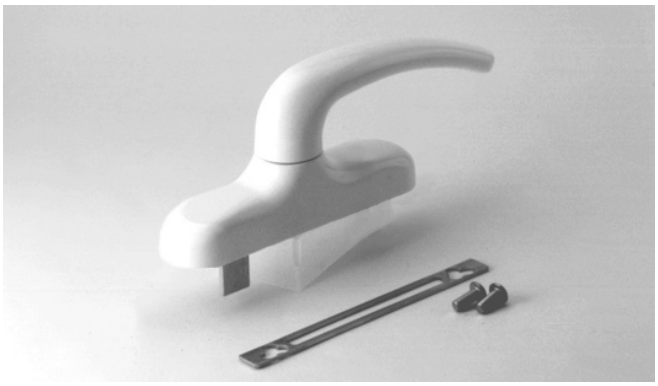

ΠΕΡΙΓΡΑΦΗ: *DESCRIPTION:*	ΣΠΑΝΙΟΛΕΤΑ ΑΝΟΙΓΟΜΕΝΟΥ "MAXIMA" HANDLE CASEMENT SINGLE ACTION "MAXIMA"
ΥΛΙΚΟ: *MATERIAL:*	ΑΛΟΥΜΙΝΙΟ *ALUMINIUM*
ΧΡΩΜΑ: *COLOR:*	ΛΕΥΚΗ *WHITE*

ERT.500.111

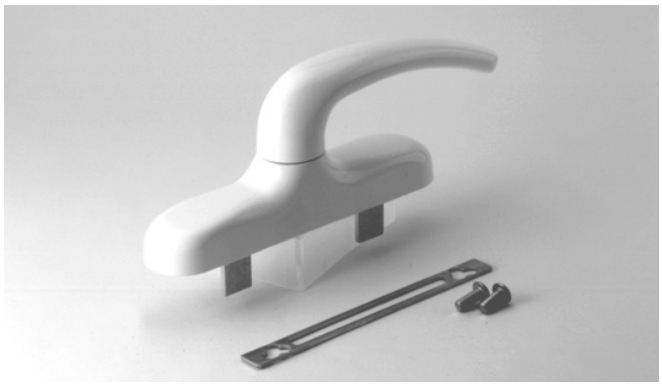

ΠΕΡΙΓΡΑΦΗ: *DESCRIPTION:*	ΣΠΑΝΙΟΛΕΤΑ ΜΗΧΑΝΙΣΜΟΥ "MAXIMA" HANDLE CASEMENT DOUBLE ACTION"MAXIMA"
ΥΛΙΚΟ: *MATERIAL:*	ΑΛΟΥΜΙΝΙΟ *ALUMINIUM*
ΧΡΩΜΑ: *COLOR:*	ΛΕΥΚΗ *WHITE*

MO.50.00

ΠΕΡΙΓΡΑΦΗ: *DESCRIPTION:*	ΜΕΝΤΕΣΕΣ ΔΙΠΛΟΣ ΕΛΛΗΝΙΚΟΣ DOUBLE HINGE SIMPLE
ΥΛΙΚΟ: *MATERIAL:*	ΑΛΟΥΜΙΝΙΟ *ALUMINIUM*
ΧΡΩΜΑ: *COLOR:*	ΛΕΥΚΗ-ΜΑΥΡΟ-ΚΑΦΕ *WHITE-BLACK- BROWN*

MO.54.00

ΠΕΡΙΓΡΑΦΗ: *DESCRIPTION:*	ΜΕΝΤΕΣΕΣ ΔΙΠΛΟΣ ΙΤΑΛΙΚΟΣ DOUBLE HINGE STANDARD
ΥΛΙΚΟ: *MATERIAL:*	ΑΛΟΥΜΙΝΙΟ *ALUMINIUM*
ΧΡΩΜΑ: *COLOR:*	ΛΕΥΚΗ-ΜΑΥΡΟ-ΚΑΦΕ *WHITE-BLACK- BROWN*

(ZC.1801) ERT.500.401

ΠΕΡΙΓΡΑΦΗ: *DESCRIPTION:*	ΣΕΤ ΜΕΝΤΕΣΕ ΜΗΧΑΝΙΣΜΟΥ 70Kg. KIT PAIR OF HINGES TILT-N-TURN 70Kg.
ΥΛΙΚΟ: *MATERIAL:*	ΑΛΟΥΜΙΝΙΟ *ALUMINIUM*
ΧΡΩΜΑ: *COLOR:*	ΛΕΥΚΗ *WHITE*

(ZC.1802) ERT.500.501

ΠΕΡΙΓΡΑΦΗ: *DESCRIPTION:*	ΣΕΤ ΜΕΝΤΕΣΕ ΜΗΧΑΝΙΣΜΟΥ 70-150 Kgr. KIT PAIR OF HINGES TILT-N-TURN 70-150Kg.
ΥΛΙΚΟ: *MATERIAL:*	ΑΛΟΥΜΙΝΙΟ *ALUMINIUM*
ΧΡΩΜΑ: *COLOR:*	ΛΕΥΚΗ *WHITE*

(ZC.1800) ERT.500.200

ΠΕΡΙΓΡΑΦΗ:	ΒΑΣΙΚΟ ΣΕΤ ΜΗΧΑΝΙΣΜΟΥ
DESCRIPTION:	KIT BASIC FITTING MECHANISM
ΥΛΙΚΟ:	ΑΛΟΥΜΙΝΙΟ
MATERIAL:	*ALUMINIUM*
ΧΡΩΜΑ:	ΑΒΑΦΟ
COLOR:	*MILL FINISH*

(ZC.1807) ERT.501.000

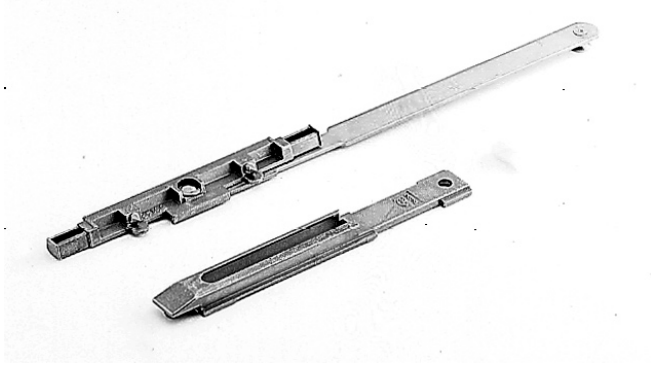

ΠΕΡΙΓΡΑΦΗ:	ΒΟΗΘΗΤΙΚΟ ΕΞΤΡΑ ΜΠΡΑΤΣΟ
DESCRIPTION:	ADDITIONAL SCISSOR ARM FOR LARGE SPANS
ΥΛΙΚΟ:	ΑΛΟΥΜΙΝΙΟ
MATERIAL:	*ALUMINIUM*
ΧΡΩΜΑ:	ΑΒΑΦΟ
COLOR:	*MILL FINISH*

(ZC.1804) ERT.501.100

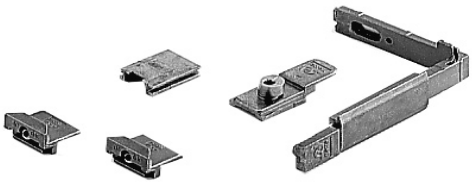

ΠΕΡΙΓΡΑΦΗ:	ΣΕΤ ΓΙΑ ΕΞΤΡΑ ΚΛΕΙΣΙΜΟ
DESCRIPTION:	ADDITIONAL LOCKSET
ΥΛΙΚΟ:	ΑΛΟΥΜΙΝΙΟ
MATERIAL:	*ALUMINIUM*
ΧΡΩΜΑ:	ΑΒΑΦΟ
COLOR:	*MILL FINISH*

(ZC.1806) ERT.500.302

ΠΕΡΙΓΡΑΦΗ:	ΜΠΡΑΤΣΟ No 2 600 χιλ.
DESCRIPTION:	SCISSOR ARM 600mm FOR TILT AND TURN
ΥΛΙΚΟ:	ΑΤΣΑΛΙ
MATERIAL:	*GALVANIZED STEEL*
ΧΡΩΜΑ:	ΑΒΑΦΟ
COLOR:	*MILL FINISH*

(ZC.1805) ERT.500.301

ΠΕΡΙΓΡΑΦΗ:	ΜΠΡΑΤΣΟ No 1 300 χιλ.
DESCRIPTION:	SCISSOR ARM 300mm FOR TILT AND TURN
ΥΛΙΚΟ:	ΑΤΣΑΛΙ
MATERIAL:	*GALVANIZED STEEL*
ΧΡΩΜΑ:	ΑΒΑΦΟ
COLOR:	*MILL FINISH*

(ZA.1791) ERT.505.101

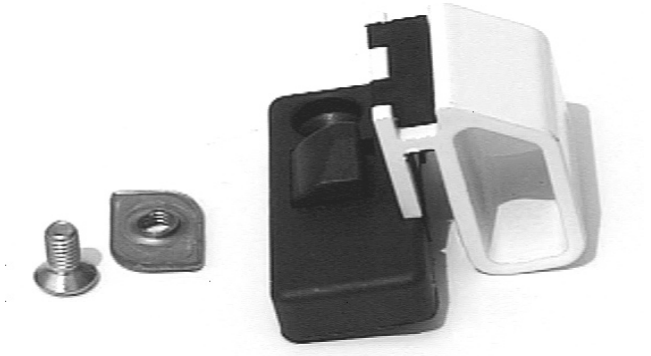

ΠΕΡΙΓΡΑΦΗ:	"ΑΕΡΟΠΛΑΝΑΚΙ"
DESCRIPTION:	ALUMINIUM LATCH FOR TRANSOM
ΥΛΙΚΟ:	ΑΛΟΥΜΙΝΙΟ
MATERIAL:	*ALUMINIUM*
ΧΡΩΜΑ:	ΛΕΦΚΗ-ΜΑΥΡΟ
COLOR:	*WHITE-BLACK*

MO.605056

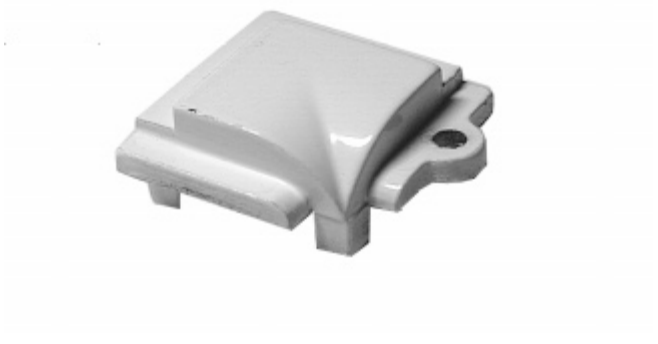

ΠΕΡΙΓΡΑΦΗ: *DESCRIPTION:*	ΓΩΝΙΑ ΚΑΜΠΙΛΩΤΟΥ ΚΟΥΜ/ΜΑΤΟΣ M11056 ALUMINIUM ANGLE FOR GLAZING BEAD M11056
ΥΛΙΚΟ: *MATERIAL:*	ΑΛΟΥΜΙΝΙΟ *ALUMINIUM*
ΧΡΩΜΑ: *COLOR:*	ΛΕΦΚΗ-ΜΑΥΡΟ *WHITE-BLACK*

MO.605055

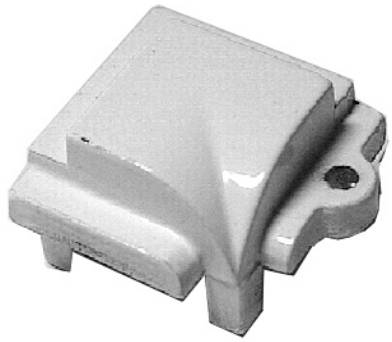

ΠΕΡΙΓΡΑΦΗ: *DESCRIPTION:*	ΓΩΝΙΑ ΚΑΜΠΙΛΩΤΟΥ ΚΟΥΜ/ΜΑΤΟΣ M11056 ALUMINIUM ANGLE FOR GLAZING BEAD M11056
ΥΛΙΚΟ: *MATERIAL:*	ΑΛΟΥΜΙΝΙΟ *ALUMINIUM*
ΧΡΩΜΑ: *COLOR:*	ΛΕΦΚΗ-ΜΑΥΡΟ *WHITE-BLACK*

401.26.00

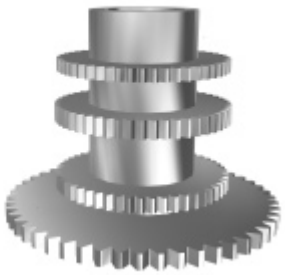

ΠΕΡΙΓΡΑΦΗ: *DESCRIPTION:*	ΞΥΛΟΥΡΙΣΤΙΚΟ ΕΥΘΥΓΡΑΜΜΩΝ ΔΙΑΤΟΜΩΝ ΤΑΥ MILLING BIT FOR STRAIGHT “T” PROFILES
ΥΛΙΚΟ: *MATERIAL:*	ΑΤΣΑΛΙ *STEEL*
ΧΡΩΜΑ: *COLOR:*	

BALC.14415

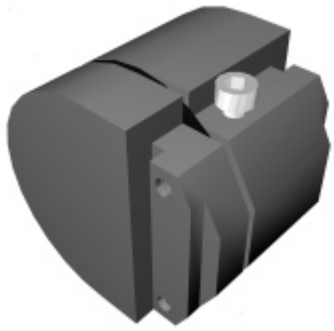

ΠΕΡΙΓΡΑΦΗ: *DESCRIPTION:*	ΜΥΛΟΣ ΠΕΡΙΣΤΡΕΦΟΜΕΝΟΥ MECHANISM FOR PIVOT WINDOW
ΥΛΙΚΟ: *MATERIAL:*	ΑΤΣΑΛΙ *STEEL*
ΧΡΩΜΑ: *COLOR:*	ΜΑΥΡΟ *BLACK*

401.26.01

ΠΕΡΙΓΡΑΦΗ: *DESCRIPTION:*	ΞΥΛΟΥΡΙΣΤΙΚΟ ΕΥΘΥΓΡΑΜΜΩΝ ΔΙΑΤΟΜΩΝ ΤΑΥ MILLING BIT FOR PROFILE M11362 , M11366
ΥΛΙΚΟ: *MATERIAL:*	ΑΤΣΑΛΙ *STEEL*
ΧΡΩΜΑ: *COLOR:*	

401.26.02

ΠΕΡΙΓΡΑΦΗ: *DESCRIPTION:*	ΞΥΛΟΥΡΙΣΤΙΚΟ ΕΥΘΥΓΡΑΜΜΩΝ ΔΙΑΤΟΜΩΝ ΤΑΥ MILLING BIT FOR PROFILE M11188 , M11078
ΥΛΙΚΟ: *MATERIAL:*	ΑΤΣΑΛΙ *STEEL*
ΧΡΩΜΑ: *COLOR:*	

MO.11058

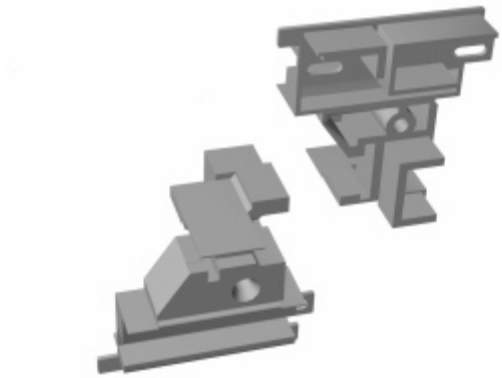

ΠΕΡΙΓΡΑΦΗ:	ΤΑΠΑ ΔΙΦΥΛΛΟΥ M11058
DESCRIPTION:	PLASTIC END CAP FOR M11058
ΥΛΙΚΟ:	ΠΟΛΥΑΜΙΔΙΟ 6.6
MATERIAL:	*POLYAMIDE 6.6*
ΧΡΩΜΑ:	ΜΑΥΡΟ
COLOR:	*BLACK*

MO.11258

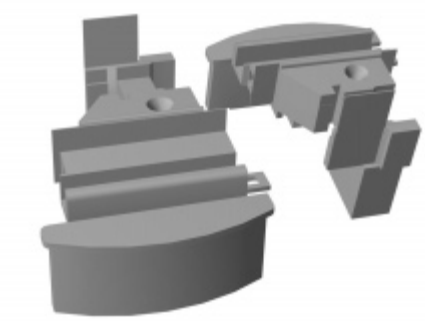

ΠΕΡΙΓΡΑΦΗ:	ΤΑΠΑ ΔΙΦΥΛΛΟΥ M11258
DESCRIPTION:	PLASTIC END CAP FOR M11258
ΥΛΙΚΟ:	ΠΟΛΥΑΜΙΔΙΟ 6.6
MATERIAL:	*POLYAMIDE 6.6*
ΧΡΩΜΑ:	ΜΑΥΡΟ
COLOR:	*BLACK*

SP.1

ΠΕΡΙΓΡΑΦΗ: ΛΑΣΤΙΧΟ ΣΦΗΝΑ 8,5 - 9 mm.
DESCRIPTION: GLAZING GASKET PRESS-IN

ΥΛΙΚΟ: EPDM
MATERIAL: *EPDM*

SP.2

ΠΕΡΙΓΡΑΦΗ: ΛΑΣΤΙΧΟ ΣΦΗΝΑ 8 mm.
DESCRIPTION: GLAZING GASKET PRESS-IN

ΥΛΙΚΟ: EPDM
MATERIAL: *EPDM*

SP.3

ΠΕΡΙΓΡΑΦΗ: ΛΑΣΤΙΧΟ ΣΦΗΝΑ 7,5 mm.
DESCRIPTION: GLAZING GASKET PRESS-IN

ΥΛΙΚΟ: EPDM
MATERIAL: *EPDM*

SP.4

ΠΕΡΙΓΡΑΦΗ: ΛΑΣΤΙΧΟ ΣΦΗΝΑ 7 mm.
DESCRIPTION: GLAZING GASKET PRESS-IN

ΥΛΙΚΟ: EPDM
MATERIAL: *EPDM*

SP.5

ΠΕΡΙΓΡΑΦΗ: ΛΑΣΤΙΧΟ ΣΦΗΝΑ 6 mm.
DESCRIPTION: GLAZING GASKET PRESS-IN

ΥΛΙΚΟ: EPDM
MATERIAL: *EPDM*

SP.6

ΠΕΡΙΓΡΑΦΗ: ΛΑΣΤΙΧΟ ΣΦΗΝΑ 5 mm.
DESCRIPTION: GLAZING GASKET PRESS-IN

ΥΛΙΚΟ: EPDM
MATERIAL: *EPDM*

SP.7

ΠΕΡΙΓΡΑΦΗ: ΛΑΣΤΙΧΟ ΣΦΗΝΑ 3 - 3,5 mm.
DESCRIPTION: GLAZING GASKET PRESS-IN

ΥΛΙΚΟ: EPDM
MATERIAL: *EPDM*

MO.11.11

ΠΕΡΙΓΡΑΦΗ: ΛΑΣΤΙΧΟ ΚΕΝΤΡΙΚΗΣ ΣΤΕΓΑΝΩΣΗΣ
DESCRIPTION: CENTRAL SEAL

ΥΛΙΚΟ: EPDM
MATERIAL: *EPDM*

MO.68

ΠΕΡΙΓΡΑΦΗ: ΛΑΣΤΙΧΟ ΤΖΑΜΙΟΥ 3 χιλ.
DESCRIPTION: GLAZING GASKET EXTERIOR
ΥΛΙΚΟ: EPDM
MATERIAL: *EPDM*

MO.69

ΠΕΡΙΓΡΑΦΗ: ΛΑΣΙΧΟ ΤΖΑΜΙΟΥ 5 χιλ.
DESCRIPTION: GLAZING GASKET PRESS-IN
ΥΛΙΚΟ: EPDM
MATERIAL: *EPDM*

152001

ΠΕΡΙΓΡΑΦΗ: ΛΑΣΤΙΧΟ ΝΥΧΑΚΙ
DESCRIPTION: GASKET EXTERIOR SEAL
ΥΛΙΚΟ: EPDM
MATERIAL: *EPDM*

MO.63

ΠΕΡΙΓΡΑΦΗ: ΛΑΣΤΙΧΟ ΝΥΧΑΚΙ
DESCRIPTION: GASKET INTERIOR SEAL
ΥΛΙΚΟ: EPDM
MATERIAL: *EPDM*

MO.11.54

ΠΕΡΙΓΡΑΦΗ: ΛΑΣΤΙΧΟ ΣΥΣΤΗΜΑΤΟΣ M11000
DESCRIPTION: THERMAL ISOLATION GASKET
ΥΛΙΚΟ: EPDM
MATERIAL: *EPDM*

11.55-12

ΠΕΡΙΓΡΑΦΗ: ΛΑΣΤΙΧΟ ΣΥΣΤΗΜΑΤΟΣ M11000
DESCRIPTION: EXTERIOR ISOLATION GASKET
ΥΛΙΚΟ: EPDM
MATERIAL: *EPDM*

11.55-20

ΠΕΡΙΓΡΑΦΗ: ΛΑΣΤΙΧΟ ΣΥΣΤΗΜΑΤΟΣ M11000
DESCRIPTION: EXTERIOR ISOLATION GASKET
ΥΛΙΚΟ: EPDM
MATERIAL: *EPDM*

11.55-28

ΠΕΡΙΓΡΑΦΗ: ΛΑΣΤΙΧΟ ΣΥΣΤΗΜΑΤΟΣ M11000
DESCRIPTION: EXTERIOR ISOLATION GASKET
ΥΛΙΚΟ: EPDM
MATERIAL: *EPDM*

159002

ΠΕΡΙΓΡΑΦΗ: ΛΑΣΤΙΧΟ ΓΙΑ ΕΙΣΟΔΟΣ
DESCRIPTION: GASKET SEAL FOR EXTERIOR DOORS

ΥΛΙΚΟ: EPDM
MATERIAL: *EPDM*

159003

ΠΕΡΙΓΡΑΦΗ: ΛΑΣΤΙΧΟ ΓΙΑ ΕΙΣΟΔΟΣ
DESCRIPTION: GASKET SEAL FOR EXTERIOR DOORS

ΥΛΙΚΟ: EPDM
MATERIAL: *EPDM*

159004

ΠΕΡΙΓΡΑΦΗ: ΛΑΣΤΙΧΟ ΓΙΑ ΕΙΣΟΔΟΣ
DESCRIPTION: GASKET SEAL FOR EXTERIOR DOORS

ΥΛΙΚΟ: EPDM
MATERIAL: *EPDM*

SYSTEM 11000

"ALUTHERM PLUS"

ALUMIL

SYSTEM 11000

"ALUTHERM PLUS"

General information

System overview and profiles statics

Profiles

Accessories

Drawings

Cutting analysis

Assembly drawings

SYSTEM 11000

"ALUTHERM PLUS"

General information.....I

System overview and profiles statics.II

Profiles.....III

Accessories.....IV

Drawings.....V

Cutting analysis.....VI

Assembly drawings.....VII

SYSTEM 11000

"ALUTHERM PLUS"

GENERAL INFORMATION

CERTIFICATE

The TÜV CERT Certification Body of Rheinisch-Westfälischer TÜV e.V.

hereby certifies in accordance with TÜV CERT procedure that

ALUMIL MILONAS S.A.
61 100 Kilkis , Industrial Area
Hellas

has established and applies a quality system for

Aluminium systems development, extrusion and electrostatic painting of aluminium

An audit was performed, Report No. **3.0.2-1353/2000**

Proof has been furnished that the requirements according to

ISO 9001 : 1994 / EN ISO 9001 : 1994

are fulfilled. The certificate is valid until **August 2003**

Certificate Registration No. **04100 0980**

TGA-ZM-30-96-00

Essen, 07.08.2000

TÜV CERT Certification Body
of Rheinisch-Westfälischer TÜV e.V.

Alumil world

ALUMIL GREECE

	ADDRESS,E-MAIL	TELEPHONE	TELEFAX
FACTORY 61100 KILKIS	IDUSTRIAL AREA KILKIS alumil@the forthnet.gr	++30.341/71981 ++30.341/71989	++30.341/71988
HEAD OFFICE 54629 THESSALONIKI	"EGNATIA"BUILDING 1 ,DEMOCRACY sqr. www.alumil.gr	++30.31/555405-7 ++30.31/555423-4	++30.31/555425

ALUMIL ROM-INDUSTRY S.R.L.

HEADQUARTERS: BUCURESTI	CALEA RAHOVEI No 286A,SECTOR 5,COD76402 office@alumil.ro	0040-1-410.10.11 0040-1-410.10.12	0040-1-410.10.87
BRANCH: SLATINA	STR.CIREASOV No 7, COD 0500, JUD.OLT	0040-49-411.370 0040-49-430.396	0040-49-430.396
CONSTANTA	STR.INTERIOARA No 3, COD 8700	0040-41-619.039 0040-41-619.038	0040-41-619.038
TIMISOARA	STR.BUZIASULUI No 18, COD 1900	0040-56-291.750 0040-56-291.749	0040-56-291.749
CLIJ	STR.FABRICII No 91-103,COD 3400	0040-64-154.488	004-064-154.488
BRASOV	STR.BASALTULUI No11, COD 2200	0040-68-474.201	0040-68-474.201
BACAU	CALEA REPUBLICII No207, COD 5500	0040-34-183.590 0040-34-183.950	0040-34-183.950
GALATI	STR.LOSOVENI No115, COD 6200		

ALUMIL EXTRUSION S.R.L.

HEADQUARTERS	FILIPESTII DE PADURE, STR. GARII, BL.27B , APT.7, JUD. PRAHOVA		

ALUMIL BULGARIA LTD

HEADQUARTERS SOFIA	5, ILIA BESHKOV STR. CODE 1528 alumil@mbox.infotel.bg	003592-9788355 003592-9788358	003592-9788355 003592-9788358

ALUMIL POLSKA SP.Z.O.O.

TORUN	UI.MARII SKLODOWSKIEJ CURIE65 ,CODE87-100 alumil@ikp.atm.com.pl www.atm.com.pl/~alumil	056-6458801	056-6458800

ALUMIL CZ

PRAHA	POVLTAVSKA-TROJA,17100-PRAHA 7 alumilcz@mbox.vol.cz	+420(2)9005153 +4209(602)250521	420(2)83850218 420(2)8543924

Alumil world

ALUMIL SPAIN

	ADDRESS,E-MAIL	TELEPHONE	TELEFAX
EXPOSICION BARCELONA	DIAGONAL, 384-08037 ALMAGEN:Ctra.Sta.Creu de Calafell,a 50m del km.4 Gleva de la Casa-Gava(Barcelona)	934-588-191 936-627-302	934-589-005 936-627-302

ALUMIL DEUTSCHLAND GmbH

REINHEIM	WINGERTSTRASSE 21,D-643 54, REINHEIM ibalsys@aol.com www.alumil.de	(+49)06162-84207	(+49)06162-84215

ALUMIL SLOVAKIA

92101 PIESTANY	AREAL FIRMY ONSA,VRBOVSKA 39	+42(01)8387626332	

ALUMIL BENELUX OFFICE

BRÜSSELS OFFICE	20,Avenue des Arts ,B-1000 Brüssels alumil.benelux@skypro.be	+32.2.2820385	+32.2.2304908

FRANCE

59500 DOUAI	4325 ROUTE DE TOURNAI winco alumil@wanadoo.fr	0033/327964343	0033/327980212

“ALUMIL YU”Cacak

32000 CACAK	BULEVAR OSLOBODJENJA 17 ALUMILYU@EUNET.YU	**381(0)32225089 **381(0)3244833	**381(0)32225089 **381(0)3244833

ALUMIL ALBANIA

TIRANA	Rr.”SIRI KODRA“(ish O.M.T)	003554265167	003554265167

ALUMIL UK,LTD

LONDON	43,Greystoke Court,London W5 1EN kastellis@alumil.co.uk www.alumil.co.uk	+44 20 8998 0192 07765252136	+44 20 8998 3637

ALUMIL UKRAINE,LTD

KIEV	ul.Severo-syretcka 3,zavod”Kvazar”-Kiev alumil@carrier.kiev.ua	(0038044)295 555 (0038044)294 95	(0038044) 213 46

Prüfbericht

Nr. 105 21666

Fenster
Türen
Fassaden
Werkstoffe
Zubehör

ift ROSENHEIM

Auftraggeber

ALUMIL-MILONAS s.a.
Industrial Area Kilkis
GR-61100 Kilkis
GREECE

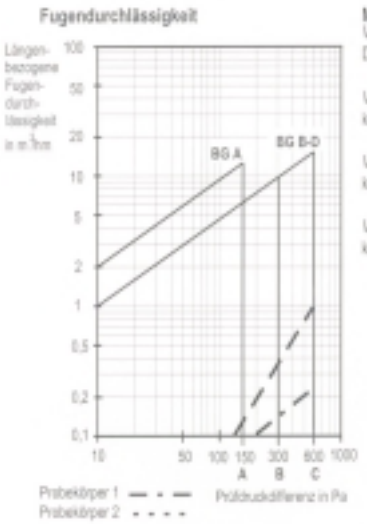

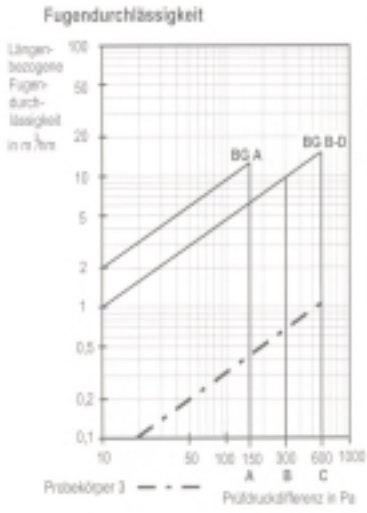

Klassifizierung / Einstufung

Aufgrund der Ergebnisse der Schlußüberprüfung erfolgte für das Fenstersystem

„M 11000“ die **Einstufung nach DIN 18055:**

einflügelige Fenster und Fenstertüren in Dreh- und Drehkippausführung in

Beanspruchungsgruppe C

zweiflügelige Fenster und Fenstertüren mit aufgehendem Mittelstück in

Beanspruchungsgruppe C

i.f.t. Rosenheim
6. Oktober 1999

Institutsleiter
Professor Josef Schmid

Bereich Bauteilprüfung
Florian Sewald

1.0 The following examples are for calculating the required Moment of Inertia (Ix)

1.1 Tilt - Turn window next to fixed window with wind pressure of 0,5kN/m²

Calculate the profile between the two elements

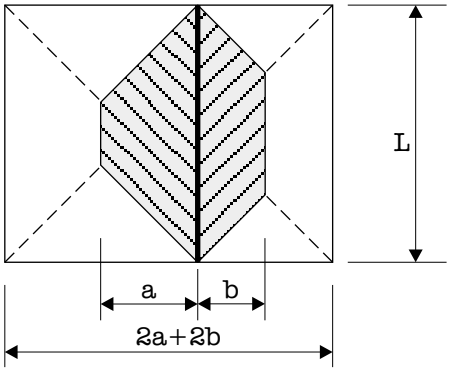

L = L1 = 150cm
a = 50cm
b = 30cm
f ≦ L / 300
f_1 ≦ 8mm

*From Table 3.1& 3.2 with wind pressure 1kN/m²
Ix for effective area=(a)*(L)= 50cm x 150cm= 7,8cm⁴
+Ix for effective area=(b)*(L)= 30cm x 150cm= 5,3cm⁴
Ix = 13,1cm⁴

*From Table 4.1 with wind pressure 0,5kN/m²
I_x = 13,1 x 0,5 = 6,55cm⁴
*From Table 1.1 choose the appropriate profile with Ix value greater than or equal to 6,55cm⁴

1.2 Opening door next to fixed window with wind pressure of 0,5kN/m²

Calculate the profile between the two elements

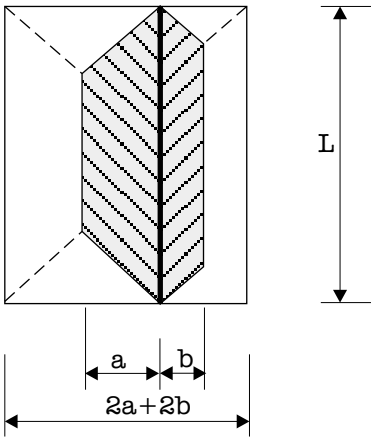

L = L1 = 220cm
a = 50cm
b = 20cm
f ≦ L / 300
f_1 ≦ 8mm

*From Table 3.1& 3.2 with wind pressure 1kN/m²
Ix for effective area 50cm x 220cm= 27,3cm⁴
+Ix for effective area 20cm x 220cm= 11,7cm⁴
Ix = 39,0cm⁴

*From Table 4.1 with wind pressure 0,5kN/m²
Ix = 39,0 x 0,5 = 19,5cm⁴
*From Table 1.1 choose the appropriate profiles with Ix value greater than or equal to 19,5cm⁴

1.3 Opening door with transom-window with wind pressure of 0,5Kn/m2

Calculate the profile between the two elements

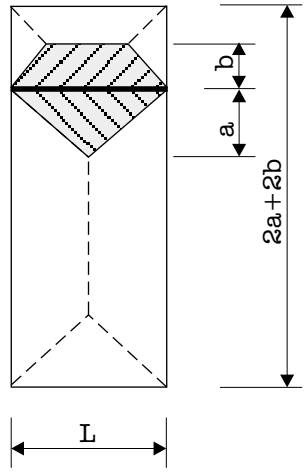

L = L1 = 100cm
a = L/2 = 50cm
b = 20cm
f ≦ L / 300
f_1 ≦ 8mm

*From Table 3.1& 3.2 with wind pressure 1kN/m^2
Ix for effective area 50cm x 100cm= 1,8 cm^4
+ Ix for effective area 20cm x 100cm= 1,0 cm^4
Ix = 2,8 cm^4

*From Table 4.1 with wind pressure 0,5kN/m^2
Ix = 2,8 x 0,5 = 1,4cm^4
*From Table 1.1 choose the appropriate profiles with Ix value greater than or equal to 1,4cm^4

1.4 Opening door next to fixed window with wind pressure of 0,5 kN/m^2

Calculate the profile between the two elements

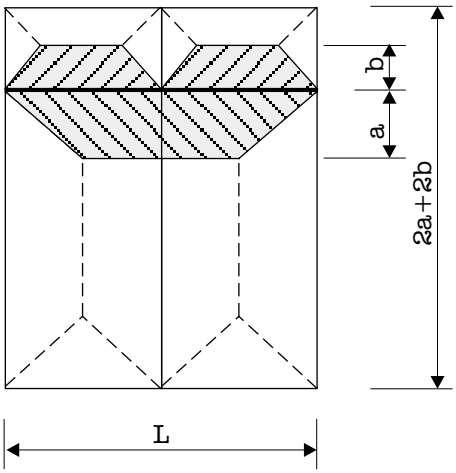

L = L1 = 200cm
a = L/4 = 50cm
b = 20cm
f ≦ L / 300
f_1 ≦ 8mm

*From Table 3.1& 3.2 with wind pressure 1kN/m^2
Ix for effective area 50cm x 200cm= 20,1cm^4
+ Ix for effective area 20cm x 200cm= 8,8cm^4
Ix = 28,9cm^4

*From Table 4.1 with wind pressure 0,5kN/m^2
Ix = 28,9 x 0,5 = 14,4 cm^4

*From Table 1.1 choose the appropriate profiles with Ix value greater than or equal to 14,4 cm^4

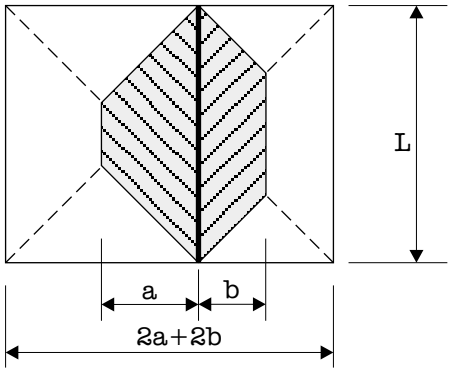

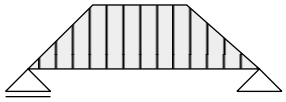

Moment of Inertia for Trapezoidal Load

L = effective height in cm

a = effective width in cm

b = effective width in cm

$f \leqq L / 300$

$f_1 \leqq 8mm$

Table 4.1 Wind Pressure Factor

Building height (m)	Wind Pressure (kN/m^2)
0 - 8	0.5
8 - 20	0.8
20 - 100	1.1

Wind Pressure	Tabel 3.1 Aluminum ($E = 7 \cdot 10^5$ kp/cm^2)								
1,0kN/m2	Moments of Inertia Ja or Jb (cm^4)								
	Effective Width (a or b)								
	20	30	40	50	60	70	80	90	100
100	1,0	1,4	1,7	1,8	1,7	1,4	1,1	0,6	0,2
110	1,4	2,0	2,4	2,6	2,6	2,4	2,0	1,4	0,9
120	1,8	2,6	3,2	3,6	3,7	3,6	3,2	2,6	1,9
130	2,4	3,4	4,2	4,8	5,1	5,1	4,8	4,2	3,4
140	3,0	4,3	5,3	6,2	6,7	6,9	6,7	6,2	5,4
150	3,7	5,3	6,7	7,8	8,6	9,0	9,0	8,6	7,8
160	4,5	6,5	8,2	9,7	10,8	11,5	11,7	11,5	10,8
170	5,4	7,8	10,0	11,9	13,3	14,3	14,8	14,8	14,3
180	6,4	9,3	12,0	14,3	16,2	17,6	18,4	18,7	18,4
190	7,5	11,0	14,2	17,1	19,4	21,3	22,5	23,2	23,2
200	8,8	12,9	16,7	20,1	23,0	25,4	27,1	28,2	28,5
210	10,2	15,0	19,5	23,5	27,1	30,0	32,3	33,8	34,6
220	11,7	17,3	22,5	27,3	31,5	35,1	38,0	40,1	41,4
230	13,4	19,8	25,8	31,4	36,4	40,7	44,3	47,0	48,9
240	15,2	22,5	29,5	35,9	41,7	46,9	51,2	54,6	57,1
250	17,2	25,5	33,4	40,8	47,6	53,6	58,7	63,0	66,2
260	19,4	28,8	37,7	46,1	53,9	60,9	67,0	72,1	76,2
270	21,8	32,3	42,4	51,9	60,7	68,8	75,9	82,0	87,0
280	24,3	36,0	47,4	58,1	68,1	77,3	85,5	92,7	98,7
290	27,0	40,1	52,7	64,8	76,1	86,5	95,9	104,2	111,3
300	29,9	44,4	58,5	72,0	84,6	96,4	107,1	116,7	125,0
310	33,0	49,1	64,7	79,6	93,8	107,0	119,1	130,0	139,6
320	36,3	54,0	71,3	87,8	103,5	118,3	131,9	144,3	155,3
330	39,8	59,3	78,3	96,5	113,9	130,3	145,6	159,5	172,0
340	43,6	64,9	85,7	105,8	125,0	143,2	160,1	175,7	189,8
350	47,6	70,9	93,6	115,6	136,8	156,8	175,6	193,0	208,8
360	51,8	77,2	102,0	126,1	149,2	171,2	192,0	211,3	229,0
370	56,2	83,8	110,9	137,1	162,4	186,5	209,3	230,7	250,4
380	60,9	90,9	120,2	148,7	176,3	202,7	227,7	251,2	273,0
390	65,9	98,3	130,1	161,0	191,0	219,7	247,1	272,8	296,8
400	71,1	106,1	140,4	174,0	206,4	237,7	267,5	295,6	322,0
450	101,3	151,3	200,6	249,0	296,2	342,0	386,1	428,4	468,7
500	139,0	207,9	275,9	342,9	408,5	472,6	534,9	595,1	653,0
550	185,1	276,9	367,9	457,7	546,0	632,6	717,1	799,4	879,1
600	240,4	359,8	478,3	595,4	711,0	824,7	936,2	1045,1	1151,3

Effective Height L (cm)

Table 5.1 Correction Factor for Ix (cm^4) with glazing lengths L_1>240cm $f_1 \leqq 8mm$	
Glazing lenght (cm)	L- Factor
250	1.04
260	1.08
270	1.12
280	1.17
290	1.21
300	1.25
325	1.35
350	1.46
375	1.56
400	1.67

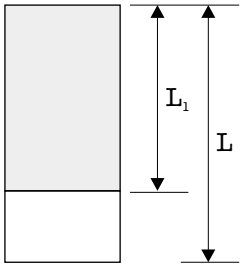

Table 6.1 Correction Factor for Ix (cm^4) when L_1 < L, $f_1 \leqq 8mm$			
L (cm)	L_1 / L		
	0.75	0.66	0.50
400	1.00	1.00	1.00
450	1.05	1.00	1.00
500	1.17	1.00	1.00
550	1.28	1.01	1.00
600	1.40	1.11	1.00

Wind Pressure	Tabel 3.2 Aluminum (E= 7 · 10^5 kp/cm^2)								
1,0kN/m2	The sum of Moments of Inertia Ja + Jb (cm^4)								
	Effective Width (a or b)								
	110	120	130	140	150	160	170	180	190
100									
110									
120	1,1								
130	2,5	1,5	0,6						
140	4,3	3,1	1,9	0,9					
150	6,7	5,4	3,9	2,4	1,1	0,2			
160	9,7	8,3	6,6	4,8	3,0	1,5	0,4		
170	13,3	11,9	10,1	8,0	5,8	3,7	1,9	0,5	
180	17,6	16,2	14,4	12,1	9,6	7,0	4,5	2,3	0,7
190	22,5	21,3	19,4	17,1	14,4	11,5	8,4	5,5	2,9
200	28,2	27,1	25,4	23,1	20,2	17,0	13,5	9,9	6,5
210	34,6	33,8	32,3	30,0	27,1	23,7	19,9	15,8	11,7
220	41,8	41,4	40,1	38,0	35,1	31,6	27,5	23,1	18,3
230	49,8	49,8	48,9	47,0	44,3	40,8	36,5	31,8	26,6
240	58,7	59,2	58,7	57,1	54,6	51,2	46,9	42,0	36,4
250	68,4	69,5	69,5	68,4	66,2	63,0	58,8	53,7	47,9
260	79,1	80,9	81,5	80,9	79,1	76,2	72,1	67,1	61,1
270	90,8	93,4	94,6	94,6	93,4	90,8	87,0	82,0	76,0
280	103,4	106,9	109,0	109,7	109,0	106,9	103,4	98,7	92,8
290	117,1	121,5	124,5	126,0	126,0	124,5	121,5	117,1	111,4
300	131,9	137,3	141,3	143,7	144,5	143,7	141,3	137,4	131,9
310	147,7	154,4	159,4	162,8	164,5	164,5	162,8	159,4	154,4
320	164,8	172,7	178,9	183,4	186,2	187,1	186,2	183,4	178,9
330	182,9	192,2	199,8	205,5	209,4	211,3	211,3	209,4	205,5
340	202,4	213,1	222,1	229,2	234,3	237,4	238,4	237,4	234,3
350	223,0	235,4	245,9	254,5	260,9	265,3	267,4	267,4	265,3
360	245,0	259,1	271,3	281,4	289,3	295,0	298,5	299,6	298,5
370	268,3	284,2	298,2	310,0	319,5	326,8	331,6	334,0	334,0
380	292,9	310,9	326,7	340,3	351,6	360,5	366,9	370,7	372,0
390	318,9	339,0	356,9	372,4	385,6	396,2	404,3	409,7	412,4
400	346,4	368,7	388,8	406,4	421,6	434,1	443,9	451,0	455,3
450	506,7	542,2	575,2	605,4	632,6	656,7	677,7	695,3	709,6
500	708,3	761,0	810,6	857,1	900,2	939,8	975,7	1007,8	1035,8

Effective Height L (cm)

Table 7.1 Diagram for maximum casement size for series M11000

Diagram based on load diagram for tilt-tirn window with mechanism 350.50401 (max weight 70Kg). Maximum weight of casement with glazing not to exceed 30kg/m2.

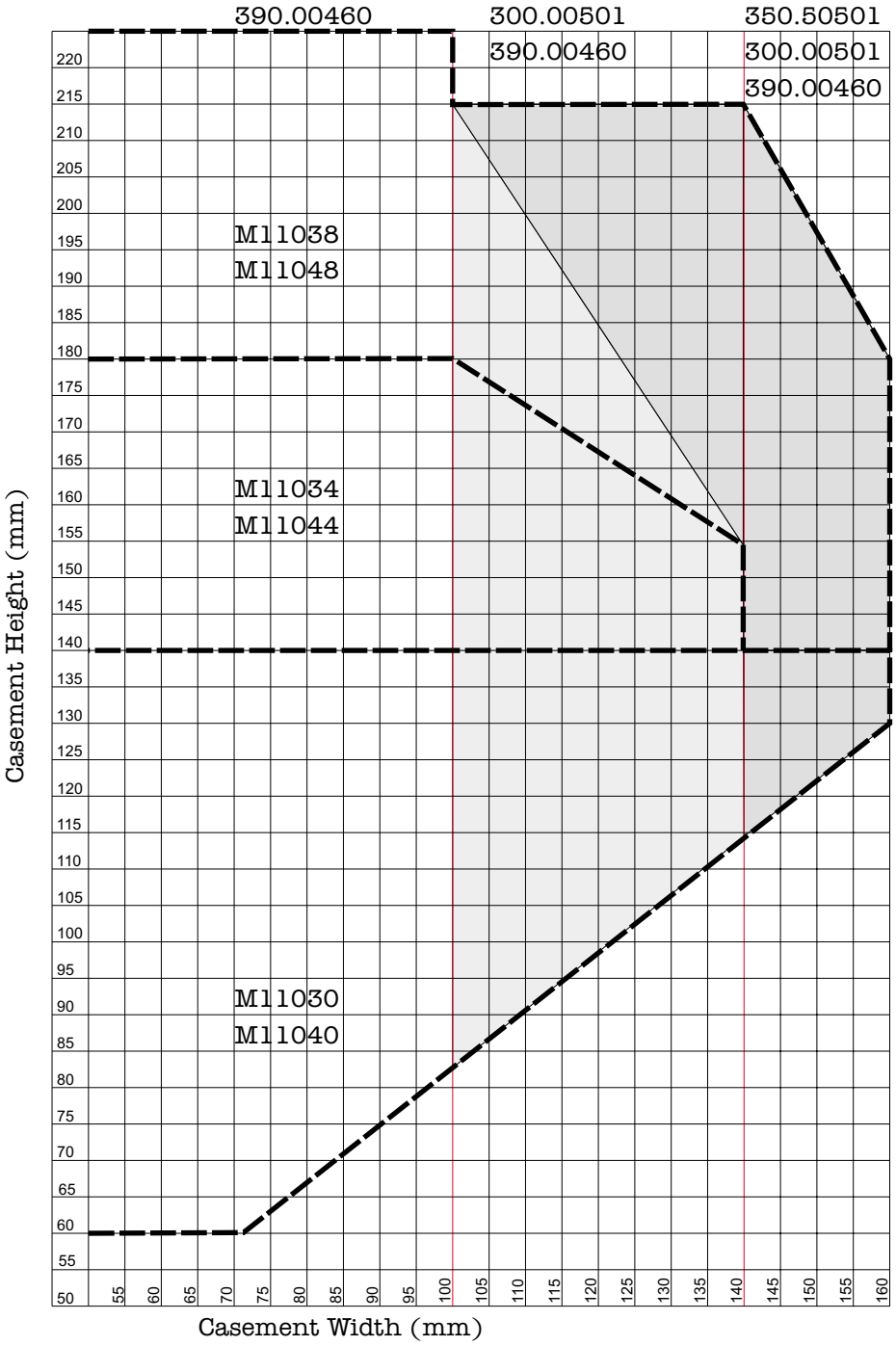

The width of the casement should never be more than 1.2 times the heigth of the casement.

The maximum window size 2,80m2

The maximum window width 160cm

The maximum door size 2,20m2

Load Diagram for tilt-turn window with mechanism 350.50101 (max weight 70Kg)

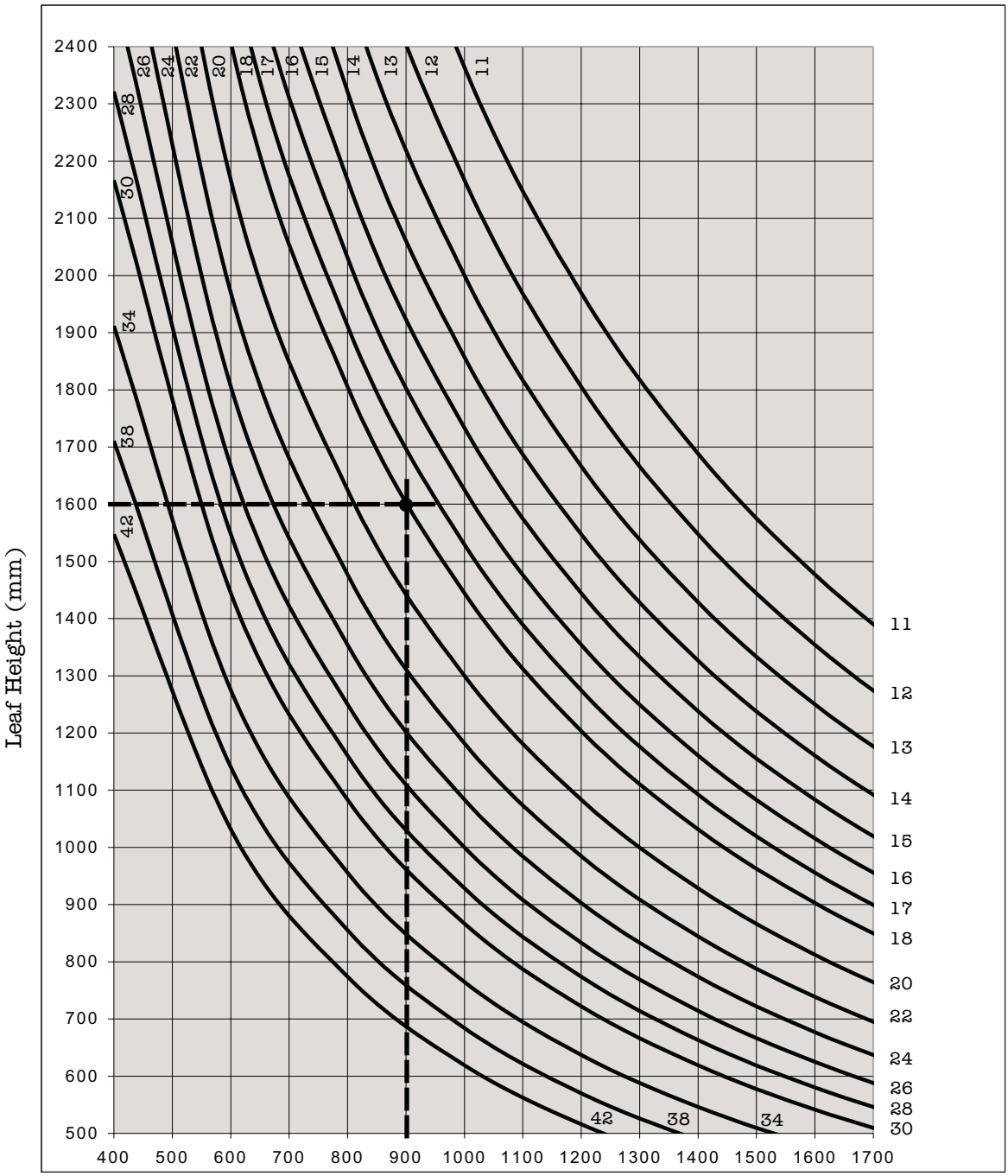

glazing depth (mm)	42	38	34	30	28	26	24	22	20	18	17	16	15	14	13	12	11
weight (Kg/m2)	105	95	85	75	70	65	60	55	50	45	42.5	40	37.5	35	32.5	30	27.5

* Glazing depth refers to the thickness of the glass pane(s), air space not included. In the example shown for a leaf with a width of 900mm and height of 1600mm a maximum glass thickness of 18mm(45Kg/m2) can be used to insure that the total weight of the leaf does not exceed 70Kg. A factor has been included for the total weight of the aluminum sash profiles not to exceed 5Kg. If the profiles exceed 5Kg a smaller glass thickness or smaller leaf size should be considered.

Load Diagram for tilt-turn window with mechanism 350.50501 (max weight 150Kg)

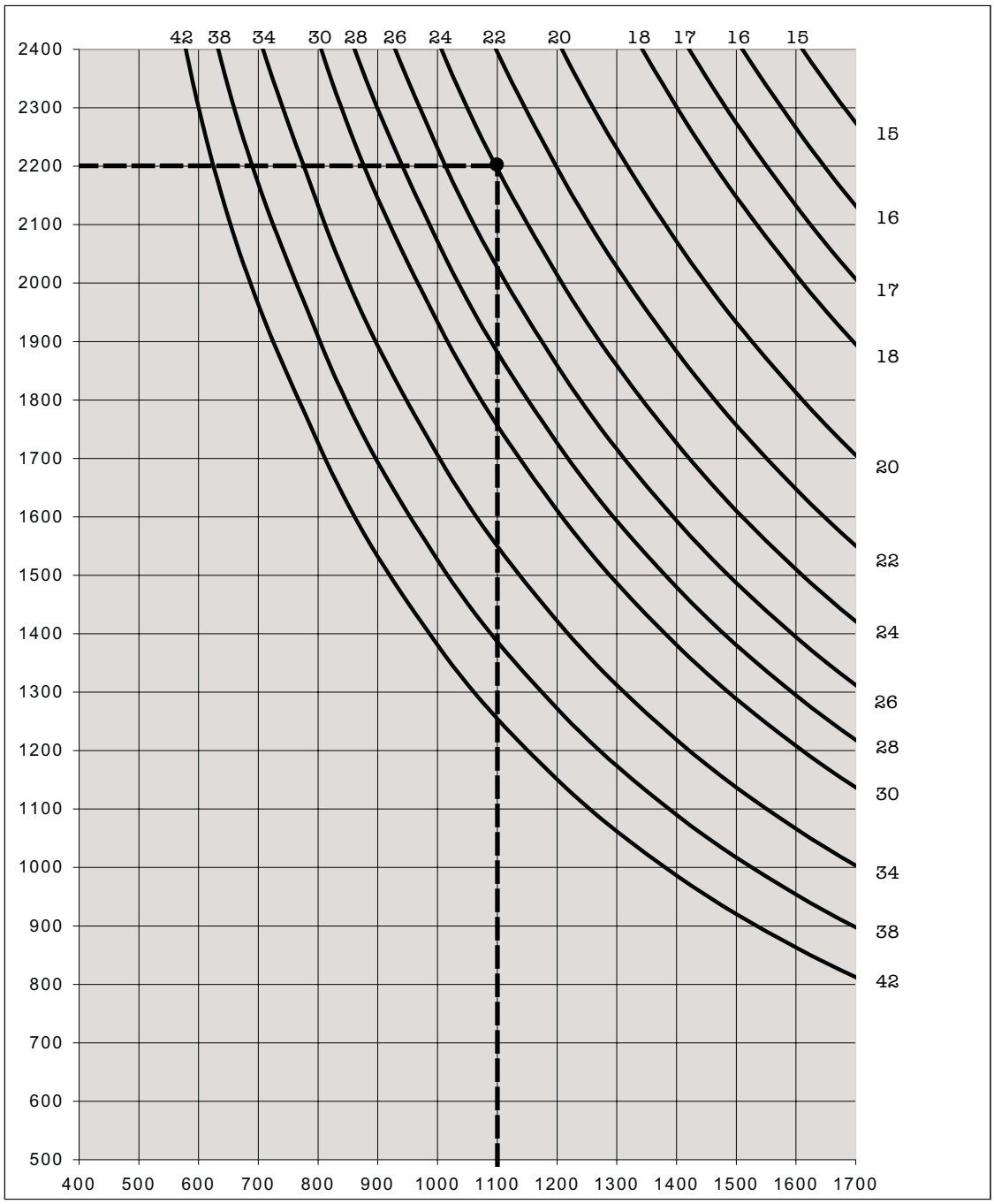

glazing depth (mm)	42	38	34	30	28	26	24	22	20	18	17	16	15	14	13	12	11
weight (Kg/m2)	105	95	85	75	70	65	60	55	50	45	42.5	40	37.5	35	32.5	30	27.5

* Glazing depth refers to the thickness of the glass pane(s), air space not included. In the example shown for a leaf with a width of 1100mm and height of 2200mm a maximum glass thickness of 24mm(60Kg/m2) can be used to insure that the total weight of the leaf does not exceed 150Kg. A factor has been included for the total weight of the aluminum sash profiles not to exceed 5Kg. If the profiles exceed 5Kg a smaller glass thickness or smaller leaf size should be considered.

SYSTEM 11000

"ALUTHERM PLUS"

SYSTEM OVERVIEW & PROFILE STATICS

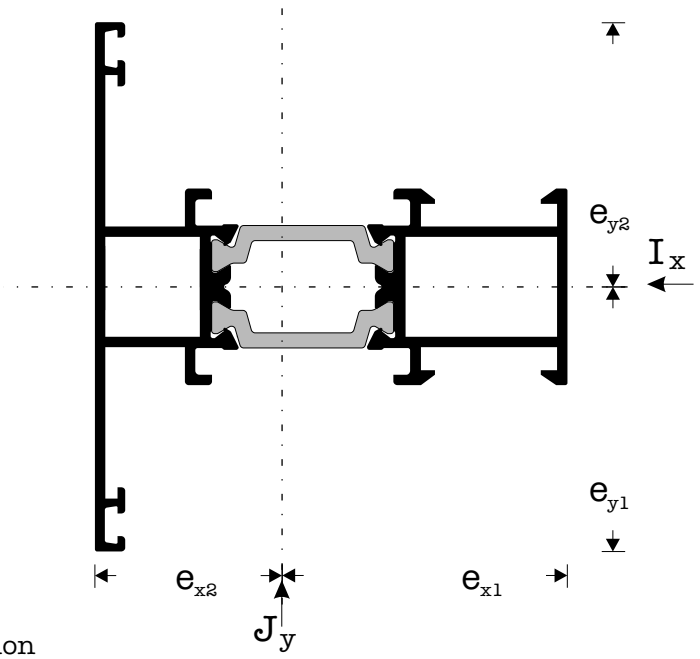

Table 1.1 Statistical Information

	Moment of Inertia about Neutral Axis	Moment of Resistance	Distance from Centroid	Distance from Centroid	Moment of Inertia about Neutral Axis	Moment of Resistance	Distance from Centroid	Distance from Centroid	Area	Perimeter
Profile	I_X	W_X	e_{Y1}	e_{X2}	J_Y	W_Y	e_{X1}	e_{Y2}	A	P
	(cm^4)	(cm^3)	(cm)	(cm)	(cm^4)	(cm^3)	(cm)	(cm)	(cm^2)	(cm)
M11008	4,91	1,40	1,49	2,76	18,37	5,55	3,50	3,31	4,96	34,4
M11010	10,17	2,92	2,00	2,77	21,58	5,68	3,48	3,80	5,58	36,4
M11014	18,22	5,27	2,51	2,79	24,75	5,77	3,46	4,29	6,18	38,4
M11016	13,35	3,35	2,11	3,75	34,45	9,34	3,99	3,69	6,23	42,7
M11018	22,18	5,75	2,62	3,78	39,10	9,36	3,97	4,18	6,83	44,7
M11020	14,17	3,51	2,15	3,70	35,54	9,74	4,04	3,65	6,31	43,5
M11026	7,00	1,74	1,59	3,71	29,76	9,27	4,03	3,21	5,61	40,7
M11028	23,56	6,32	2,67	3,73	40,02	9,71	4,01	4,12	6,78	44,6
M11030	7,43	2,12	3,30	3,51	27,58	8,36	3,49	3,30	5,89	40,5
M11034	14,12	4,01	3,78	3,48	31,60	8,27	3,52	3,82	6,52	42,5
M11038	38,25	10,60	4,79	3,39	40,55	8,43	3,61	4,81	7,99	46,5
M11040	8,48	2,40	3,36	3,47	27,66	8,23	3,53	3,24	6,02	41,9
M11044	15,54	4,37	3,84	3,44	31,64	8,24	3,56	3,76	6,60	43,9
M11048	40,54	11,11	4,85	3,35	40,64	8,38	3,65	4,75	8,08	47,9
M11050	14,14	2,96	3,79	4,78	36,18	9,50	3,71	3,81	6,86	47,0
M11058	9,36	2,43	2,82	2,73	20,85	5,60	3,85	3,72	5,70	44,0
M11062	7,72	2,10	3,50	2,58	20,70	5,91	3,67	3,50	5,30	39,7
M11064	14,03	3,87	4,00	2,62	23,95	5,99	3,63	4,00	5,92	41,8
M11066	23,31	6,46	4,50	2,64	27,16	6,04	3,61	4,50	6,52	43,8
M11068	430,10	45,56	7,50	2,72	47,47	6,33	3,53	7,50	10,56	55,8
M11070	160,81	125,76	10,0	2,83	71,29	7,13	3,42	10,00	14,85	65,8
M11074	37,53	6,13	4,50	6,12	92,90	20,64	5,13	4,50	8,72	53,7
M11076	7,70	1,28	1,33	6,03	71,47	22,47	5,22	3,18	6,78	45,6
M11078	47,81	6,72	4,50	7,11	125,99	28,00	5,64	4,50	9,65	55,4

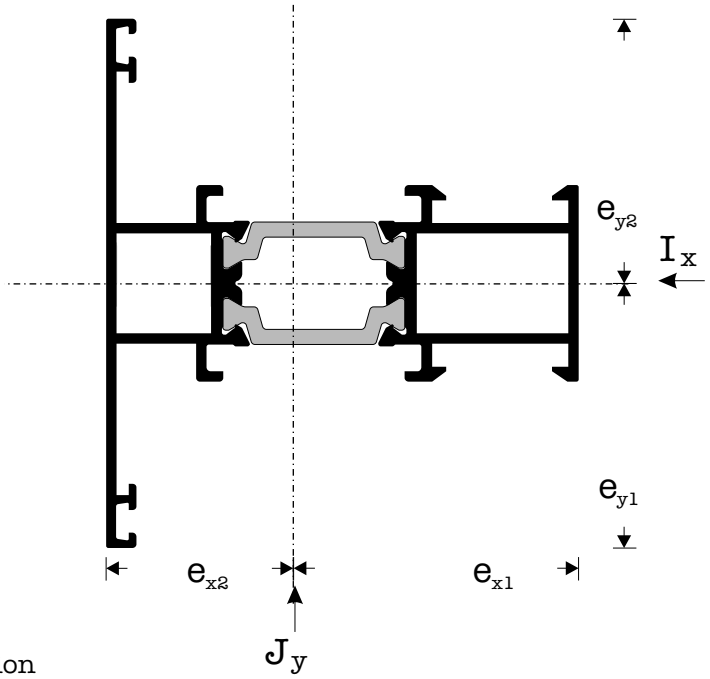

Table 1.1 Statistical Information

Profile	Moment of Inertia about Neutral Axis I_X	Moment of Resistance W_X	Distance from Centroid e_{Y1}	Distance from Centroid e_{X2}	Moment of Inertia about Neutral Axis J_Y	Moment of Resistance W_Y	Distance from Centroid e_{X1}	Distance from Centroid e_{Y2}	Area A	Perimeter P
	(cm^4)	(cm^3)	(cm)	(cm)	(cm^4)	(cm^3)	(cm)	(cm)	(cm^2)	(cm)
M11080	16,72	2,07	1,64	8,07	158,92	56,56	6,67	2,81	7,94	53,0
M11082	34,66	9,71	4,30	3,57	32,57	4,21	2,68	4,74	7,33	38,8
M11084	34,85	9,08	4,30	2,41	30,50	6,43	3,84	4,74	7,39	38,8
M11086	25,90	7,00	2,97	2,55	27,39	7,15	3,70	3,83	6,80	33,4
M11088	25,48	7,45	2,97	2,83	28,65	7,48	3,42	3,83	6,70	33,7
M11090	23,72	7,60	4,45	2,11	12,50	2,81	3,12	4,45	5,64	29,3
M11092	5,01	1,56	2,63	3,18	12,70	4,83	3,21	2,63	4,34	23,2
M11094	9,16	2,37	3,17	3,87	24,18	7,63	3,81	3,17	4,89	27,2
M11096	45,91	9,02	5,50	5,09	43,90	7,98	4,16	5,50	6,66	36,3
M11113	2,04	1,21	2,25	1,05	1,66	0,74	1,69	2,25	2,20	21,1
M11114	0,15	0,05	1,13	2,75	4,05	3,58	2,75	0,27	1,06	16,3
M11115	0,04	0,02	0,37	2,17	2,02	4,70	2,17	0,43	1,25	15,3
M11116	0,28	0,32	0,99	0,74	0,15	0,14	0,88	1,08	0,67	9,3
M11118	2,79	1,19	2,41	2,34	0,82	0,34	0,97	1,87	1,20	18,5
M11119	3,28	1,29	2,33	2,54	1,11	0,48	1,28	1,96	1,40	19,6
M11120	1,07	0,38	1,93	2,82	3,39	1,76	1,83	0,73	1,58	24,1
M11121	1,07	0,36	1,91	2,97	3,28	1,72	1,68	0,75	1,55	23,7
M11130	15,48	3,97	3,84	3,10	31,11	8,10	3,90	3,76	6,71	43,9
M11134	40,24	10,01	4,45	3,73	47,09	10,26	4,02	4,59	8,02	47,3
M11138	47,56	10,81	4,29	3,34	47,15	9,93	4,40	4,75	8,46	45,8
M11142	156,44	46,15	6,86	2,87	55,23	7,53	3,39	7,34	11,24	52,7
M11144	26,80	7,91	3,00	2,86	26,58	5,70	3,39	4,66	6,65	36,1
M11148	23,75	5,81	4,56	2,91	34,54	7,57	4,09	4,45	6,96	46,3
M11149	21,81	2,14	2,20	10,17	324,63	90,18	7,83	3,60	10,14	64,8

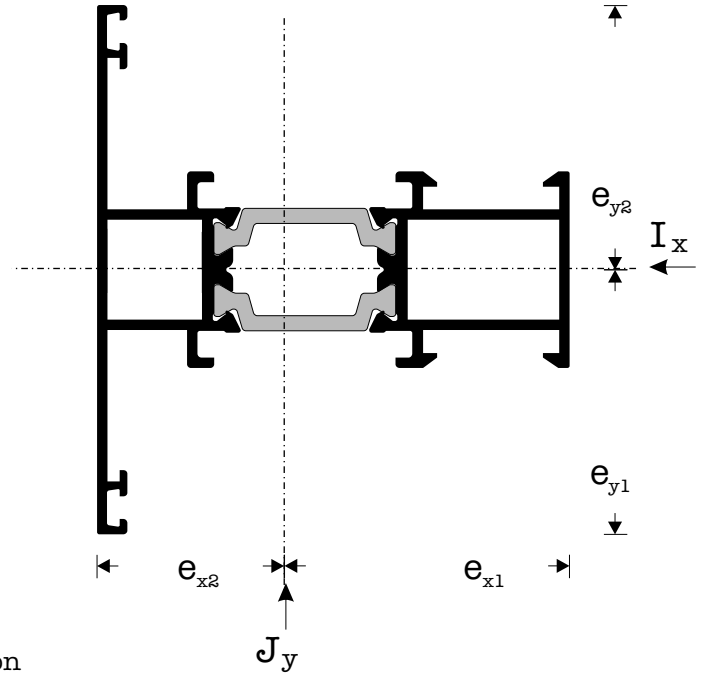

Table 1.1 Statistical Information

Profile	Moment of Inertia about Neutral Axis I_X (cm^4)	Moment of Resistance W_X (cm^3)	Distance from Centroid e_{Y1} (cm)	Distance from Centroid e_{X2} (cm)	Moment of Inertia about Neutral Axis J_Y (cm^4)	Moment of Resistance W_Y (cm^3)	Distance from Centroid e_{X1} (cm)	Distance from Centroid e_{Y2} (cm)	Area A (cm^2)	Perimeter P (cm)
M11152	12,11	3,86	2,50	3,14	24,65	6,85	3,11	3,60	5,73	34,5
M11156	2,88	0,75	2,30	2,26	13,70	5,96	3,84	1,60	4,26	32,5
M11158	2,93	0,95	1,59	3,07	16,02	6,94	3,02	2,31	4,39	27,2
M11162	5,03	1,69	2,37	2,97	16,15	6,46	2,98	2,50	4,56	27,7
M11164	0,13	0,07	0,81	1,80	1,14	1,41	1,74	0,63	1,15	14,3
M11168	34,73	4,09	2,68	8,49	178,51	43,33	6,25	4,12	9,52	58,7
M11170	1,27	0,41	0,76	2,91	12,58	8,86	3,07	1,42	4,09	31,6
M11172	0,11	0,04	0,64	2,50	3,60	5,63	2,42	0,36	1,61	17,4
M11174	2,63	1,06	1,22	2,44	9,63	7,89	2,48	1,17	4,38	16,8
M11178	12,77	3,66	3,00	2,51	15,02	5,00	3,49	3,00	5,30	24,5
M11180	0,10	0,10	0,80	0,94	0,20	0,24	0,96	0,82	0,67	10,2
M11181	0,10	0,08	0,80	1,18	0,40	0,49	1,33	0,82	0,71	10,5
M11182	0,44	0,26	1,22	1,70	1,20	0,98	1,69	1,23	1,00	15,0
M11188	43,01	7,47	4,50	5,76	84,65	18,81	5,09	4,50	9,11	51,8
M11190	40,00	10,55	4,82	3,21	39,39	8,17	3,79	4,79	7,95	47,9
M11198	4,78	1,11	1,69	3,26	21,48	9,72	4,32	2,21	4,96	32,9
M11205	11,62	2,33	1,84	4,98	34,36	8,68	4,01	3,96	6,44	47,9
M11210	0,27	0,44	0,90	0,61	0,15	0,14	0,61	1,09	1,05	11,0
M11211	0,50	0,57	1,41	0,88	0,46	0,58	1,26	0,79	0,99	12,6
M11216	19,88	4,93	3,68	3,84	43,72	11,15	4,03	3,92	7,34	45,7
M11217	18,38	3,55	3,64	5,18	49,13	9,48	4,18	3,96	7,60	48,8
M11218	4,10	2,70	3,11	1,52	0,27	0,09	0,51	2,27	1,28	17,3
M11226	0,25	0,18	0,92	1,37	0,48	0,45	1,29	1,06	0,84	11,5
M11234	64,34	19,92	5,13	3,23	51,46	9,69	3,79	5,31	9,05	45,7

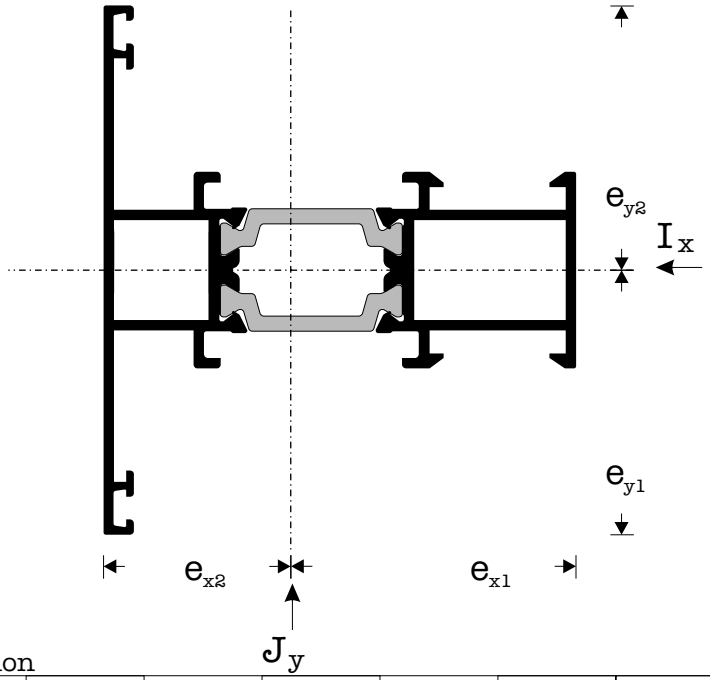

Table 1.1 Statistical Information

Profile	Moment of Inertia about Neutral Axis I_X	Moment of Resistance W_X	Distance from Centroid e_{Y1}	Distance from Centroid e_{X2}	Moment of Inertia about Neutral Axis J_Y	Moment of Resistance W_Y	Distance from Centroid e_{X1}	Distance from Centroid e_{Y2}	Area A	Perimeter P
	(cm^4)	(cm^3)	(cm)	(cm)	(cm^4)	(cm^3)	(cm)	(cm)	(cm^2)	(cm)
M11238	81,37	24,51	5,02	3,32	59,13	10,91	4,53	5,42	9,73	47,9
M11242	181,06	57,66	7,65	2,94	58,63	7,66	3,14	7,56	11,80	56,7
M11244	14,54	4,15	3,77	3,50	31,73	8,26	3,50	3,84	6,65	45,5
M11258	10,50	2,56	2,85	3,29	25,56	6,93	4,10	3,69	5,96	45,1
M11262	335,86	117,6	7,49	2,86	60,63	6,58	3,39	9,21	13,69	57,1
M11266	24,28	7,04	4,50	2,80	29,50	6,56	3,45	4,50	7,02	43,8
M11270	2,53	0,74	0,88	3,40	18,26	7,61	3,33	2,40	4,35	36,4
M11274	0,93	0,32	0,79	2,58	8,88	8,38	2,92	1,06	3,68	16,6
M11281	0,11	0,10	0,45	1,15	0,65	0,90	1,51	0,72	0,86	11,8
M11286	30,88	8,60	3,08	3,59	43,84	11,78	4,15	3,72	7,61	39,8
M11288	31,01	8,94	3,06	3,47	49,95	13,36	4,26	3,74	7,47	39,8
M11314	29,99	1,06	3,03	2,84	28,93	0,60	3,41	4,82	6,85	40,5
M11318	35,80	9,45	3,17	3,79	43,76	9,35	3,95	4,68	7,31	45,8
M11320	11,82	2,98	3,35	3,77	37,52	11,20	3,97	3,25	6,64	48,7
M11324	20,44	5,11	3,83	3,74	42,65	11,14	4,00	3,77	7,26	50,7
M11328	48,91	11,93	4,82	3,64	52,16	10,82	4,10	4,78	8,57	54,7
M11330	11,24	2,82	3,40	3,75	36,83	10,83	3,99	3,21	6,62	49,5
M11334	19,50	4,84	3,88	3,71	41,54	10,71	4,03	3,72	7,25	51,5
M11338	47,55	11,60	4,88	3,65	51,79	10,61	4,10	4,72	8,64	55,5
M11340	8,10	2,31	3,40	3,50	27,97	8,23	3,50	3,20	6,09	42,6
M11342	118,61	41,47	6,89	2,86	50,94	7,48	3,39	6,81	10,27	52,6
M11344	15,03	4,26	3,88	3,47	31,99	8,25	3,53	3,72	6,72	44,6
M11348	39,95	11,07	4,89	3,39	41,31	8,45	3,61	4,71	8,21	48,6
M11350	7,14	1,99	3,34	3,56	28,84	8,63	3,59	3,26	6,02	42,6

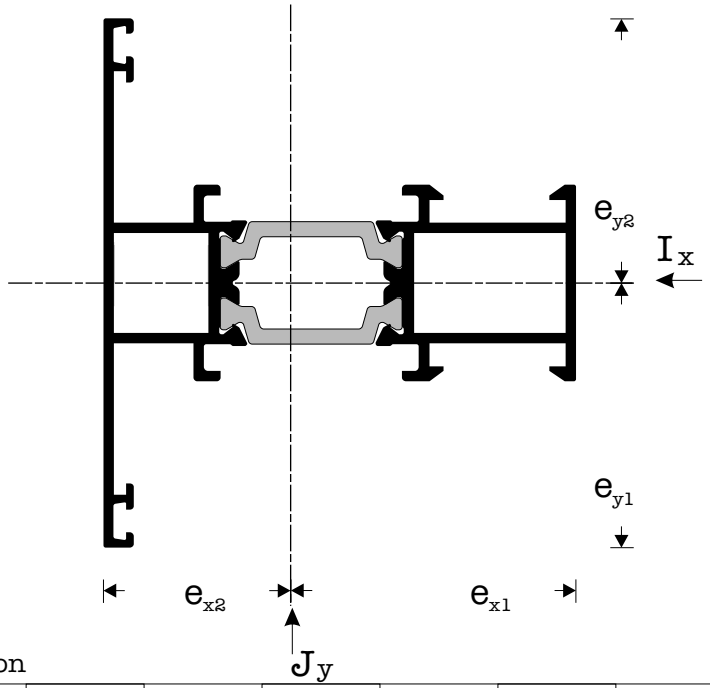

Table 1.1 Statistical Information

	Moment of Inertia about Neutral Axis	Moment of Resistance	Distance from Centroid	Distance from Centroid	Moment of Inertia about Neutral Axis	Moment of Resistance	Distance from Centroid	Distance from Centroid	Area	Perimeter
Profile	I_X	W_X	e_{Y1}	e_{X2}	J_Y	W_Y	e_{X1}	e_{Y2}	A	P
	(cm^4)	(cm^3)	(cm)	(cm)	(cm^4)	(cm^3)	(cm)	(cm)	(cm^2)	(cm)
M11354	13,61	3,88	3,82	3,51	32,06	8,39	3,49	3,78	6,62	43,2
M11358	37,79	10,59	4,84	3,44	41,59	8,59	3,57	4,76	8,16	47,2
M11362	12,58	2,91	3,50	3,41	35,30	10,09	4,33	3,50	6,22	49,1
M11366	32,72	7,74	4,50	3,51	45,03	10,01	4,23	4,50	7,49	53,1
M11370	13,66	3,57	3,83	4,81	36,60	7,61	3,68	3,77	6,99	47,7
M11390	47,19	11,48	4,78	3,64	51,14	10,59	4,11	4,83	8,42	55,1
M11391	46,49	11,12	4,83	3,62	51,23	10,61	4,18	4,78	8,56	56,1
M11392	38,73	10,25	4,81	3,22	39,18	8,15	3,78	4,80	7,93	48,8
M11393	44,55	11,69	4,99	3,19	41,13	8,21	3,81	5,01	8,26	46,8
M11442	134,97	47,19	7,08	2,86	52,83	7,14	3,39	7,07	10,62	53,6
M11451	0,80	0,81	1,63	0,99	0,48	0,29	0,86	1,03	1,11	17,8
M11452	0,85	0,69	1,68	1,24	0,69	0,42	1,02	0,98	1,16	18,3
M11453	0,88	0,61	1,71	1,44	0,97	0,57	1,17	0,95	1,20	18,9
M11454	0,94	0,54	1,77	1,73	1,34	0,76	1,32	0,89	1,29	20,6
M11455	1,03	0,44	1,84	2,33	2,92	3,56	1,82	0,82	1,50	23,8
M11456	0,73	0,74	1,56	0,99	0,40	0,40	0,93	1,10	1,05	1,69
M11461	0,74	0,80	1,56	0,92	0,40	0,26	0,93	1,10	1,05	16,9
M11462	0,79	0,68	1,61	1,16	0,59	0,37	1,09	1,05	1,09	1,76
M11463	0,83	0,60	1,67	1,38	0,87	0,52	1,27	0,99	1,15	18,3
M11464	0,89	0,54	1,72	1,64	1,18	0,69	1,41	0,94	1,23	19,7
M11465	0,88	0,54	1,72	1,63	1,20	0,70	1,42	0,94	1,22	19,3
M11471	0,12	0,08	0,90	1,58	0,51	0,57	0,97	0,70	0,85	10,8
M11472	1,20	0,85	1,66	1,42	0,35	0,21	0,53	1,62	1,16	15,7
M11473	0,06	0,08	0,92	0,75	0,03	0,03	0,25	0,73	0,39	5,9

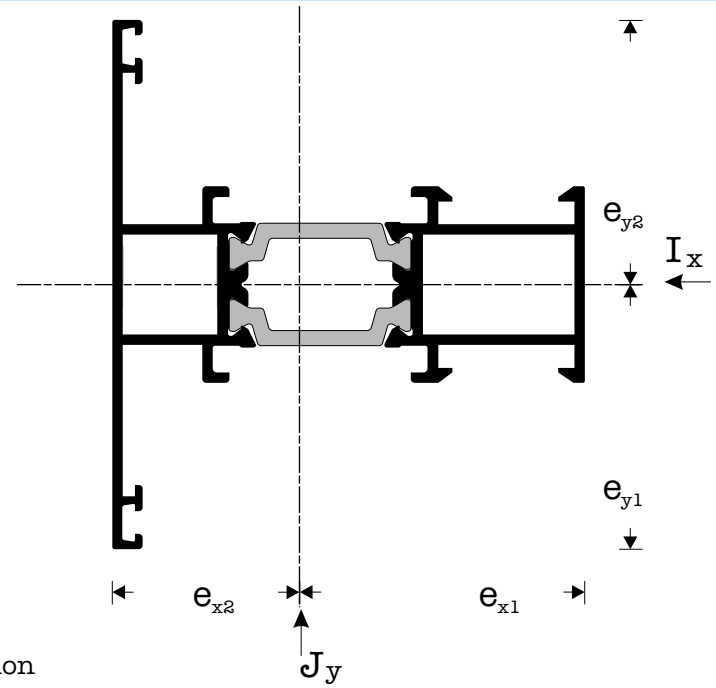

Table 1.1 Statistical Information

Profile	Moment of Inertia about Neutral Axis	Moment of Resistance	Distance from Centroid	Distance from Centroid	Moment of Inertia about Neutral Axis	Moment of Resistance	Distance from Centroid	Distance from Centroid	Area	Perimeter
	I_X	W_X	e_{Y1}	e_{X2}	J_Y	W_Y	e_{X1}	e_{Y2}	A	P
	(cm^4)	(cm^3)	(cm)	(cm)	(cm^4)	(cm^3)	(cm)	(cm)	(cm^2)	(cm)
M11474	3,27	0,77	1,58	3,43	20,47	10,72	4,26	1,91	5,10	40,1
M11475	1,37	0,58	1,51	2,37	3,01	1,44	1,69	2,09	1,35	18,0
M11476	3,79	0,80	2,74	4,76	35,20	12,31	4,94	2,86	2,78	32,0
M11477	3,87	0,57	2,73	6,75	81,99	28,57	6,95	2,87	3,46	40,0
M11478	7,13	0,86	1,82	8,25	134,38	35,55	8,45	3,78	3,96	45,9
M11479	3,98	0,41	2,76	9,74	204,13	70,63	9,96	2,89	4,47	51,9
M11480	0,62	0,38	1,11	0,84	0,65	0,41	1,62	1,57	1,04	14,1
M11501	1,69	0,36	1,15	4,01	27,65	24,04	4,69	1,15	4,64	24,5
M11558	9,20	3,26	2,85	2,82	22,03	5,97	3,99	3,69	6,93	42,0
M11574	3,57	0,86	1,57	4,14	35,64	18,56	5,05	1,92	5,52	40,7

SYSTEM 11000

"ALUTHERM PLUS"

PROFILES

Art.-No	Article description	Page
M11008	FRAME SMALL FLAT	III/11
M11010	FRAME MEDIUM FLAT	III/11
M11014	FRAME LARGE FLAT	III/11
M11016	FRAME MEDIUM ROUND	III/12
M11018	FRAME LARGE ROUND	III/12
M11020	FRAME “CLASSIC”	III/13
M11026	FRAME SMALL ROUND	III/12
M11028	FRAME “CLASSIC”	III/13
M11030	SASH SMALL FLAT	III/21
M11034	SASH MEDIUM FLAT	III/21
M11038	SASH LARGE FLAT	III/21
M11040	SASH SMALL ROUND	III/22
M11044	SASH MEDIUM ROUND	III/22
M11048	SASH LARGE ROUND	III/22
M11050	SASH “CLASSIC”	III/23
M11058	ADJOINING PROFILE FLAT	III/44
M11062	“T” - PROFILE	III/37
M11064	“T” - PROFILE	III/37
M11066	“T” - PROFILE	III/37
M11068	“T” - PROFILE	III/38
M11070	“T” - PROFILE	III/39
M11074	“T” - PROFILE	III/43
M11076	“T” - PROFILE EXPANSION JOINT	III/18
M11078	“T” - PROFILE ROUND LARGE	III/42
M11080	FRAME EXPANSION JOINT	III/18
M11082	SASH FOR DOOR OPENING INSIDE	III/33
M11084	SASH FOR DOOR OPENING OUTSIDE	III/33
M11086	FRAME FOR DOOR	III/32
M11088	FRAME FOR DOOR	III/32
M11090	CORNER PROFILE 90°	III/48
M11092	CORNER PROFILE 135°	III/48
M11094	CORNER PROFILE ROUND 135°	III/49
M11096	CORNER PROFILE ROUND 90°	III/49
M11113	TRANSVERSE	III/56
M11114	COVER	III/56
M11115	TRANSVERSE	III/56
M11116	WATER CAP	III/52
M11118	SUPPLEMENTARY PROFILE DECORATIVE	III/60
M11119	SUPPLEMENTARY PROFILE DECORATIVE	III/60
M11120	FINISHING END COVER	III/68
M11121	FINISHING END COVER	III/68
M11130	SASH OPENING OUTSIDE SMALL	III/30
M11134	SASH FOR DOOR ROUND OPENING INSIDE	III/35
M11138	SASH FOR DOOR ROUND OPENING OUTSIDE	III/35
M11142	KICKPLATE	III/19
M11144	SUPPLEMENTARY PROFILE EXTENSION	III/32
M11148	SASH FOR PIVOTING WINDOW	III/45
M11149	LARGE FRAME WINDOW/SHUTTER	III/15
M11152	ADJOINING PROFILE FOR PIVOTING WINDOW	III/45
M11156	ADJOINING PROFILE OPENING INSIDE ROUND	III/46
M11158	ADJOINING PROFILE OPENING OUTSIDE FLAT	III/47
M11162	SUPPLEMEN. PROFILE FOR DOORS OPEN. OUTSIDE	III/47
M11164	SUPPLEMENT. PROFILE FOR DOORS OP. INSIDE	III/50
M11168	FRAME / COLUMN ROUND	III/17
M11170	SUPPLEMENTARY PROFILE FOR DOORS	III/53
M11172	THRESHOLD RAISED	III/54
M11174	THRESHOLD FLUSH	III/54
M11178	CIRCULAR COLUMN FOR VARIABLE ANGELS	III/50
M11180	ADJOINING PROFILE FOR CIRCULAR COLUMN	III/51
M11181	ADJOINING PROFILE FOR CIRCULAR COLUMN	III/51
M11182	ADJOINING PROFILE FOR CIRCULAR COLUMN	III/51
M11188	“T” - PROFILE ROUND SMALL	III/41
M11190	SASH OPENING OUTSIDE LARGE	III/29
M11198	ADJOINING PROFILE OPENING INSIDE ROUND	III/46
M11205	FRAME TWO PIECE	III/16
M11210	SUPPLEMENTARY PROFILE FOR DOORS	III/64
M11211	SUPPLEMENTARY PROFILE FOR DOORS	III/64
M11216	SASH	III/23
M11217	SASH “CLASSIC”	III/24
M11218	SUPPLEMENTARY PROFILE FOR KICK PLATE	III/61
M11226	WATER CAP	III/52
M11234	SASH FOR DOOR ROUND OP. INSIDE LARGE	III/36
M11238	SASH FOR DOOR ROUND OP. OUTSIDE LARGE	III/36
M11242	KICK PLATE	III/19
M11244	SASH - FRAME ROUND	III/23
M11258	ADJOINING PROFILE ROUND	III/44
M11262	FRAME “CLASSIC” FOR DOORS	III/14
M11266	“T” - PROFILE	III/38
M11270	SUPPLEMENTARY PROFILE FOR DOORS	III/53
M11274	THRESHOLD	III/54
M11281	SUPPLEMENTARY PROFILE	III/63
M11286	FRAME FOR DOOR ROUND	III/34
M11288	FRAME FOR DOOR ROUND OUTSIDE	III/34
M11314	FRAME “CLASSIC”	III/14
M11318	FRAME FOR DOOR ROUND	III/34
M11320	SASH SMALL “PVC-LOOK”	III/25
M11324	SASH MEDIUM “PVC-LOOK”	III/25
M11328	SASH LARGE“PVC-LOOK”	III/25
M11330	SASH SMALL “PVC-LOOK”	III/28
M11334	SASH MEDIUM “PVC-LOOK”	III/28
M11338	SASH LARGE “PVC-LOOK”	III/28
M11340	SASH SMALL ROUND	III/27
M11342	KICKPLATE	III/20
M11344	SASH MEDIUM ROUND	III/27
M11348	SASH LARGE ROUND	III/27
M11350	SASH SMALL FLAT	III/26
M11354	SASH MEDIUM FLAT	III/26
M11358	SASH LARGE FLAT	III/26
M11362	“T” - PROFILE SMALL “PVC-LOOK”	III/40
M11366	“T” - PROFILE LARGE “PVC-LOOK”	III/40
M11370	SASH SMALL CLASSIC	III/24
M11390	SASH OPENING OUTSIDE “PVC-LOOK” LARGE	III/31
M11391	SASH OPENING OUTSIDE “PVC-LOOK” LARGE	III/31
M11392	SASH OPENING OUTSIDE ROUND LARGE	III/30

Art.-No	Article description	Page	Art.-No	Article description	Page
M11393	SASH OPENING OUTSIDE FLAT LARGE	III/29			
M11442	KICKPLATE	III/20			
M11451	GLAZING BEAD	III/65			
M11452	GLAZING BEAD	III/66			
M11453	GLAZING BEAD	III/66			
M11454	GLAZING BEAD	III/66			
M11455	GLAZING BEAD	III/66			
M11456	GLAZING BEAD	III/67			
M11461	GLAZING BEAD	III/67			
M11462	GLAZING BEAD	III/67			
M11463	GLAZING BEAD	III/67			
M11464	GLAZING BEAD	III/68			
M11465	GLAZING BEAD	III/68			
M11471	SUPPLEMENTARY PROFILE DOORS	III/63			
M11472	SUPPLEMENTARY PROFILE DOORS	III/63			
M11473	END CAP DRIP SILL	III/58			
M11474	WATER EVACUATION PROFILE	III/55			
M11475	DRIP SILL SMALL	III/57			
M11476	DRIP SILL SMALL	III/57			
M11477	DRIP SILL LARGE	III/57			
M11478	DRIP SILL LARGE	III/57			
M11479	DRIP SILL LARGE	III/58			
M11480	EXTENSION PROFILE	III/62			
M11501	SUPPLEMENTARY PROFILE OPENING - SLIDING	III/52			
M11558	ADJOINING PROFILE FLAT	III/43			
M11574	WATER EVACUATION PROFILE	III/55			
M 216	SUPPLEMENTARY PROFILE DECORATIVE	III/61			
M 946	GLAZING BEAD	III/16			
M 6001	SUPPLEMENTARY PROFILE DECORATIVE	III/62			
M 9312	GLAZING BEAD	III/16			
M 9313	GLAZING BEAD	III/16			
M 9317	WATER CAP	III/52			
M 9379	FRAME TWO PIECE	III/16			
M 9381	FRAME TWO PIECE	III/17			

M 11008

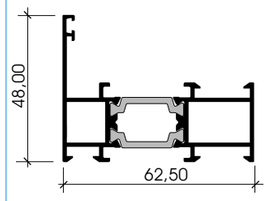

M 11010

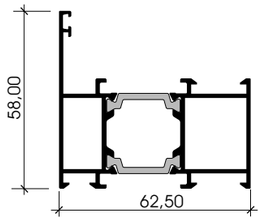

M 11014

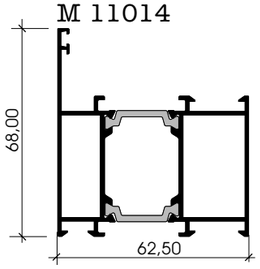

M 11028

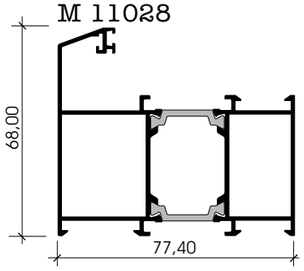

M 11262

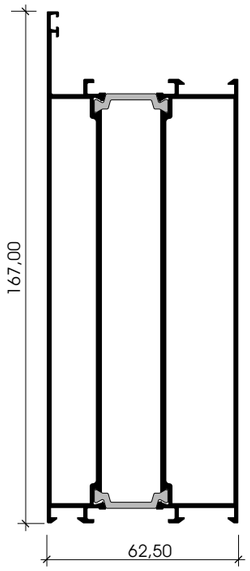

M 11026

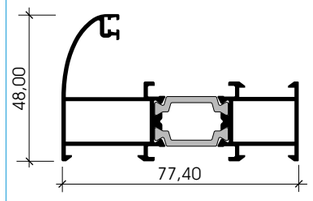

M 11016

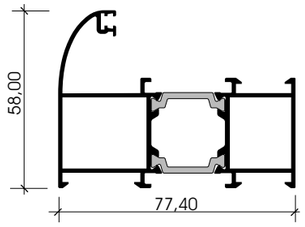

M 11018

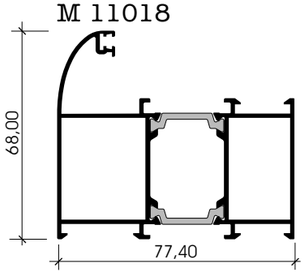

M 11020

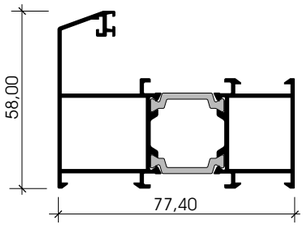

M 11142

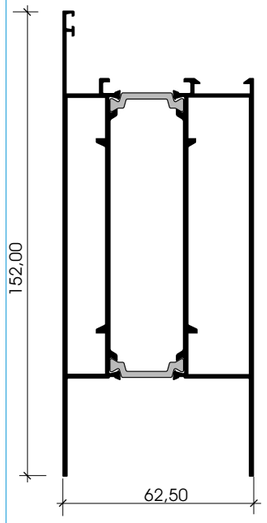

M 11242

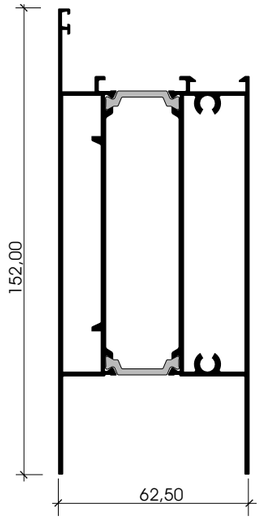

M 11342

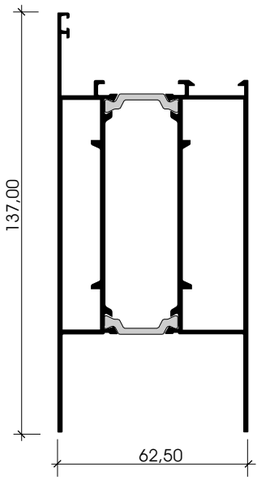

M 11442

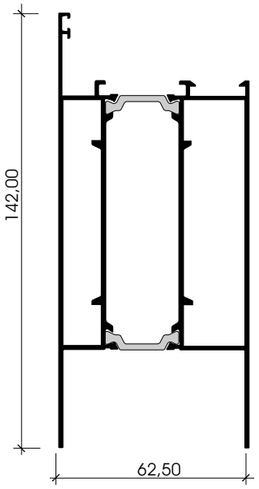

M 11149

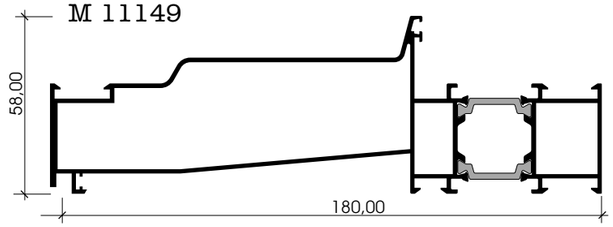

M 11168

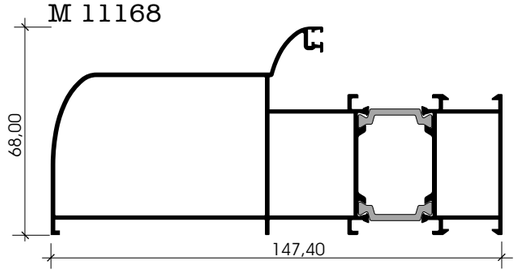

M 11314

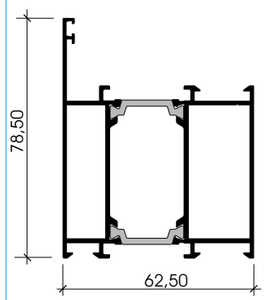

M 9379

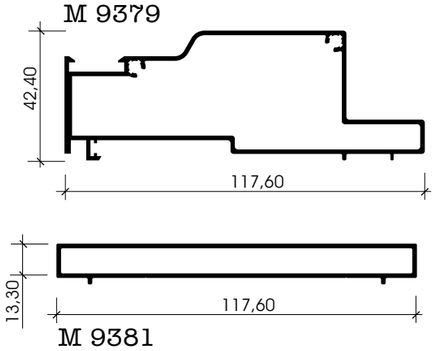

M 9381

M 11205

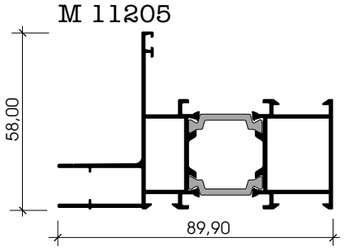

M 11076

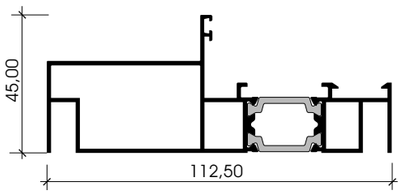

M 11080

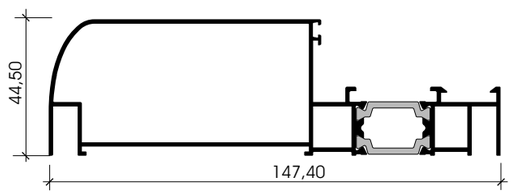

M 11030

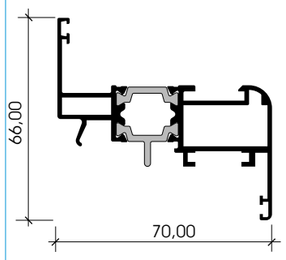

M 11350

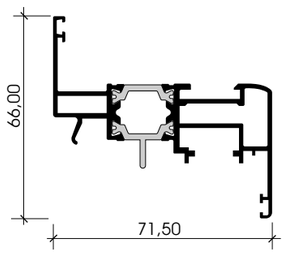

M 11320

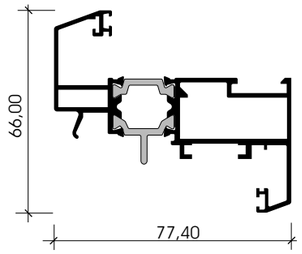

M 11330

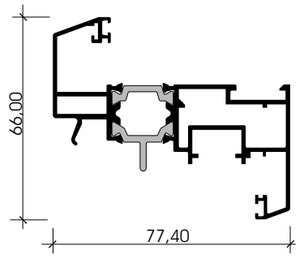

M 11340

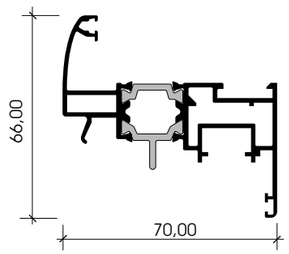

M 11040

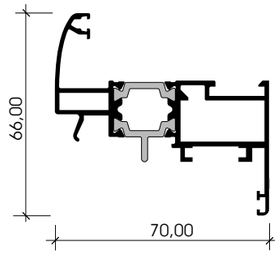

M 11216

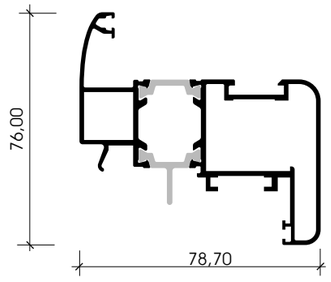

M 11034

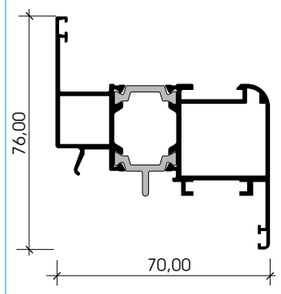

M 11354

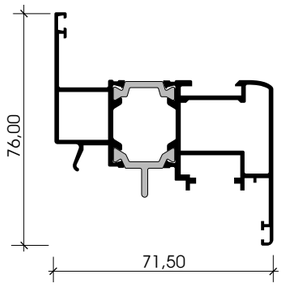

M 11324

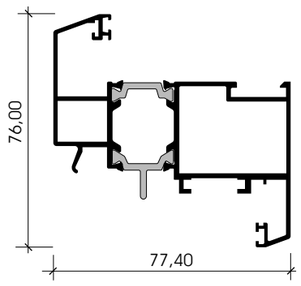

M 11334

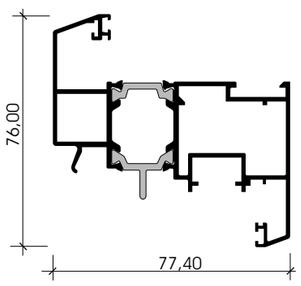

M 11344

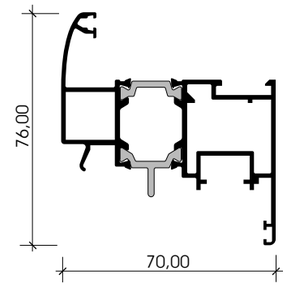

M 11044

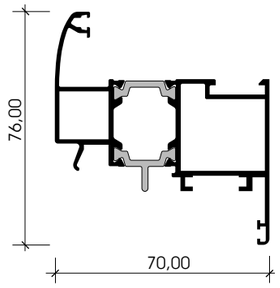

M 11217

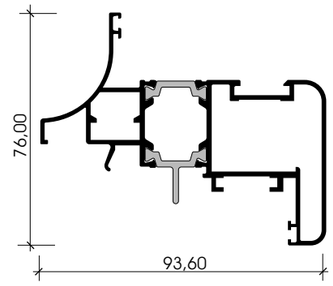

M 11038

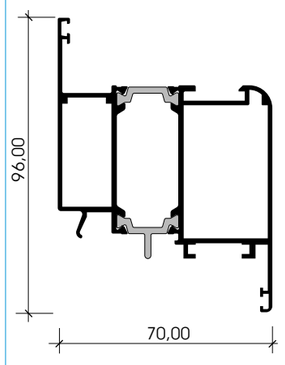

M 11358

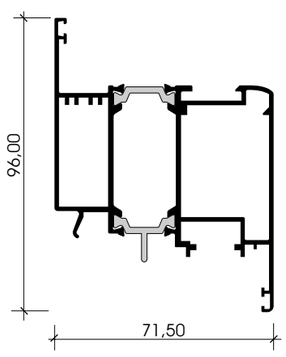

M 11328

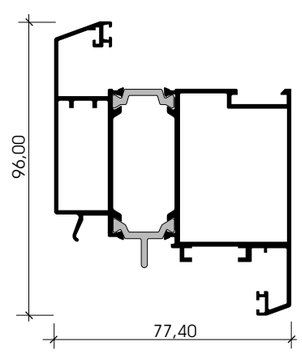

M 11338

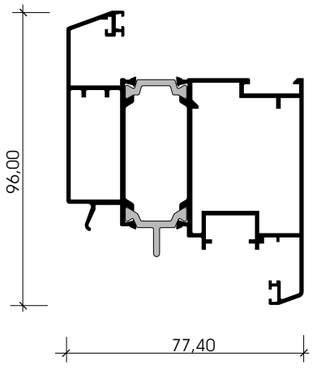

M 11348

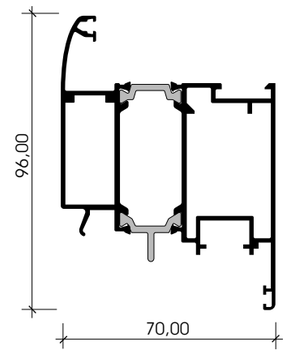

M 11048

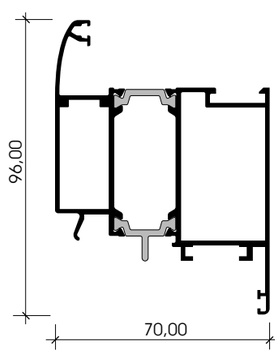

M 11050

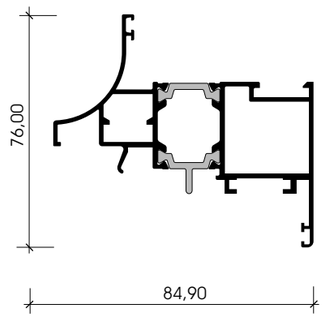

M 11244

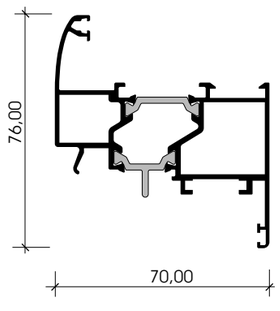

M 11370

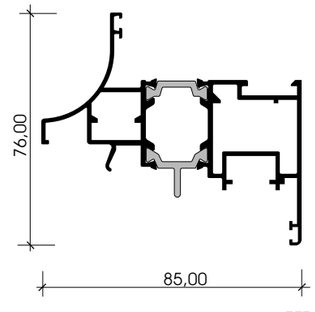

M 11393

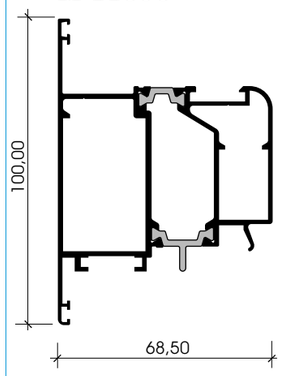

M 11390

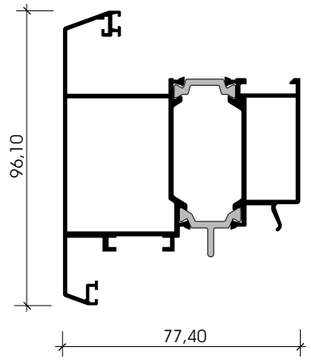

M 11391

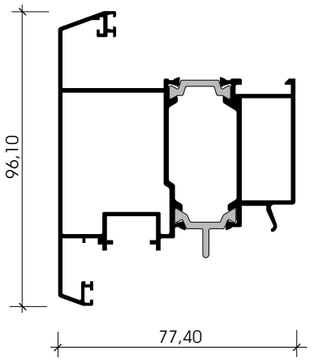

M 11190

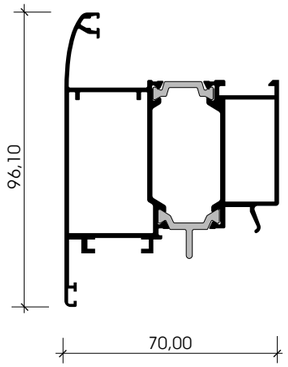

M 11392

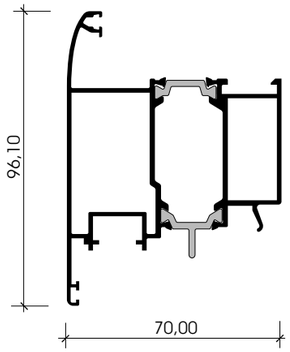

M 11130

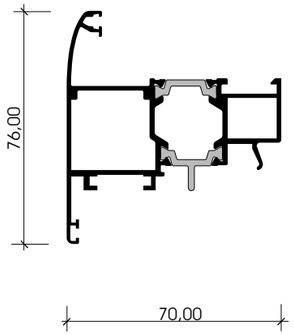

M 11086

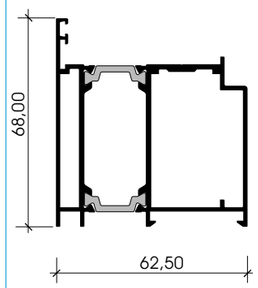

M 11088

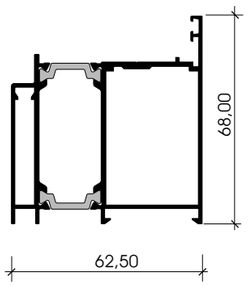

M 11144

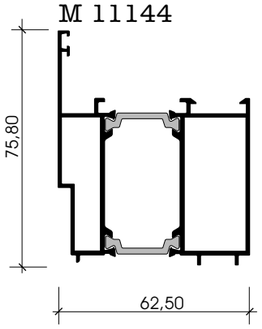

M 11286

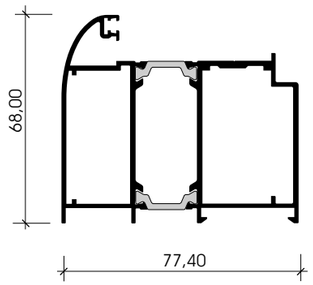

M 11288

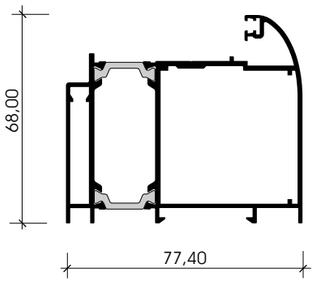

M 11318

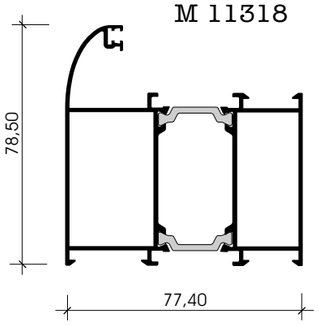

M 11082

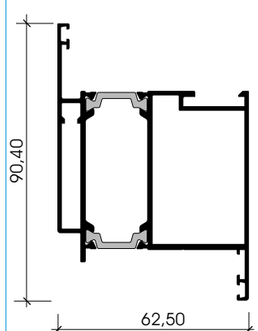

M 11084

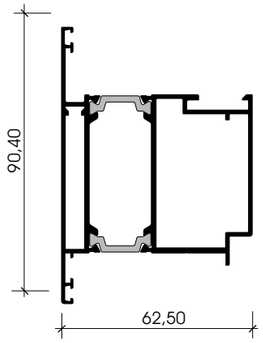

M 11234

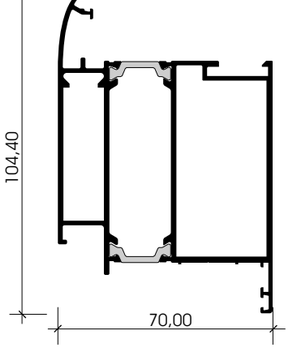

M 11134

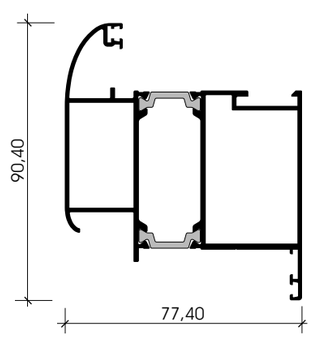

M 11138

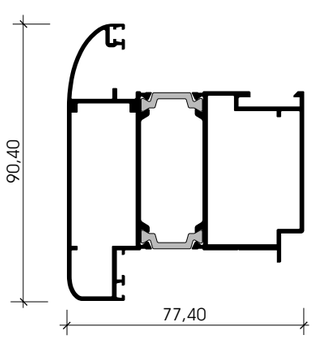

M 11238

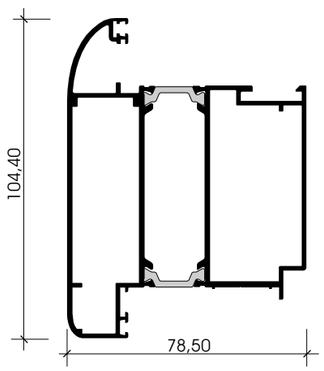

M 11062

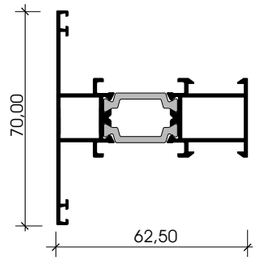

M 11064

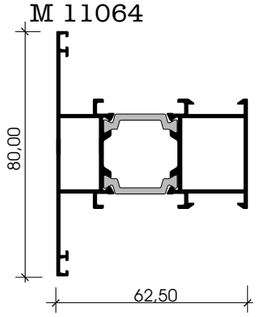

M 11068

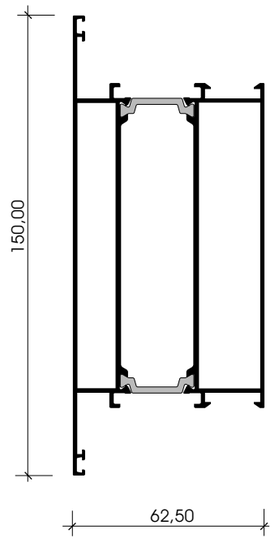

M 11366

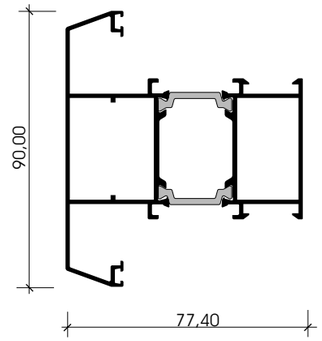

M 11362

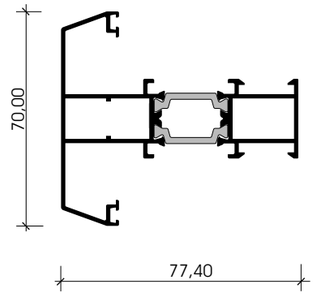

M 11066

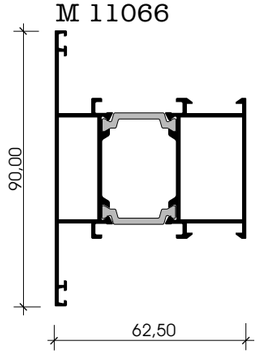

M 11266

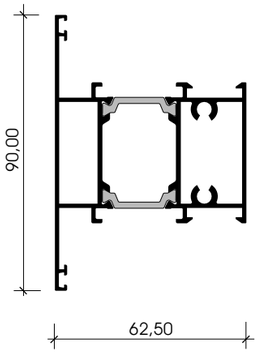

M 11070

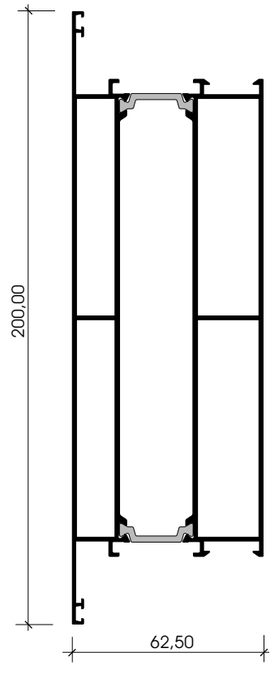

M 11074

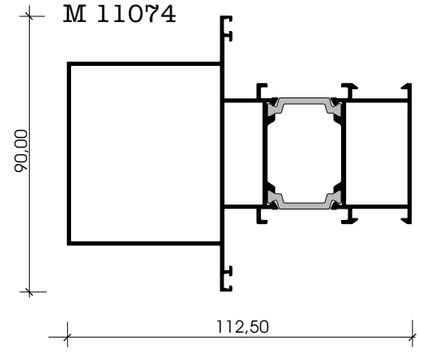

M 11188

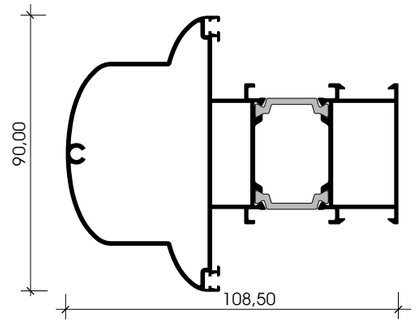

M 11078

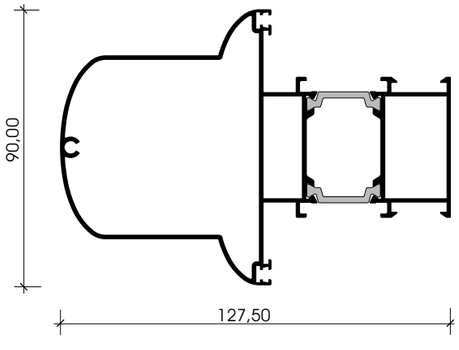

M 11148
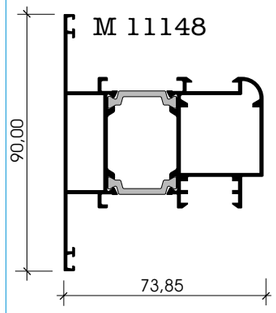

M 11058
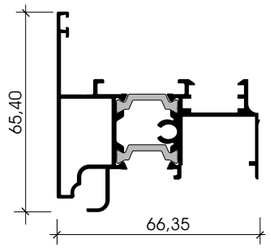

M 11258
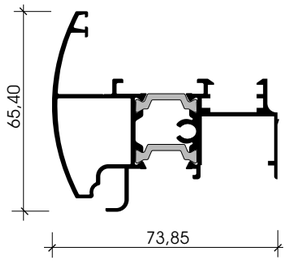

M 11558
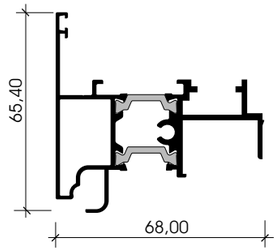

M 11164
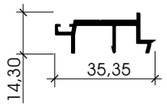

M 11210
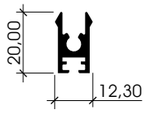

M 11211
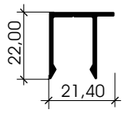

M 11501
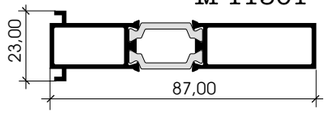

M 11172
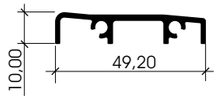

M 11170
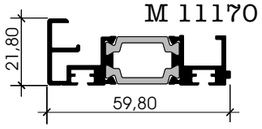

M 11574
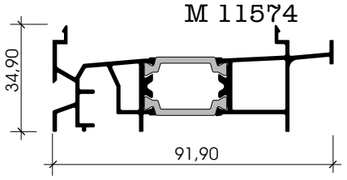

M 11174
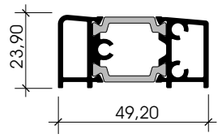

M 11270
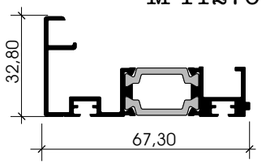

M 11152
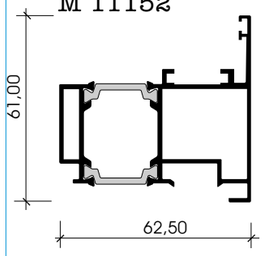

M 11156
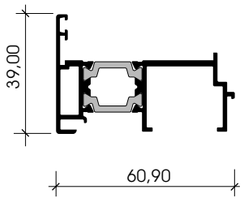

M 11198
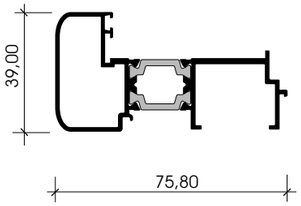

M 11158
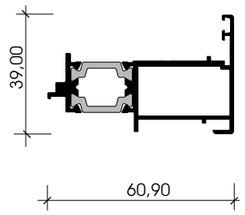

M 11162
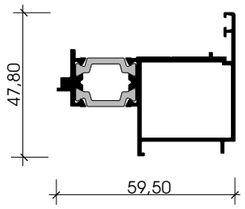

M 11474
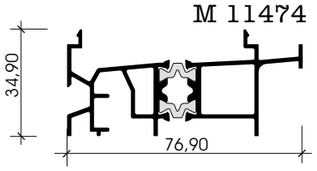

M 11274
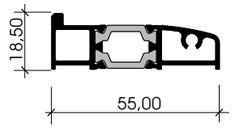

M 6001
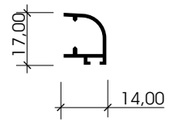

M 216
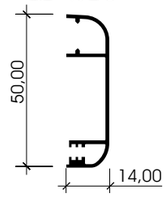

M 11119
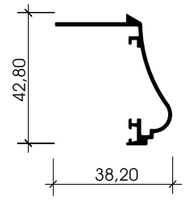

M 11118
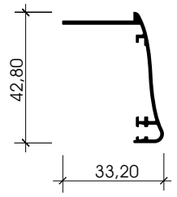

M 11090
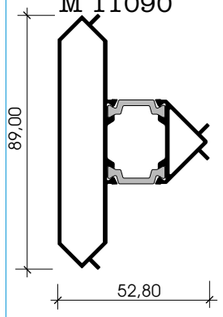

M 11092
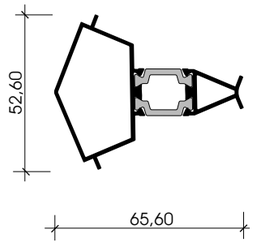

M 11178
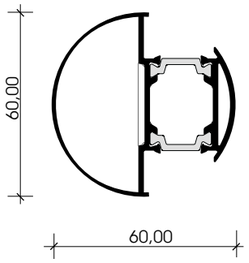

M 11094
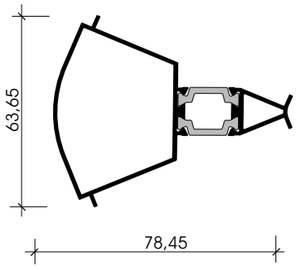

M 11096
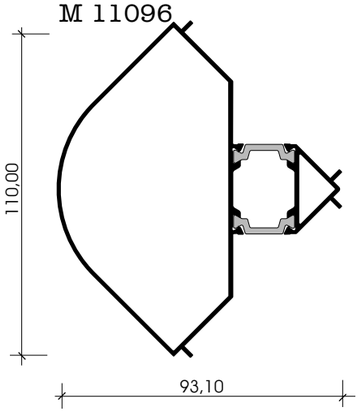

M 11218
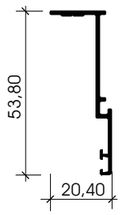

M 11281
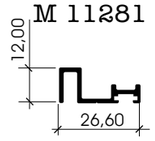

M 11473
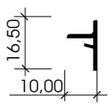

M 11181
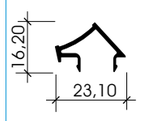

M 11116
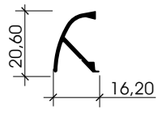

M 11477
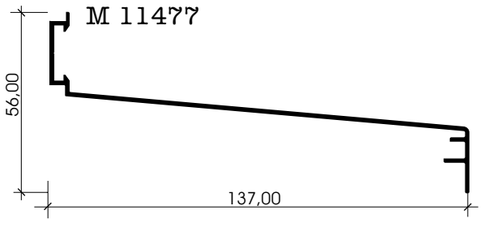

M 11476
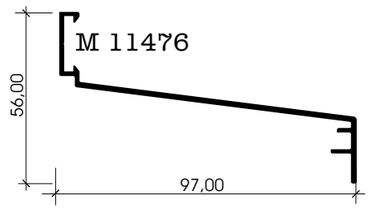

M 11475
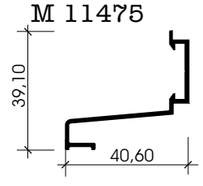

M 11480
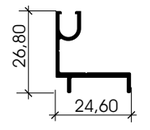

M 11113
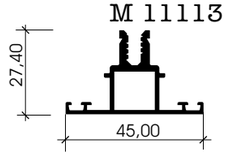

M 11180
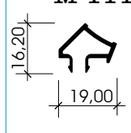

M 9317
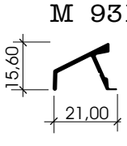

M 11478
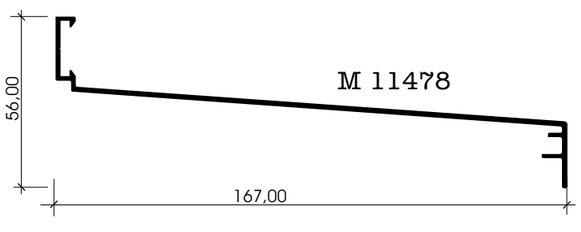

M 11479
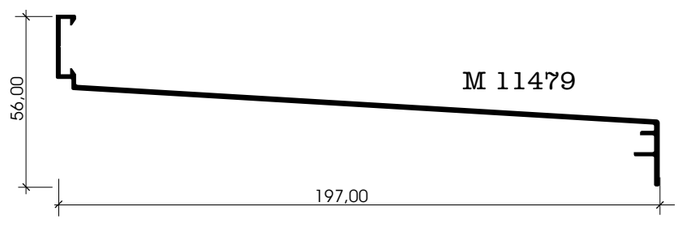

M 11471
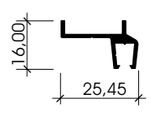

M 11115
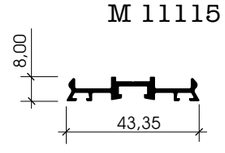

M 11182
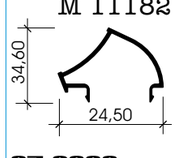

M 11226
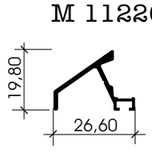

M 11472
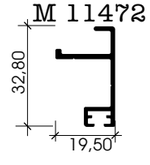

M 11114
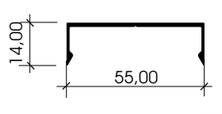

M 9313

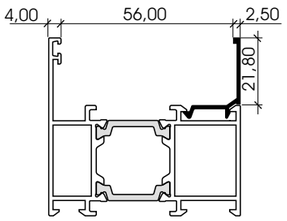

M 11008
M 11010
M 11014
M 11026
M 11016
M 11018
M 11020

M 11452

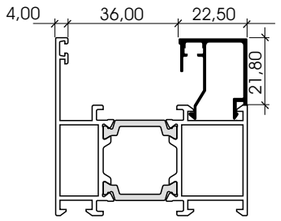

M 11008
M 11010
M 11014
M 11026
M 11016
M 11018
M 11020

M 11461

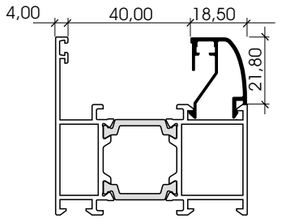

M 11008
M 11010
M 11014
M 11026
M 11016
M 11018
M 11020

M 11120

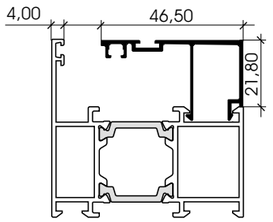

M 11008
M 11010
M 11014
M 11026
M 11016
M 11018
M 11020

M 946

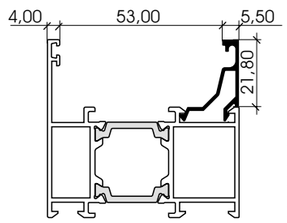

M 11008
M 11010
M 11014
M 11026
M 11016
M 11018
M 11020

M 11453

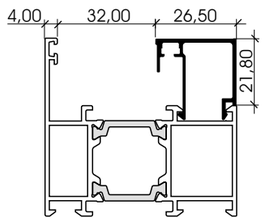

M 11008
M 11010
M 11014
M 11026
M 11016
M 11018
M 11020

M 11462

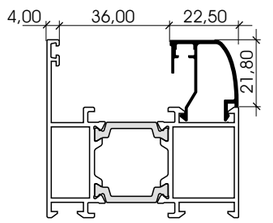

M 11008
M 11010
M 11014
M 11026
M 11016
M 11018
M 11020

M 11121

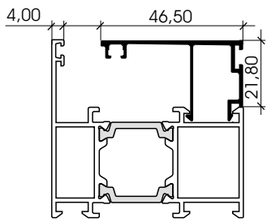

M 11008
M 11010
M 11014
M 11026
M 11016
M 11018
M 11020

M 9312

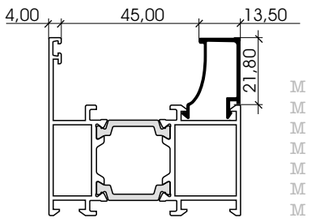

M 11008
M 11010
M 11014
M 11026
M 11016
M 11018
M 11020

M 11454

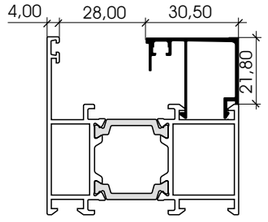

M 11008
M 11010
M 11014
M 11026
M 11016
M 11018
M 11020

M 11463

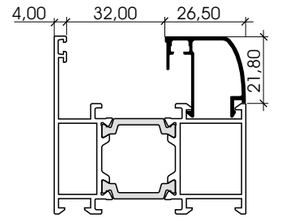

M 11008
M 11010
M 11014
M 11026
M 11016
M 11018
M 11020

M 11456

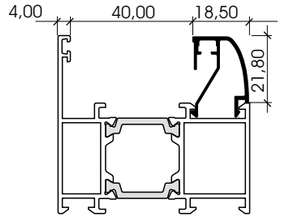

M 11008
M 11010
M 11014
M 11026
M 11016
M 11018
M 11020

M 11451

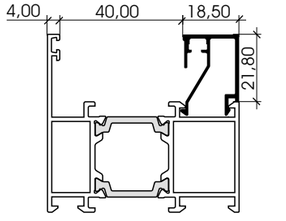

M 11008
M 11010
M 11014
M 11026
M 11016
M 11018
M 11020

M 11455

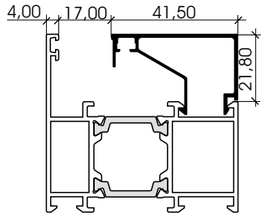

M 11008
M 11010
M 11014
M 11026
M 11016
M 11018
M 11020

M 11464

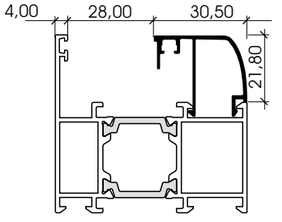

M 11008
M 11010
M 11014
M 11026
M 11016
M 11018
M 11020

M 11465

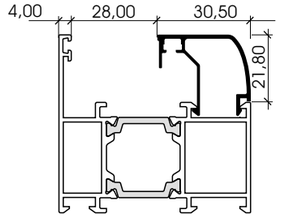

M 11008
M 11010
M 11014
M 11026
M 11016
M 11018
M 11020

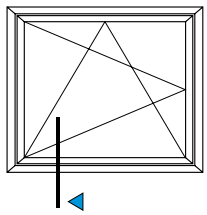

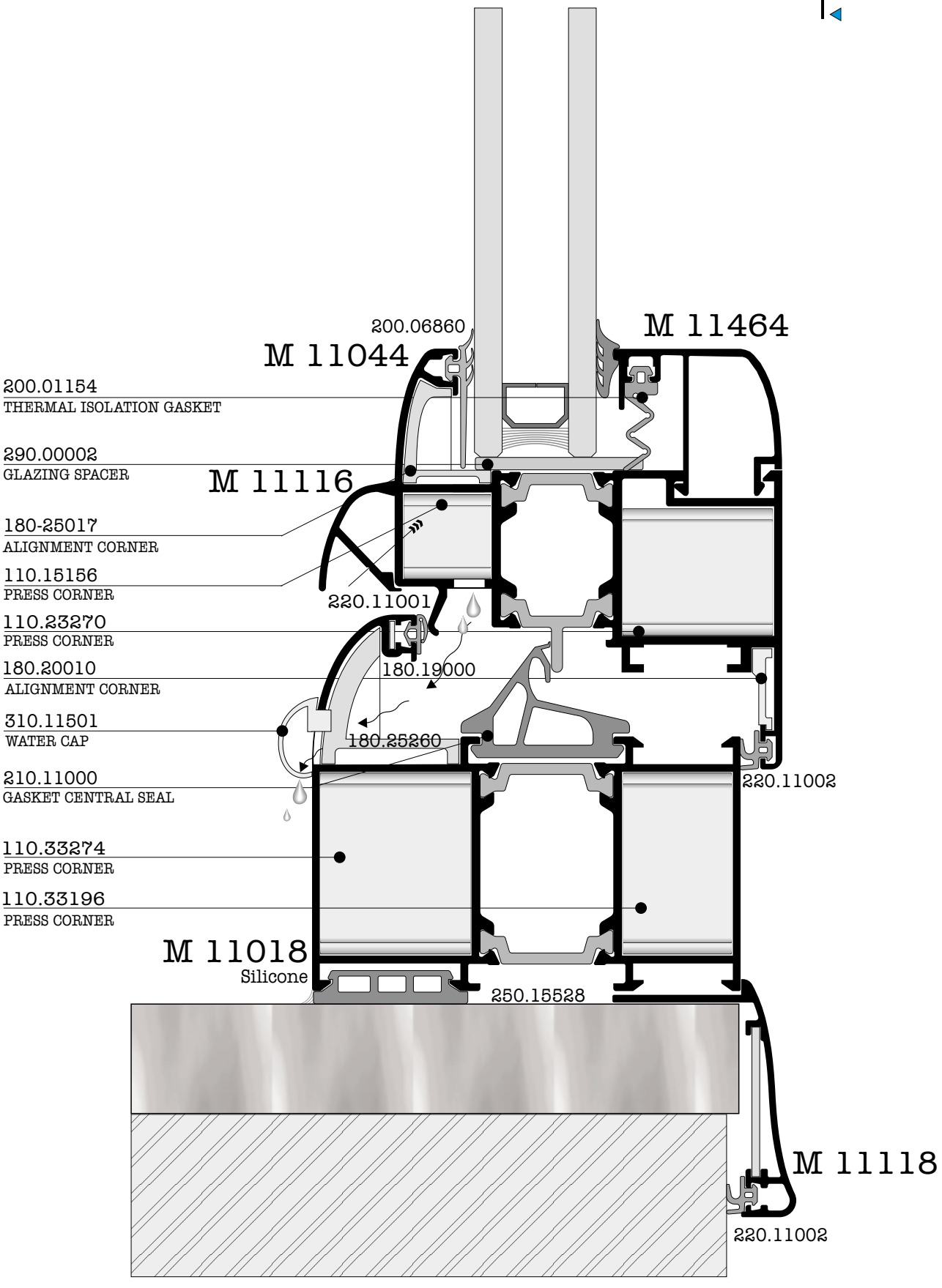
200.06860
M 11044
M 11464
200.01154
THERMAL ISOLATION GASKET
290.00002
GLAZING SPACER
M 11116
180-25017
ALIGNMENT CORNER
110.15156
PRESS CORNER
220.11001
110.23270
PRESS CORNER
180.20010
ALIGNMENT CORNER
180.19000
310.11501
WATER CAP
180.25260
210.11000
GASKET CENTRAL SEAL
220.11002
110.33274
PRESS CORNER
110.33196
PRESS CORNER
M 11018
Silicone
250.15528
M 11118
220.11002

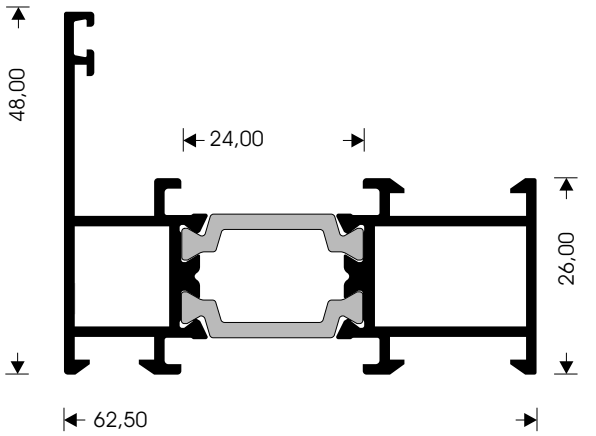

FRAME SMALL FLAT				
Art.No	M 11008		Weight (gr/m)	1133
Surface area (mm)	primary	78		
	perimeter	344		
Moments of inertia	Ix (cm^4)	4,91		
	Jy (cm^4)	18,37		

O P I

Press corners			"T"-Connectors		
Press corner	110.13196	I	T connector		I
	110.13121	O			O
Screw corner	120.13196	I	Nail		I
		O			O
Nailed corner		I	Screw		I
	130.13121	O			O

Alignment corners		Plastic end covers	
O	I		
180-25010			

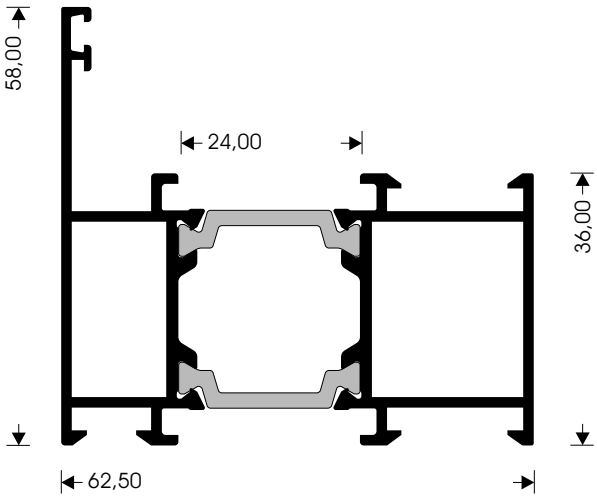

FRAME MEDIUM FLAT				
Art.No	M 11010		Weight (gr/m)	1300
Surface area (mm)	primary	98		
	perimeter	364		
Moments of inertia	Ix (cm^4)	10,17		
	Jy (cm^4)	21,58		

O P I

Press corners			"T"-Connectors		
Press corner	110.23196	I	T connector		I
	110.23121	O			O
Screw corner	120.23196	I	Nail		I
		O			O
Nailed corner		I			I
	130.23121	O			O

Alignment corners		Plastic end covers	
O	I		
180.25010			

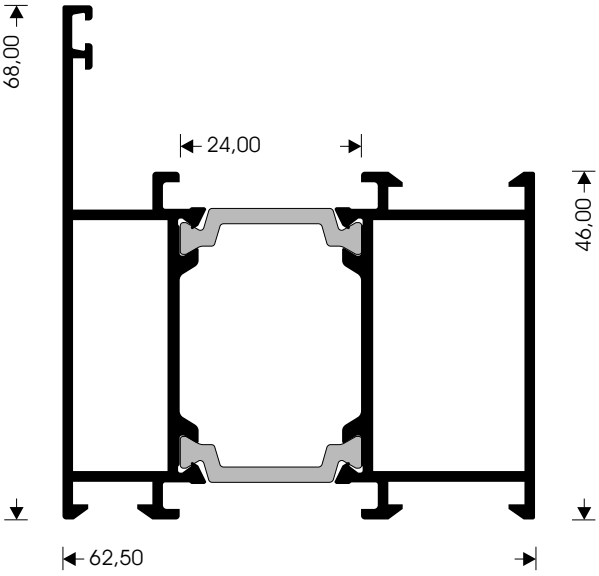

FRAME LARGE FLAT				
Art.No	M 11014		Weight (gr/m)	1462
Surface area (mm)	primary	118		
	perimeter	384		
Moments of inertia	Ix (cm^4)	18,22		
	Jy (cm^4)	24,75		

O P I

Press corners			"T"-Connectors		
Press corner	110.33196	I	T connector		I
	110.33121	O			O
Screw corner	120.33196	I	Nail		I
		O			O
Nailed corner		I	Screw		I
	130.33121	O			O

Alignment corners		Plastic end covers	
O	I		
180.25010			

O Outside part P Polyamide I Inside part

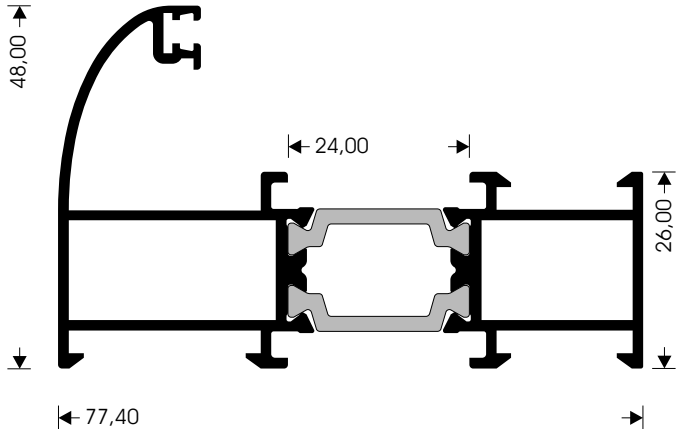

FRAME SMALL ROUND				
Art.No	M 11026		Weight (gr/m)	1307
Surface area (mm)	primary	84		
	perimeter	407		
Moments of inertia	Ix (cm^4)	7,00		
	Jy (cm^4)	29,76		

O P I

Press corners			"T"-Connectors		
Press corner	110.13196	I	T connector		I
	110.13270	O			O
Screw corner	120.13196	I	Nail		I
	120.13270	O			O
Nailed corner		I	Screw		I
		O			O

Alignment corners		Plastic end covers	
O	I		
180.25260			
180.19000			

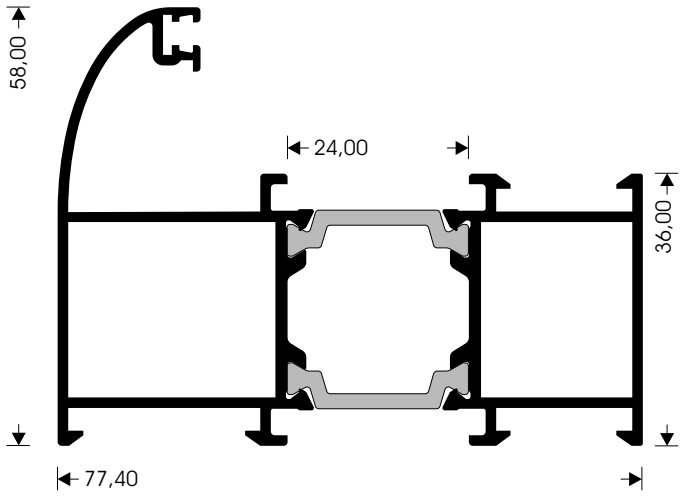

FRAME MEDIUM ROUND				
Art.No	M 11016		Weight (gr/m)	1474
Surface area (mm)	primary	103		
	perimeter	427		
Moments of inertia	Ix (cm^4)	13,35		
	Jy (cm^4)	34,45		

O P I

Press corners			"T"-Connectors		
Press corner	110.23196	I	T connector		I
	110.23270	O			O
Screw corner	120.23196	I	Nail		I
	120.23270	O			O
Nailed corner		I	Screw		I
		O			O

Alignment corners		Plastic end covers	
O	I		
180.25260			
180.19000			

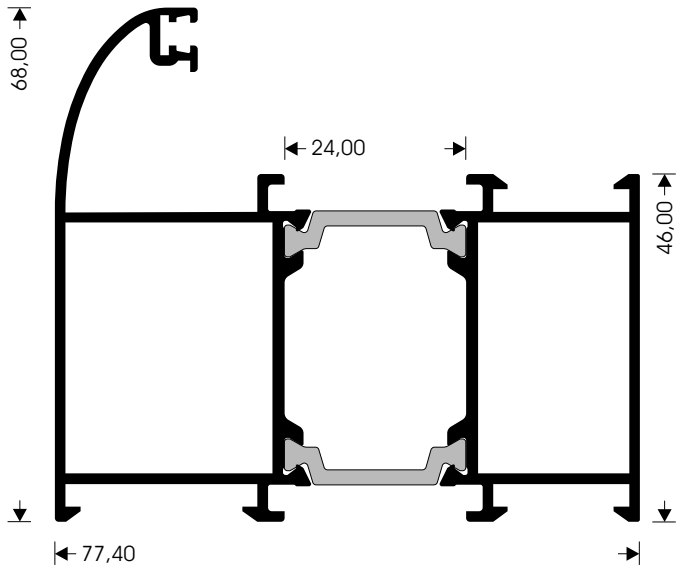

FRAME LARGE ROUND				
Art.No	M 11018		Weight (gr/m)	1636
Surface area (mm)	primary	124		
	perimeter	447		
Moments of inertia	Ix (cm^4)	22,18		
	Jy (cm^4)	39,10		

O P I

Press corners			"T"-Connectors		
Press corner	110.33196	I	T connector		I
	110.33270	O			O
Screw corner	120.33196	I	Nail		I
	120.33270	O			O
Nailed corner		I	Screw		I
		O			O

Alignment corners		Plastic end covers	
O	I		
180.25260			
180.19000			

O Outside part P Polyamide I Inside part

FRAME "CLASSIC"				
Art.No	M 11020		Weight (gr/m)	1495
Surface area (mm)	primary	107		
	perimeter	435		
Moments of inertia	Ix_4 (cm)	14,17		
	Jy (cm^4)	35,54		

O P I

Press corners		
Press corner	110.23196	I
	110.23270	O
Screw corner	120.23196	I
	120.23270	O
Nailed corner		I
		O
Alignment corners		
O	180.25025	I
	180.19000	

"T"-Connectors		
T connector		I
		O
Nail		I
		O
Screw		I
		O
Plastic end covers		

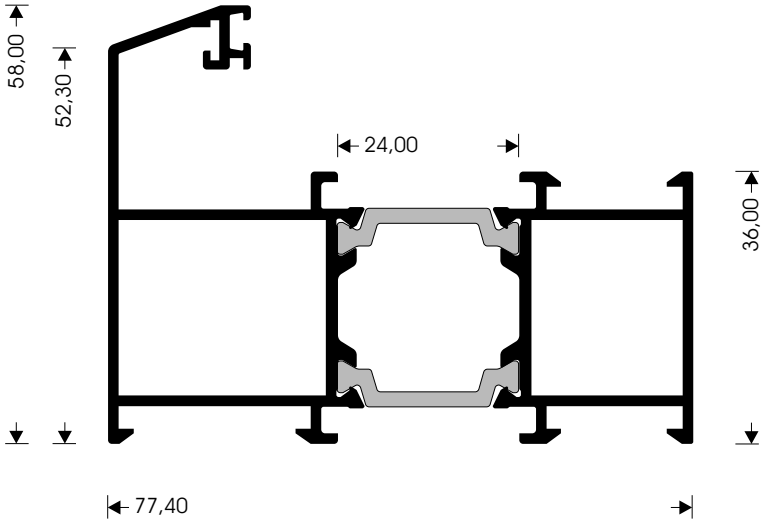

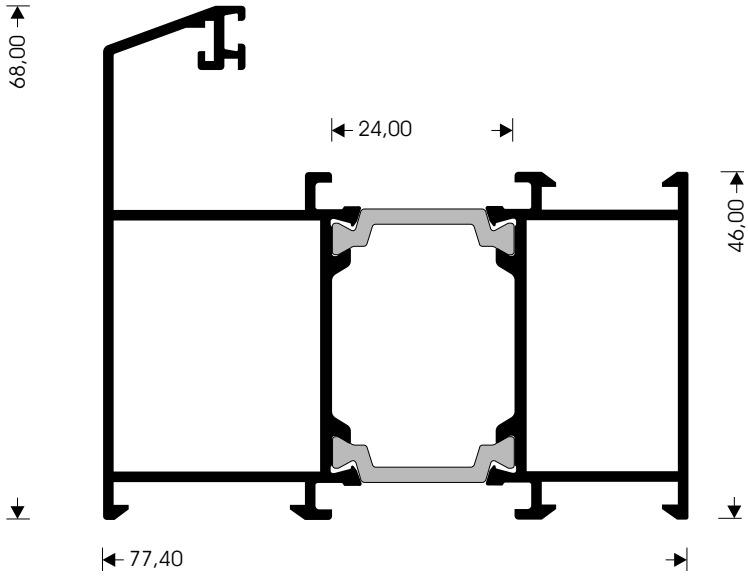

FRAME "CLASSIC"				
Art.No	M 11028		Weight (gr/m)	1656
Surface area (mm)	primary	128		
	perimeter	446		
Moments of inertia	Ix_4 (cm)	23,56		
	Jy (cm^4)	40,02		

O P I

Press corners		
Press corner	110.33196	I
	110.33270	O
Screw corner	120.33196	I
	120.33270	O
Nailed corner		I
		O
Alignment corners		
O	180.25025	I
	180.19000	

"T"-Connectors		
T connector		I
		O
Nail		I
		O
Screw		I
		O
Plastic end covers		

O Outside part P Polyamide I Inside part

FRAME "CLASSIC"				
Art.No	M 11314		Weight (gr/m)	1680
Surface area (mm)	primary	138		
	perimeter	405		
Moments of inertia	Ix (cm^4)	29,99		
	Jy (cm^4)	28,93		

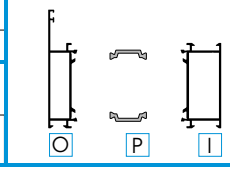

Press corners		
Press corner	110.43196	I
	110.43121	O
Screw corner	120.43196	I
		O
Nailed corner		I
	130.43121	O

Alignment corners	
O	I
180.25010	

"T"-Connectors		
T connector		I
		O
Nail		I
		O
Screw		I
		O

Plastic end covers	

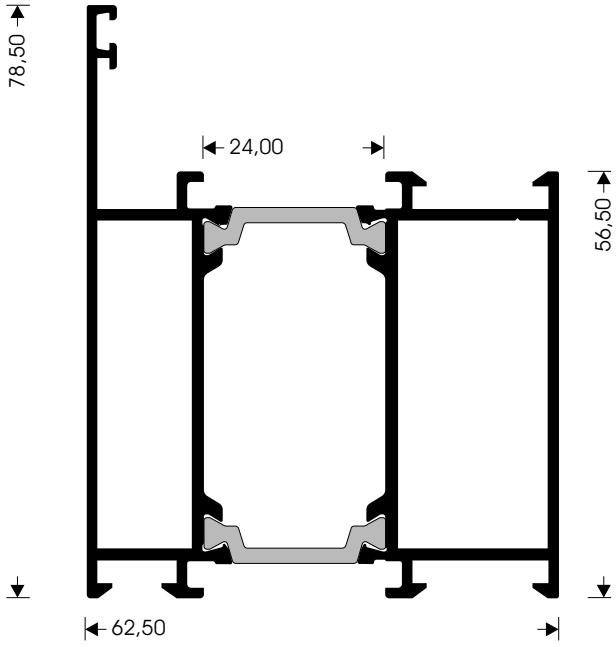

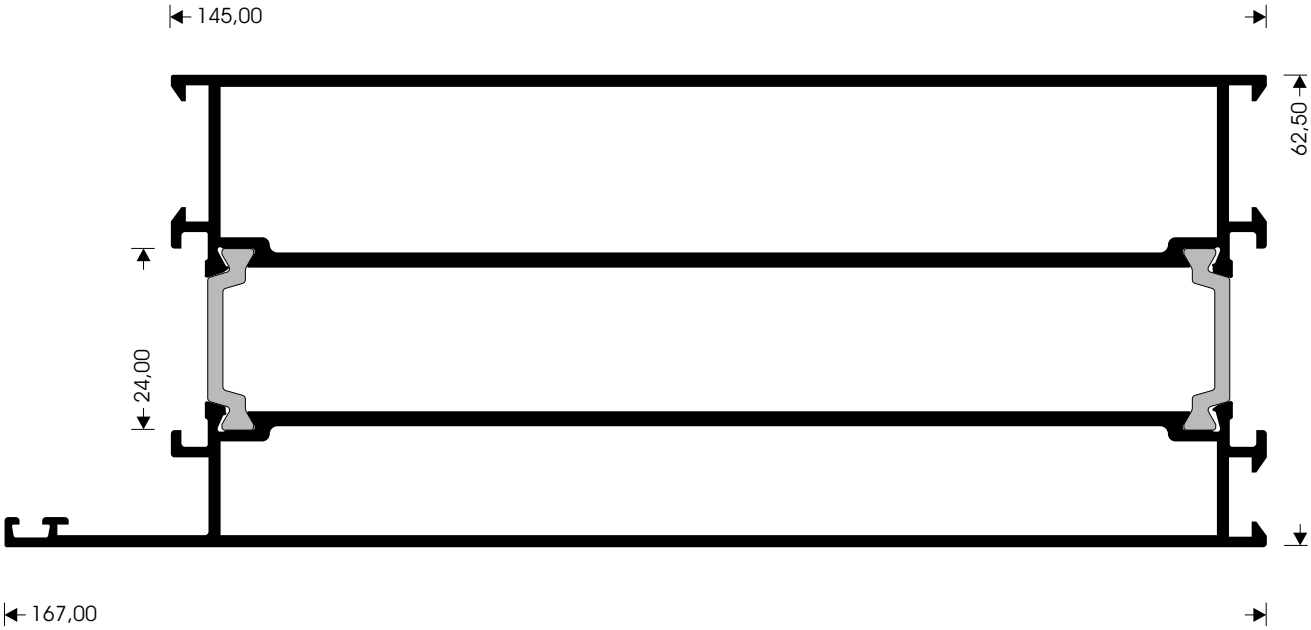

FRAME "CLASSIC"				
Art.No	M 11262		Weight (gr/m)	3515
Surface area (mm)	primary	315		
	perimeter	571		
Moments of inertia	Ix_4 (cm)	335,86		
	Jy (cm^4)	60,63		

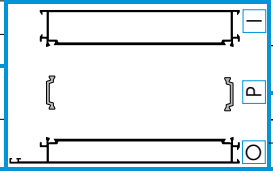

Press corners		
Press corner		I
		O
Screw corner		I
		O
Nailed corner		I
		O

Alignment corners	
O	I
180.25010	

"T"-Connectors		
T connector	160.11213(x2)	I
	160.11813(x2)	O
Nail		I
		O
Screw		I
		O

Plastic end covers	

O Outside part P Polyamide I Inside part

LARGE FRAME WINDOW/SHUTTER				
Art.No	M 11149		Weight (gr/m)	2517
Surface area (mm)	primary	155		
	perimeter	648		
Moments of inertia	Ix_4 (cm)	21,81		
	Jy (cm^4)	324,63		

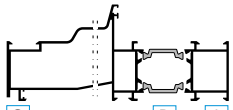

Press corners		
Press corner	110.23196	I
	110.23121	O
Screw corner	120.23196	I
		O
Nailed corner		I
	130.23121	O

Alignment corners		
O	180.25010	I
	180.19000	

"T"-Connectors		
T connector		I
		O
Nail		I
		O
Screw		I
		O

Plastic end covers	

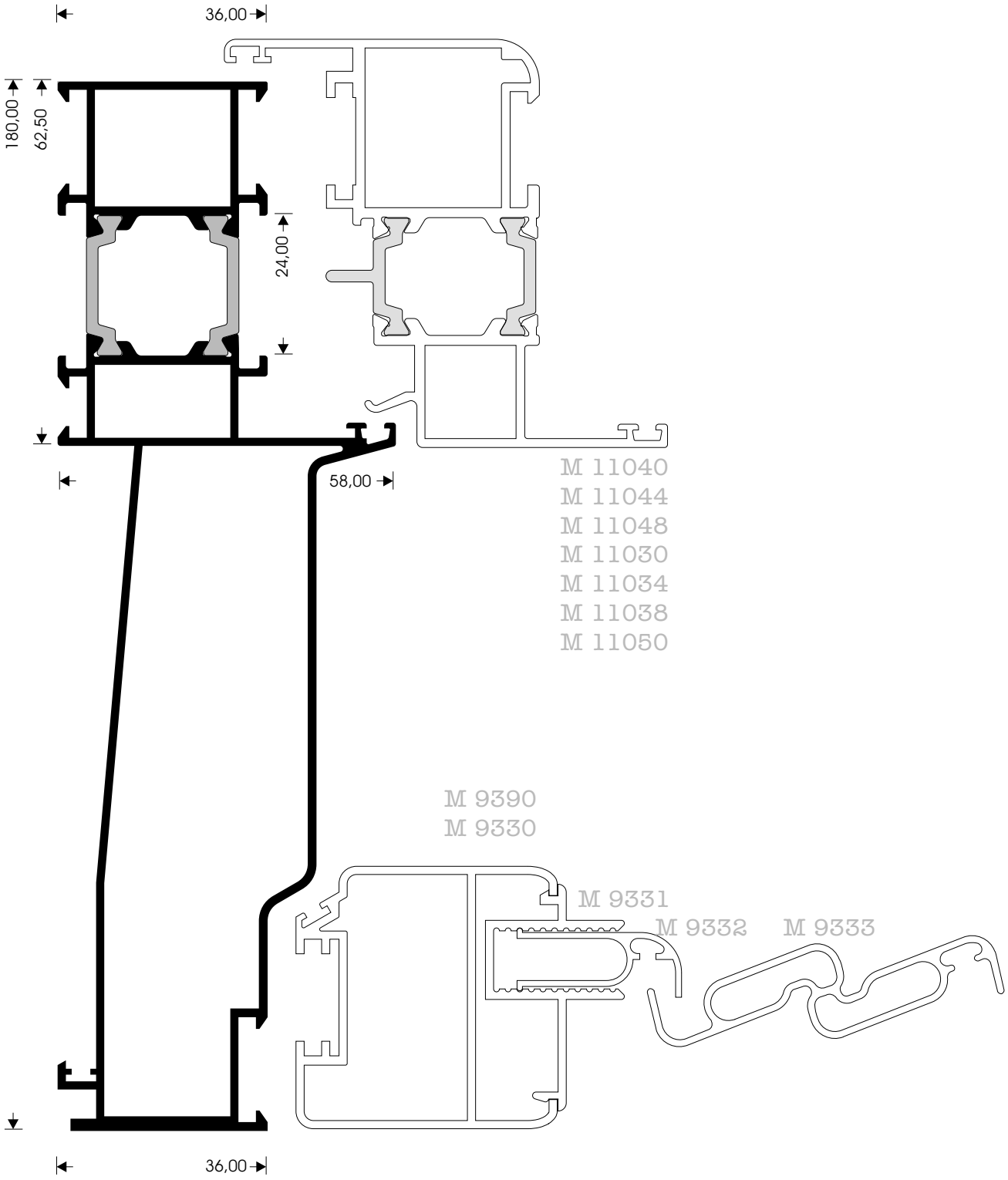

O Outside part P Polyamide I Inside part

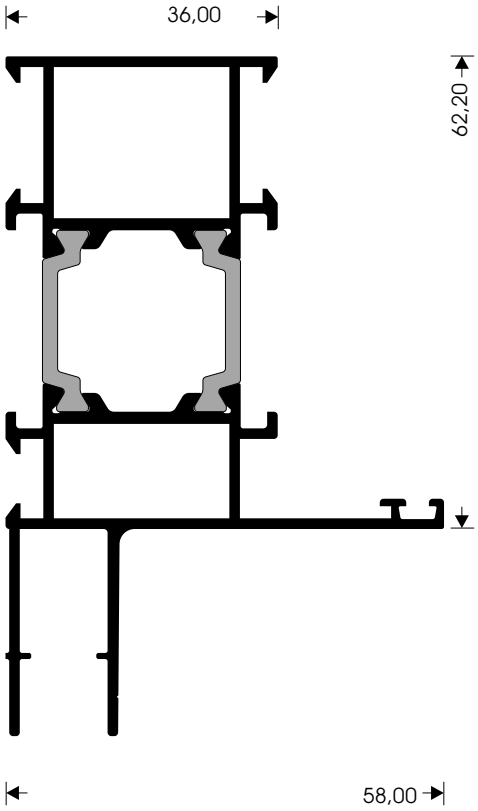

FRAME TWO PIECE				
Art.No	M 11205		Weight (gr/m)	1524
Surface area (mm)	primary	108	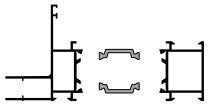	
	perimeter	628		
Moments of inertia	Ix (cm^4)	11,62		
	Jy (cm^4)	34,36	O P I	

Press corners			"T"-Connectors		
Press corner	110.23196	I	T connector		I
	110.23121	O			O
Screw corner	120.23196	I	Nail		I
		O			O
Nailed corner		I	Screw		I
	130.23121	O			O

Alignment corners		Plastic end covers	
O	I		
180.25010			

FRAME TWO PIECE				
Art.No	M 9379		Weight (gr/m)	1446
Surface area (mm)	primary	121	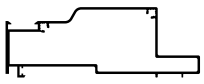	
	perimeter	684		
Moments of inertia	Ix_4 (cm^4)	11,21		
	Jy (cm^4)	78,35	O	

Press corners			"T"-Connectors		
Press corner		I	T connector		I
		O			O
Screw corner		I	Nail		I
		O			O
Nailed corner		I	Screw		I
		O			O

Alignment corners		Plastic end covers	
O	I		
180.19000			

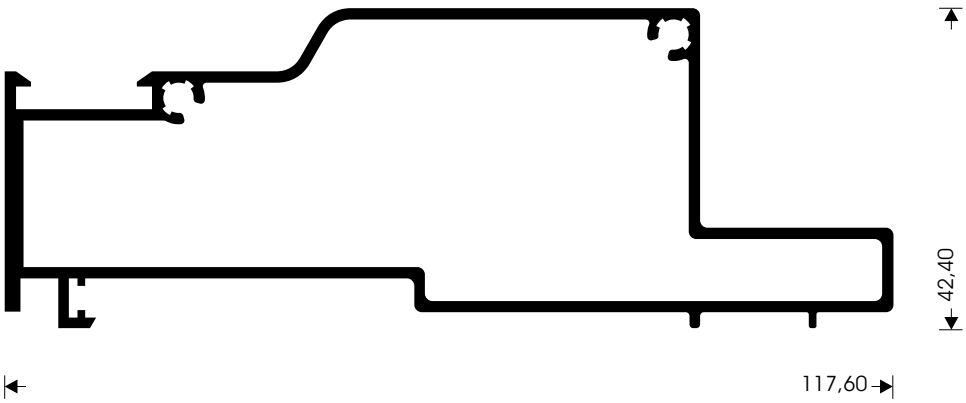

O Outside part P Polyamide I Inside part

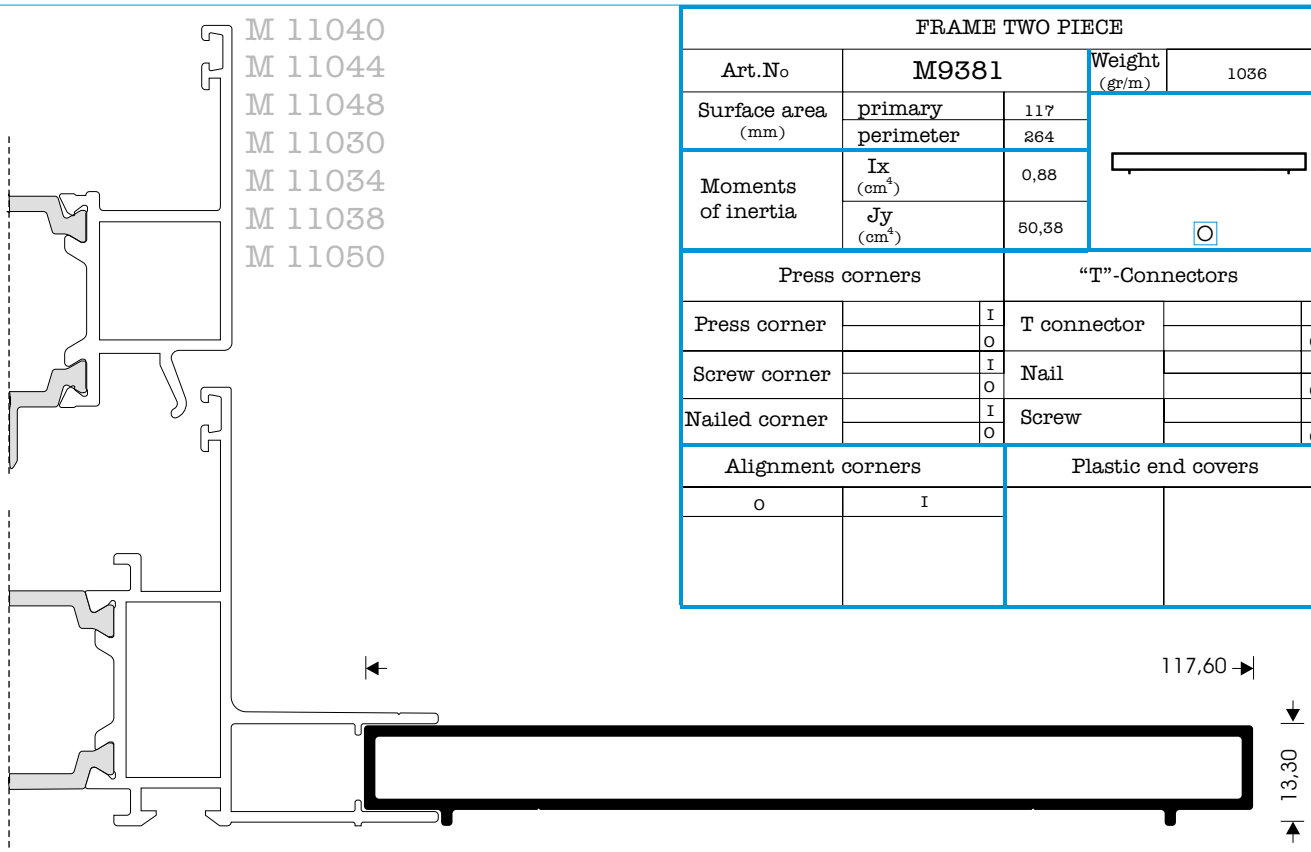

FRAME TWO PIECE				
Art.No	M9381		Weight (gr/m)	1036
Surface area (mm)	primary	117		
	perimeter	264		
Moments of inertia	Ix (cm^4)	0,88		
	Jy (cm^4)	50,38		

Press corners			"T"-Connectors		
Press corner		I	T connector		I
		O			O
Screw corner		I	Nail		I
		O			O
Nailed corner		I	Screw		I
		O			O

Alignment corners		Plastic end covers	
O	I		

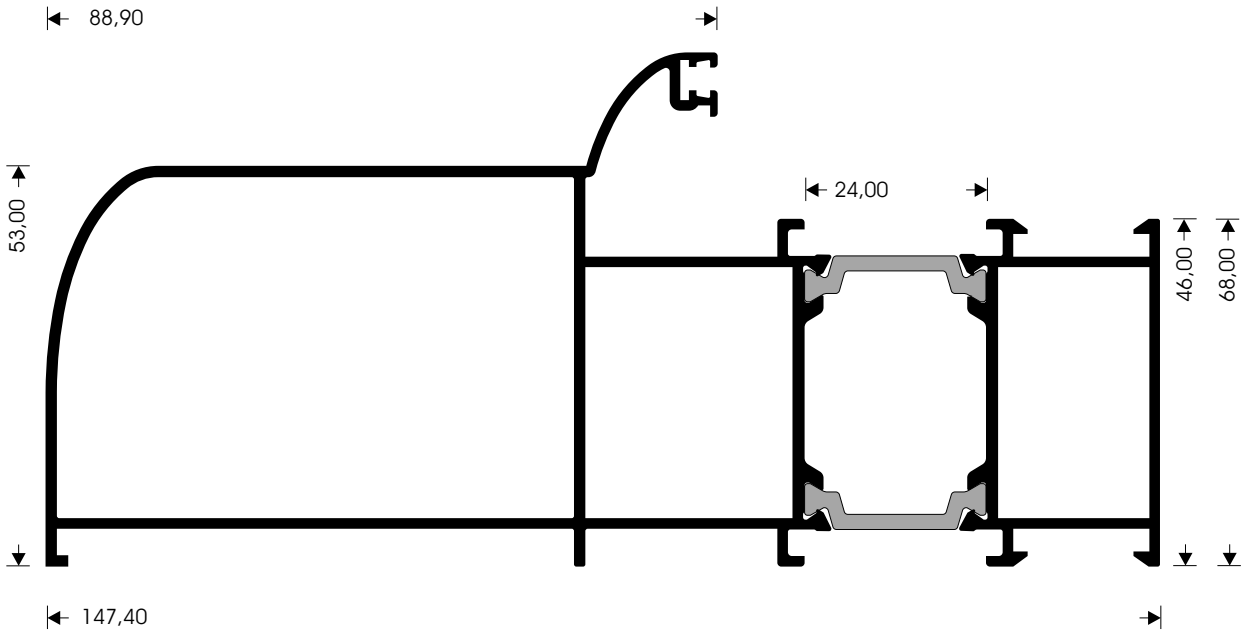

FRAME /COLUMN ROUND				
Art.No	M 11168		Weight (gr/m)	2363
Surface area (mm)	primary	187		
	perimeter	587		
Moments of inertia	Ix_4 (cm)	34,73		
	Jy (cm^4)	178,51		

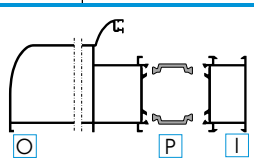

Press corners			"T"-Connectors		
Press corner	110.33196	I	T connector		I
	110.33270	O			O
Screw corner	120.33196	I	Nail		I
	120.33270	O			O
Nailed corner		I	Screw		I
		O			O

Alignment corners			Plastic end covers	
O	180.25260 180.19000	I		

O Outside part P Polyamide I Inside part

FRAME EXPANSION JOINT				
Art.No	M 11076		Weight (gr/m)	1623
Surface area (mm)	primary	121		
	perimeter	456		
Moments of inertia	Ix_4 (cm)	7,70		
	Jy (cm^4)	71,47		

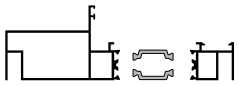

Press corners		
Press corner	110.15102	I
	110.15121	O
Screw corner		I
		O
Nailed corner	130.15102	I
	130.15121	O

Alignment corners	
O	I
180.25010	

"T"-Connectors		
T connector		I
	160.11813	O
Nail		I
	470.11834(x2)	O
Screw		I
		O

Plastic end covers	

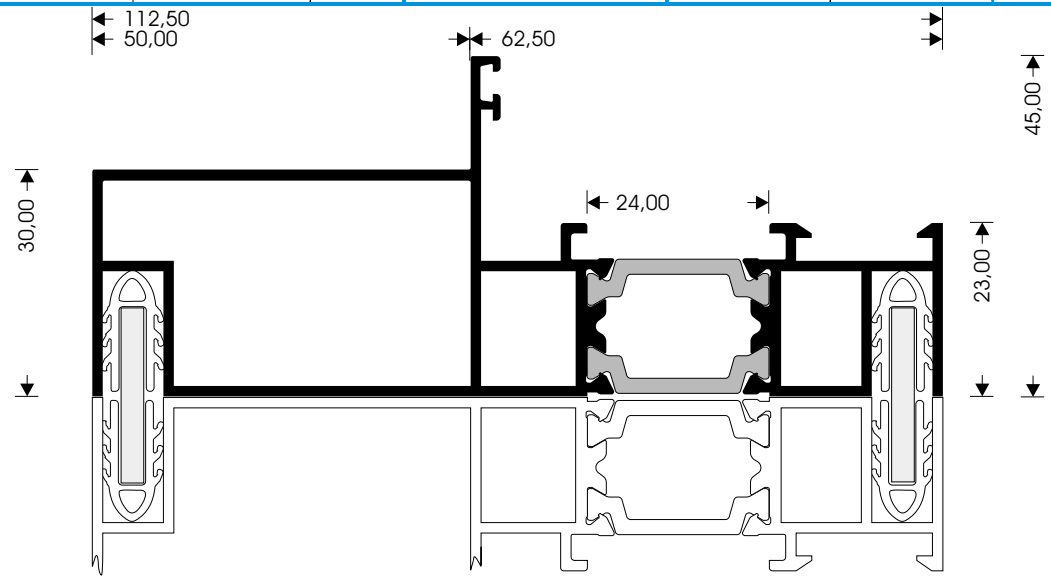

230.00959
Gasket seal(EPDM)

25 x 3

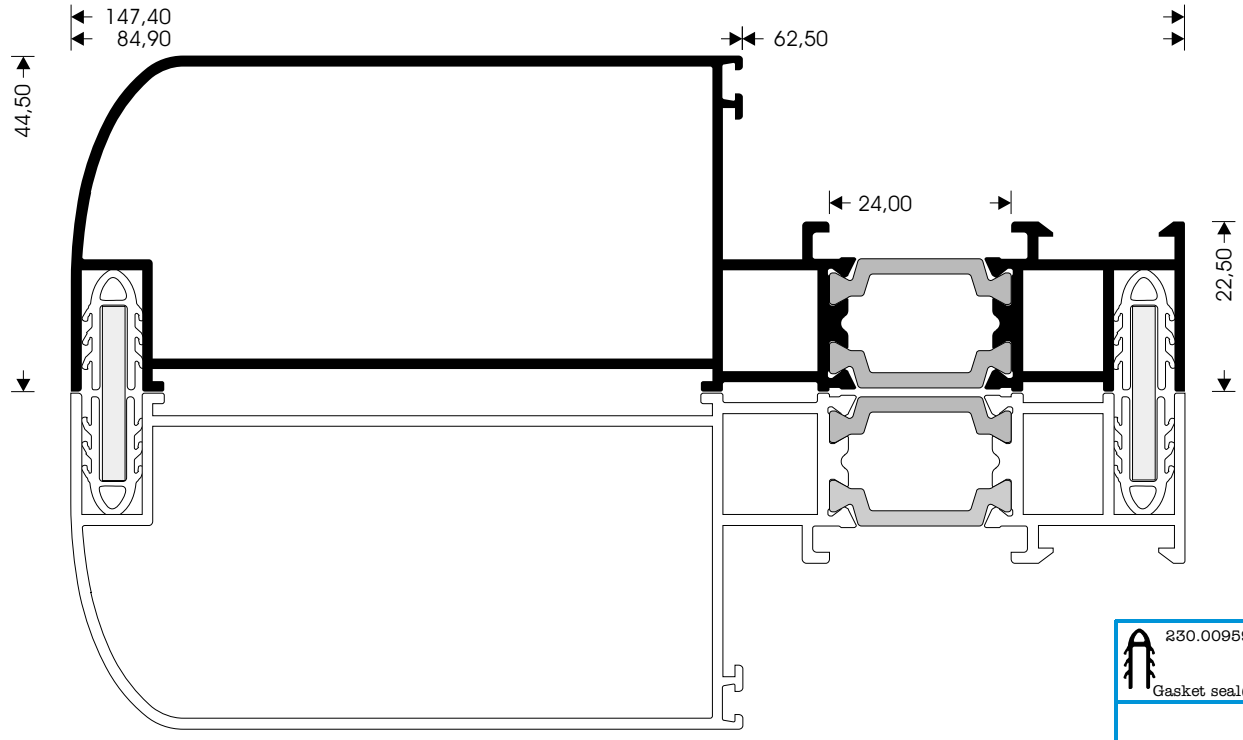

230.00959
Gasket seal(EPDM)

25 x 3

FRAME EXPANSION JOINT				
Art.No	M 11080		Weight (gr/m)	2273
Surface area (mm)	primary	147		
	perimeter	530		
Moments of inertia	Ix_4 (cm)	16,72		
	Jy (cm^4)	158,92		

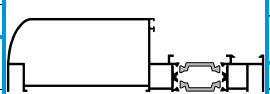

Press corners		
Press corner	110.13101	I
	110.13121	O
Screw corner		I
		O
Nailed corner	130.13101	I
	130.13121	O

Alignment corners	
O	I
180.25010	

"T"-Connectors		
T connector		I
	160.11813	O
Nail		I
	470.11834(x2)	O
Screw		I
		O

Plastic end covers	

O Outside part P Polyamide I Inside part

KICKPLATE				
Art.No	M 11242		Weight (gr/m)	2957
Surface area (mm)	primary	286		
	perimeter	567		
Moments of inertia	Ix_4 (cm)	181,06		
	Jy (cm^4)	58,63		

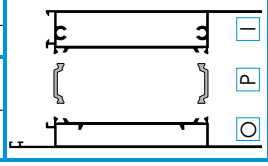

Press corners		
Press corner		I
		O
Screw corner		I
		O
Nailed corner		I
		O

Alignment corners	
O	I

"T"-Connectors		
T connector		I
	160.11813(x 2)	O
Nail		I
	470.11834(x2)	O
Screw	M 5 (x 2)	I
		O

Plastic end covers	

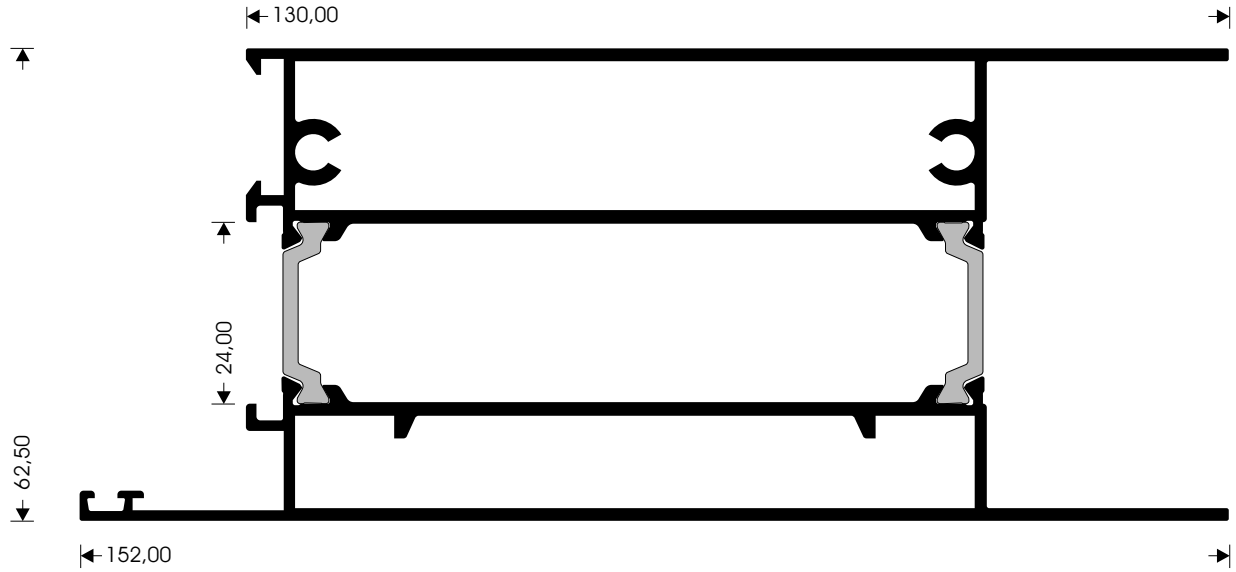

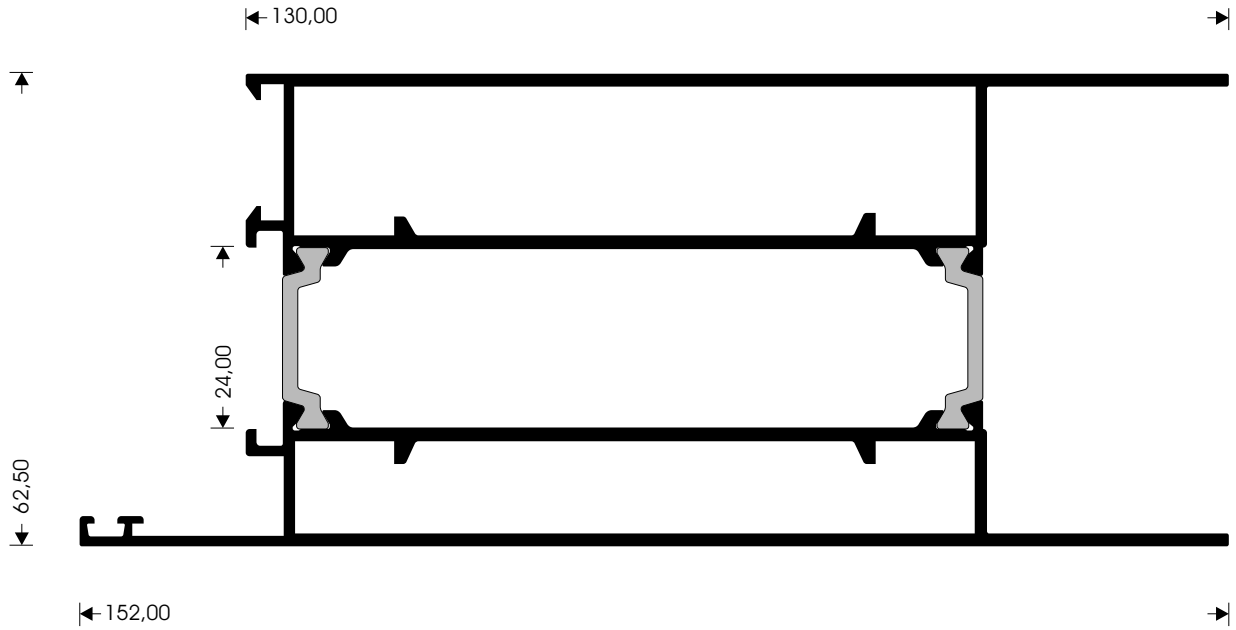

KICKPLATE				
Art.No	M 11142		Weight (gr/m)	2827
Surface area (mm)	primary	286		
	perimeter	527		
Moments of inertia	Ix_4 (cm)	156,44		
	Jy (cm^4)	55,23		

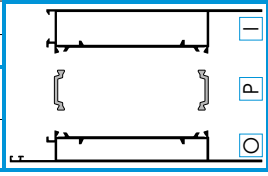

Press corners		
Press corner		I
		O
Screw corner		I
		O
Nailed corner		I
		O

Alignment corners	
O	I

"T"-Connector		
T connector	160.11213(x2)	I
	160.11813(x2)	O
Nail	470.11834(x2)	I
	470.11834(x2)	O
Screw		I
		O

Plastic end covers	

O Outside part P Polyamide I Inside part

KICKPLATE				
Art.No	M 11342		Weight (gr/m)	2594
Surface area (mm)	primary	256		
	perimeter	526		
Moments of inertia	Ix_4 (cm)	118,61		
	Jy (cm^4)	50,94		

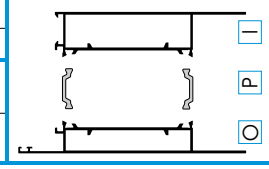

Press corners		
Press corner		I
		O
Screw corner		I
		O
Nailed corner		I
		O

Alignment corners	
O	I

"T"-Connectors		
T connector	160.11213(x2)	I
	160.11813(x2)	O
Nail	470.11834(x2)	I
	470.11834(x2)	O
Screw		I
		O

Plastic end covers	

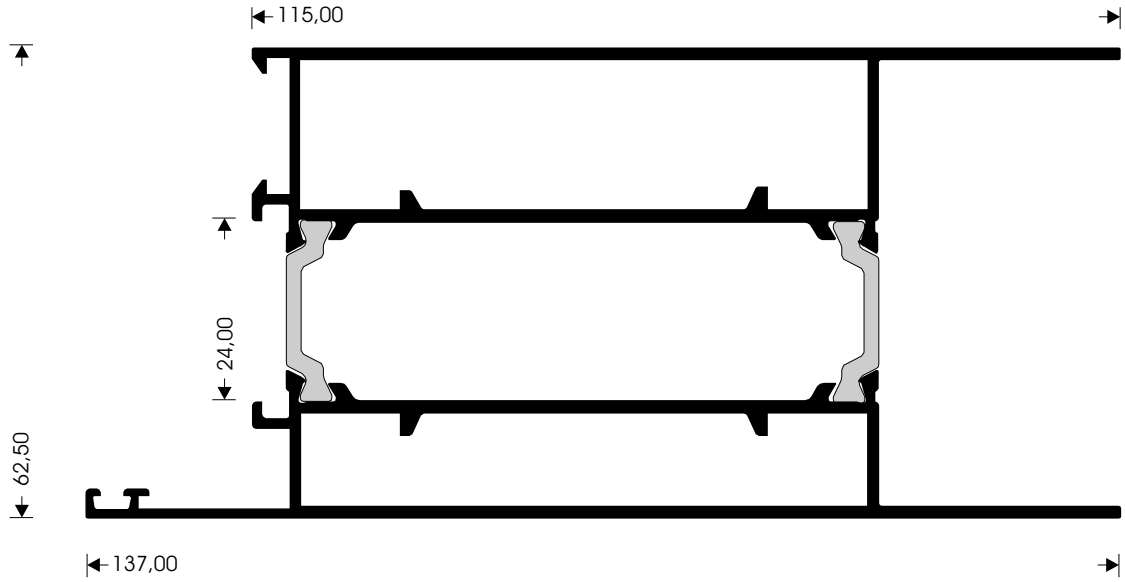

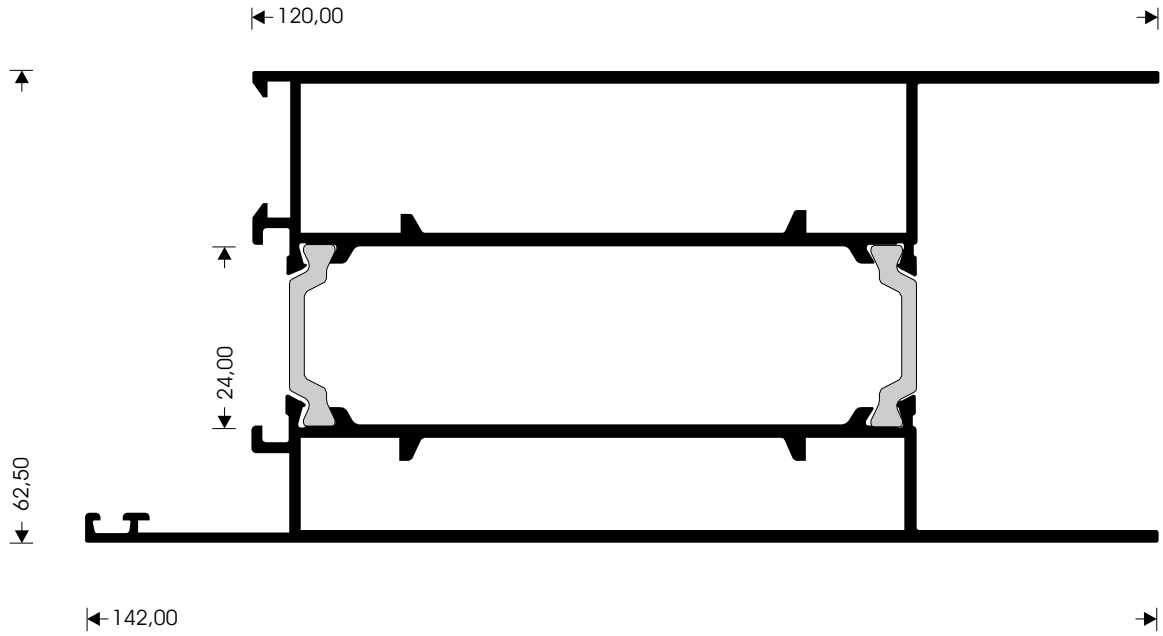

KICKPLATE				
Art.No	M 11442		Weight (gr/m)	2688
Surface area (mm)	primary	266		
	perimeter	536		
Moments of inertia	Ix (cm^4)	134,97		
	Jy (cm^4)	52,83		

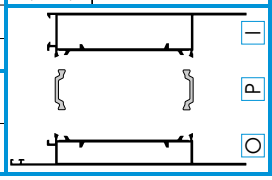

Press corners		
Press corner		I
		O
Screw corner		I
		O
Nailed corner		I
		O

Alignment corners	
O	I

"T"-Connector		
T connector	160.11213(x2)	I
	160.11813(x2)	O
Nail	470.11834(x2)	I
	470.11834(x2)	O
Screw		I
		O

Plastic end covers	

O Outside part P Polyamide I Inside part

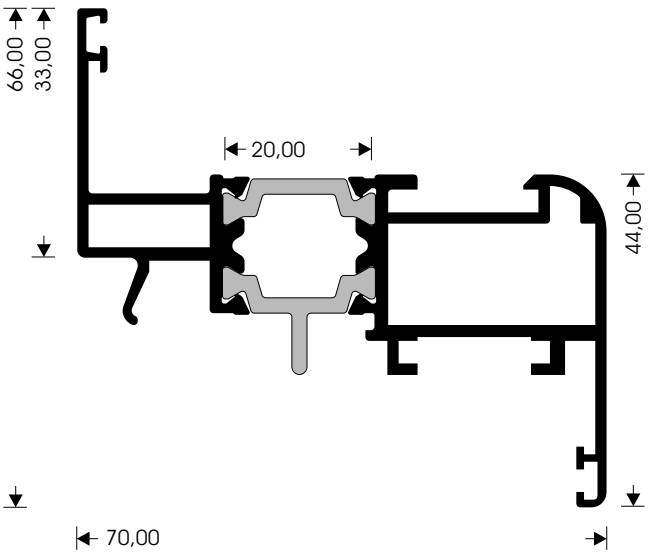

SASH SMALL FLAT				
Art.No	M 11030		Weight (gr/m)	1387
Surface area (mm)	primary	88		
	perimeter	405		
Moments of inertia	Ix (cm^4)	7,43		
	Jy (cm^4)	27,58		

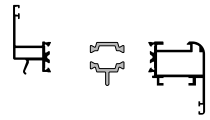

Press corners			"T"-Connectors		
Press corner	110.13270	I	T connector		I
	110.05156	O			O
Screw corner	120.13270	I	Nail		I
		O			O
Nailed corner		I	Screw		I
	130.05156	O			O

Alignment corners		Plastic end covers	
O	I		
180.25150	180.20010		

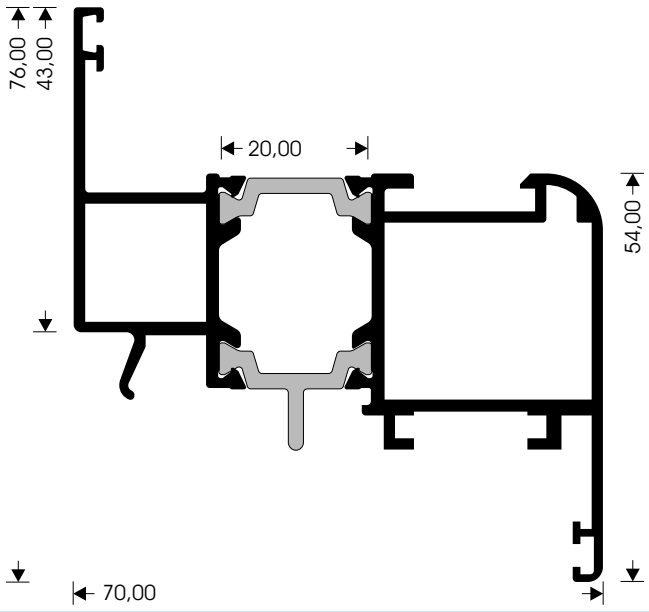

SASH MEDIUM FLAT				
Art.No	M 11034		Weight (gr/m)	1600
Surface area (mm)	primary	108		
	perimeter	425		
Moments of inertia	Ix (cm^4)	14,12		
	Jy (cm^4)	31,60		

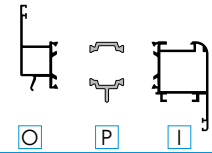

Press corners			"T"-Connectors		
Press corner	110.23270	I	T connector		I
	110.15156	O			O
Screw corner	120.23270	I	Nail		I
		O			O
Nailed corner		I	Screw		I
	130.15156	O			O

Alignment corners		Plastic end covers	
O	I		
180.25150	180.20010		

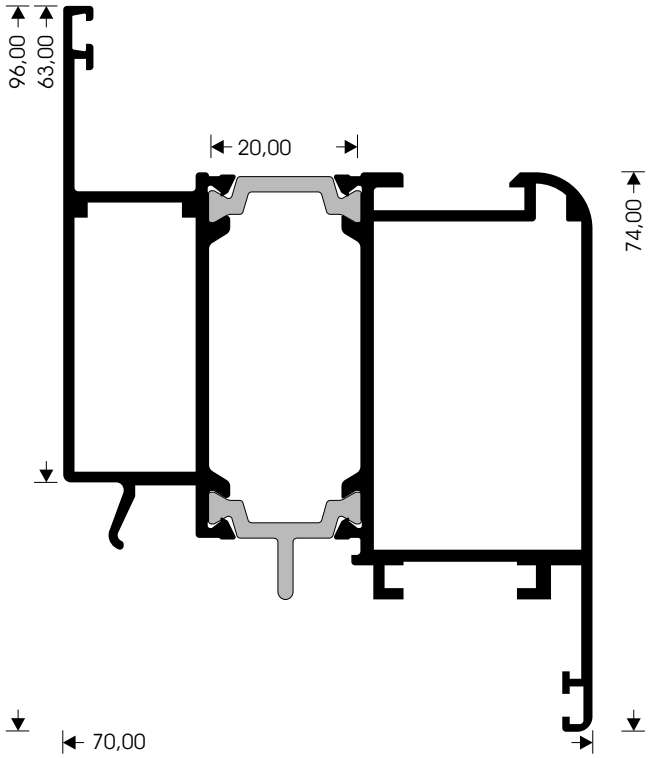

SASH LARGE FLAT				
Art.No	M 11038		Weight (gr/m)	1919
Surface area (mm)	primary	148		
	perimeter	465		
Moments of inertia	Ix (cm^4)	38,25		
	Jy (cm^4)	40,55		

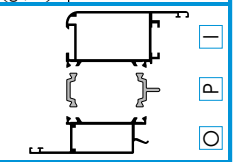

Press corners			"T"-Connectors		
Press corner	110.43270	I	T connector		I
	110.33156	O			O
Screw corner	120.43270	I	Nail		I
		O			O
Nailed corner		I	Screw		I
	130.33156	O			O

Alignment corners		Plastic end covers	
O	I		
180.25150	180.20010		

O Outside part P Polyamide I Inside part

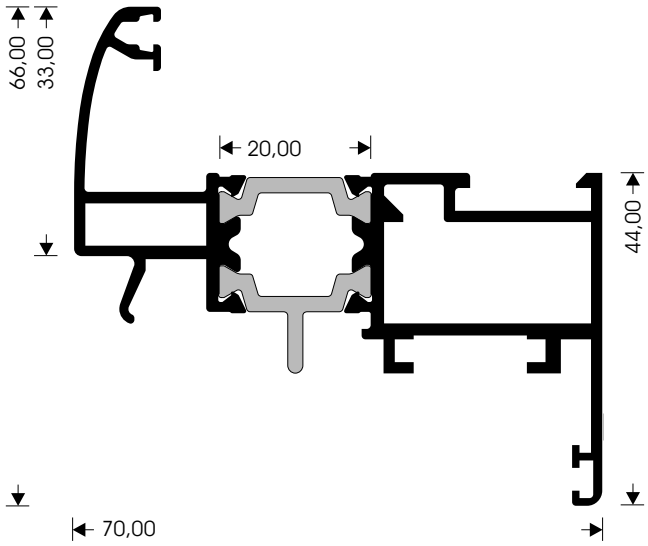

SASH SMALL ROUND				
Art.No	M 11040		Weight (gr/m)	1424
Surface area (mm)	primary	83		
	perimeter	419		
Moments of inertia	Ix (cm⁴)	8,48		
	Jy (cm⁴)	27,66		

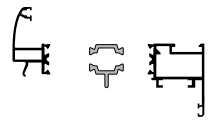

Press corners			"T"-Connectors		
Press corner	110.13270	I	T connector		I
	110.05156	O			O
Screw corner	120.13270	I	Nail		I
		O			O
Nailed corner		I	Screw		I
	130.05156	O			O

Alignment corners		Plastic end covers	
O	I		
180.25017	180.20010		

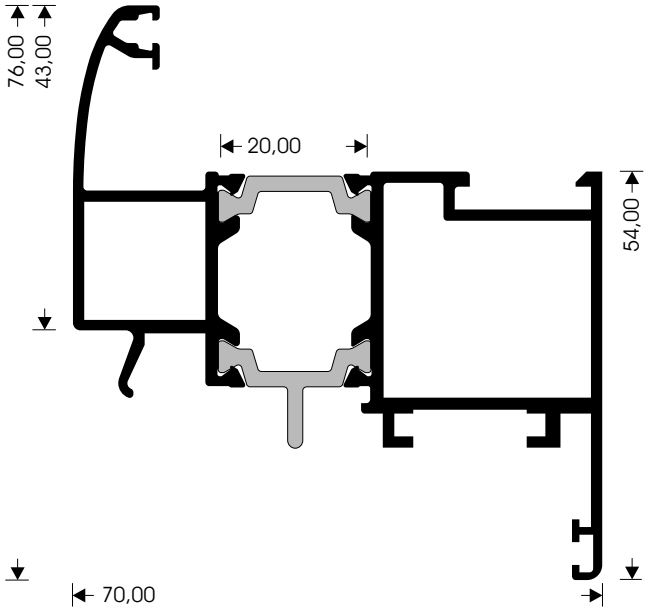

SASH MEDIUM ROUND				
Art.No	M 11044		Weight (gr/m)	1578
Surface area (mm)	primary	106		
	perimeter	439		
Moments of inertia	Ix (cm⁴)	15,54		
	Jy (cm⁴)	31,64		

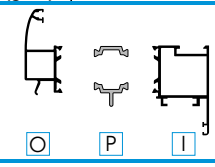

Press corners			"T"-Connectors		
Press corner	110.23270	I	T connector		I
	110.15156	O			O
Screw corner	120.23270	I	Nail		I
		O			O
Nailed corner		I	Screw		I
	130.15156	O			O

Alignment corners		Plastic end covers	
O	I		
180.25017	180.20010		

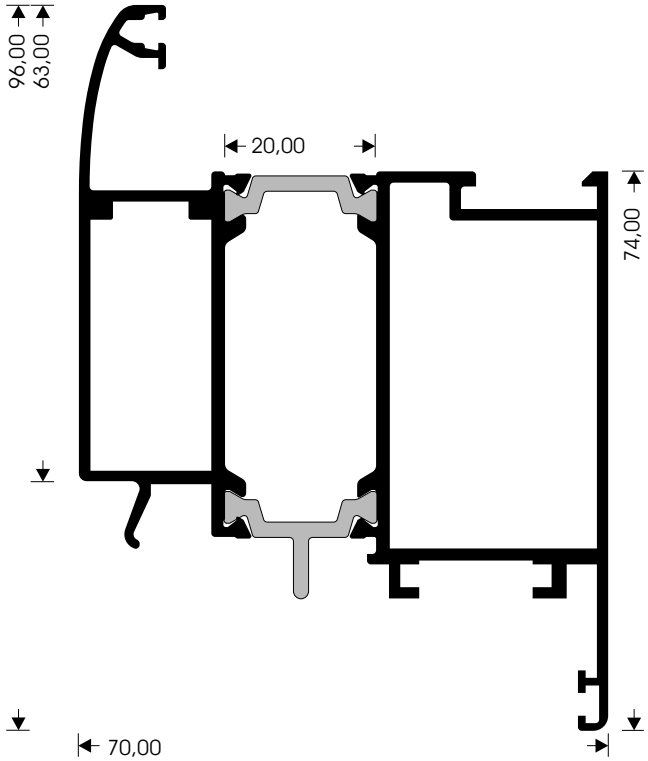

SASH LARGE ROUND				
Art.No	M 11048		Weight (gr/m)	1979
Surface area (mm)	primary	143		
	perimeter	479		
Moments of inertia	Ix (cm⁴)	40,54		
	Jy (cm⁴)	40,64		

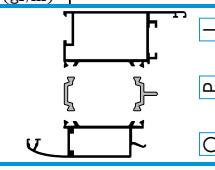

Press corners			"T"-Connectors		
Press corner	110.43270	I	T connector		I
	110.33156	O			O
Screw corner	120.43270	I	Nail		I
		O			O
Nailed corner		I	Screw		I
	130.33156	O			O

Alignment corners		Plastic end covers	
O	I		
180.25017	180.20010		

O Outside part P Polyamide I Inside part

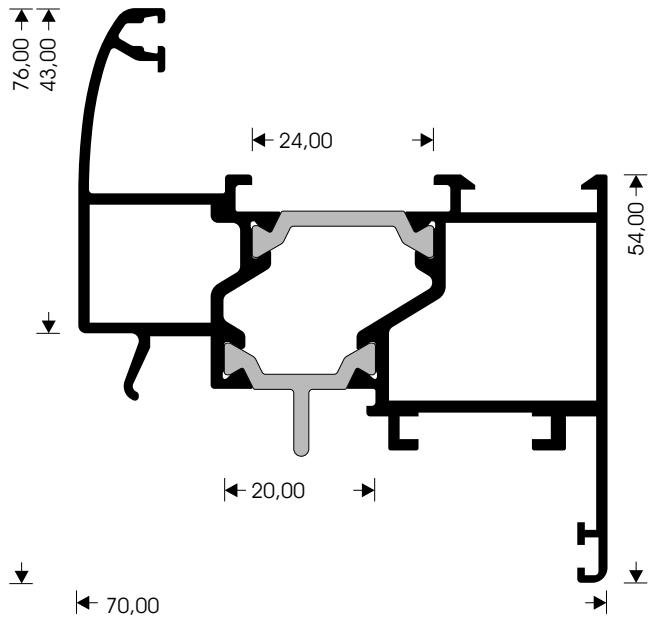

SASH-FRAME ROUND				
Art.No	M 11244		Weight (gr/m)	1559
Surface area (mm)	primary	103		
	perimeter	455		
Moments of inertia	Ix (cm⁴)	14,54		
	Jy (cm⁴)	31,73		

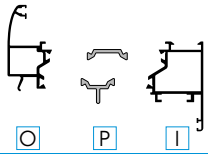

Press corners			"T"-Connectors		
Press corner	110.23196	I	T connector		I
	110.15156	O			O
Screw corner	120.23196	I	Nail		I
		O			O
Nailed corner		I	Screw		I
	130.15156	O			O

Alignment corners		Plastic end covers	
O	I		
	180.20010		

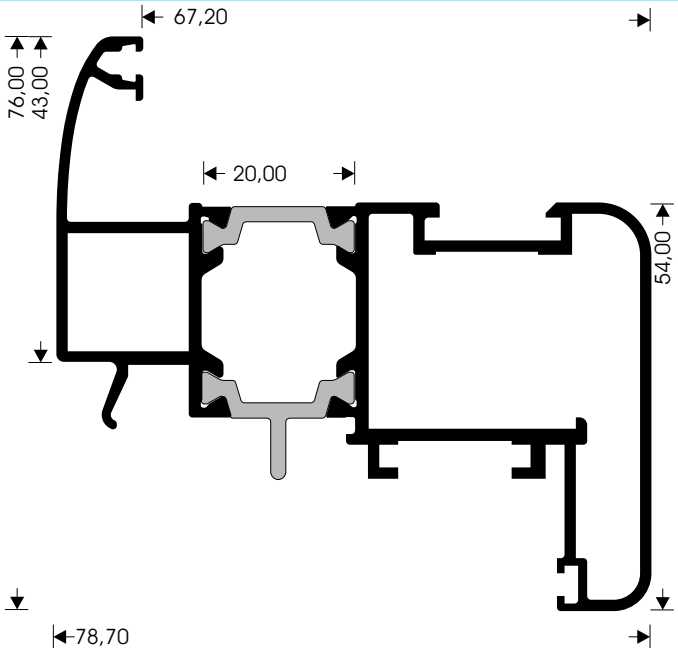

SASH ROUND				
Art.No	M 11216		Weight (gr/m)	1754
Surface area (mm)	primary	114		
	perimeter	457		
Moments of inertia	Ix (cm⁴)	19,88		
	Jy (cm⁴)	43,72		

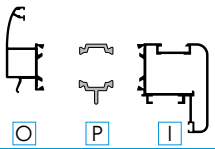

Press corners			"T"-Connectors		
Press corner	110.23270	I	T connector		I
	110.15156	O			O
Screw corner	120.23270	I	Nail		I
		O			O
Nailed corner		I	Screw		I
	130.15156	O			O

Alignment corners		Plastic end covers	
O	I		
180.25017			

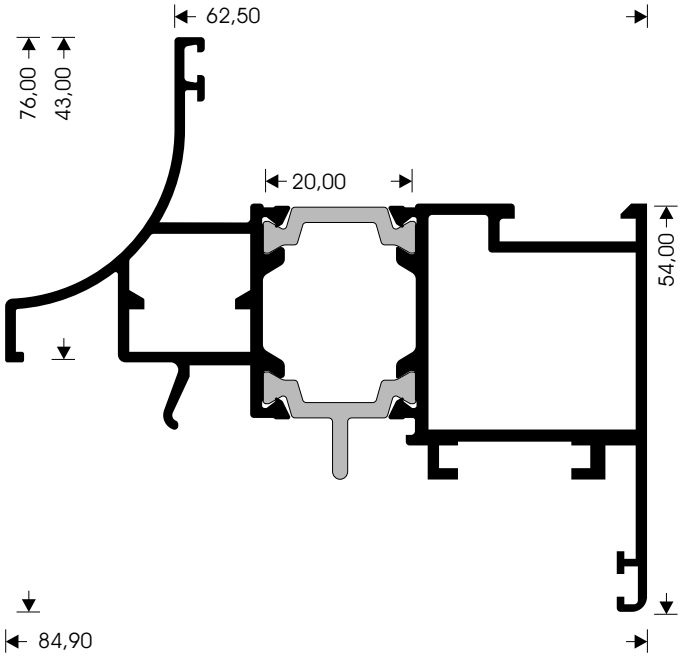

SASH "CLASSIC"				
Art.No	M 11050		Weight (gr/m)	1649
Surface area (mm)	primary	115		
	perimeter	470		
Moments of inertia	Ix (cm⁴)	14,14		
	Jy (cm⁴)	36,18		

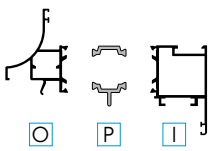

Press corners			"T"-Connectors		
Press corner	110.23270	I	T connector		I
	110.05156	O			O
Screw corner	120.23270	I	Nail		I
		O			O
Nailed corner		I	Screw		I
	130.05156	O			O

Alignment corners		Plastic end covers	
O	I		
180.25008	180.20010		

O Outside part P Polyamide I Inside part

SASH "CLASSIC"			Weight (gr/m)	1825
Art.No	M 11217			
Surface area (mm)	primary	125		
	perimeter	488		
Moments of inertia	Ix_4 (cm)	18,38		
	Jy (cm^4)	49,13		

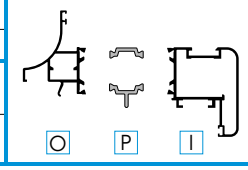

Press corners			"T"-Connectors		
Press corner	110.23270	I	T connector		I
	110.05156	O			O
Screw corner	120.23270	I	Nail		I
		O			O
Nailed corner		I	Screw		I
	130.05156	O			O
Alignment corners			Plastic end covers		
O	I				
180.25008					

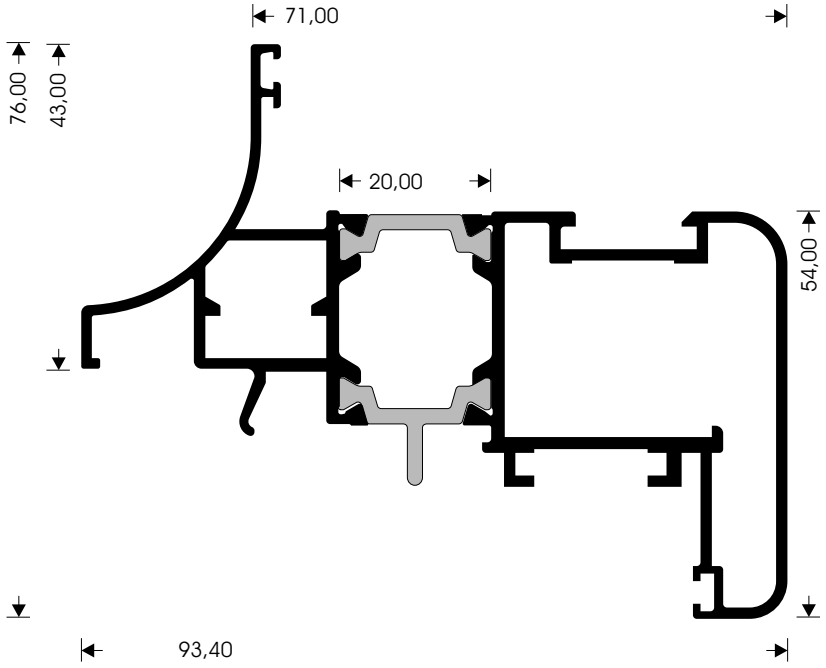

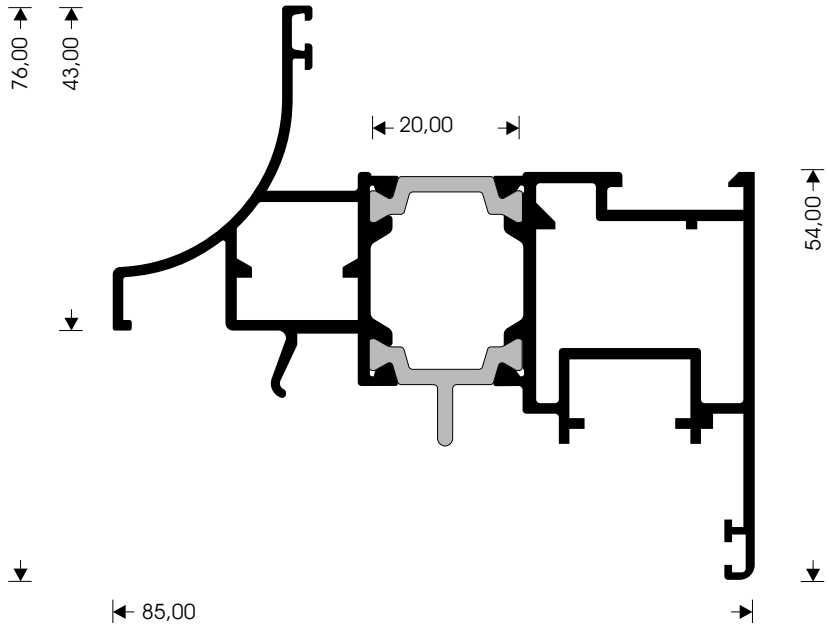

SASH SMALL "CLASSIC"			Weight (gr/m)	1685
Art.No	M 11370			
Surface area (mm)	primary	113		
	perimeter	477		
Moments of inertia	Ix_4 (cm)	13,66		
	Jy (cm^4)	36,60		

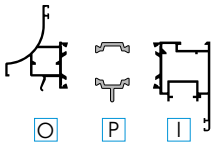

Press corners			"T"-Connectors		
Press corner	110.15300	I	T connector		I
	110.05156	O			O
Screw corner		I	Nail		I
		O			O
Nailed corner		I	Screw		I
		O			O
Alignment corners			Plastic end covers		
O	I				
180.25008	180.20010				

O Outside part P Polyamide I Inside part

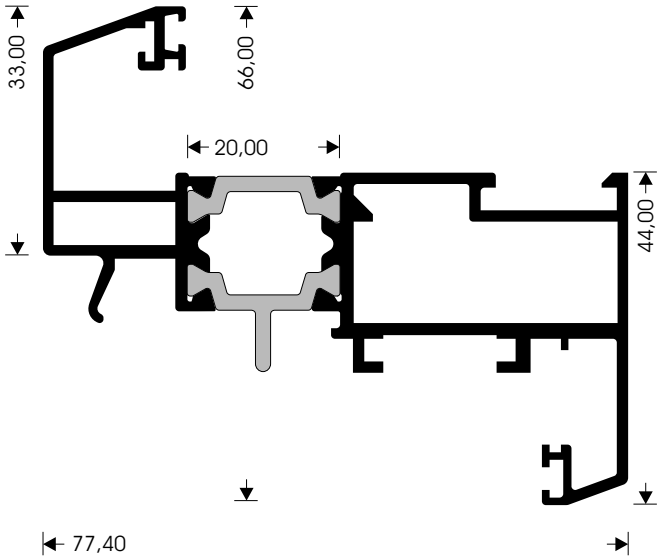

SASH SMALL "PVC-LOOK"

Art.No	M 11320		Weight (gr/m)	1592
Surface area (mm)	primary	100		
	perimeter	487		
Moments of inertia	Ix (cm⁴)	11,82		
	Jy (cm⁴)	37,52		

O P I

Press corners			"T"-Connectors		
Press corner	110.13345	I	T connector		I
	110.05156	O			O
Screw corner	120.13345	I	Nail		I
		O			O
Nailed corner		I	Screw		I
	130.05156	O			O

Alignment corners		Plastic end covers	
O	I		
180.19000	180.20010		
180.25016	180.20006		

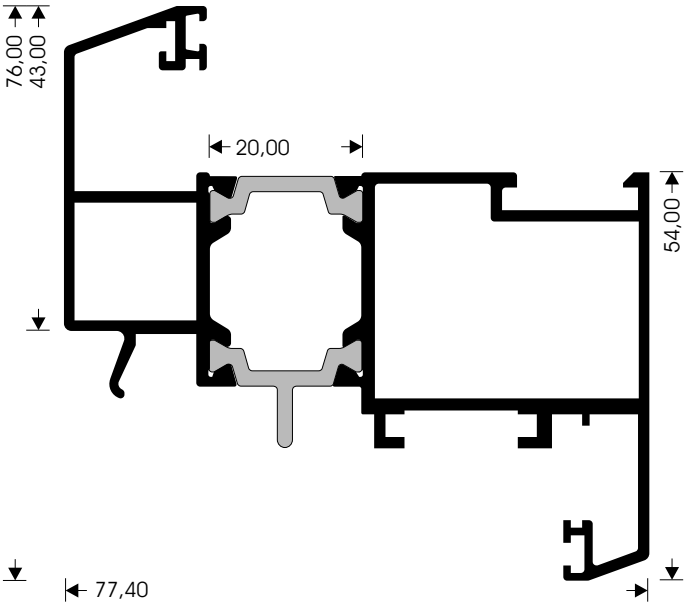

SASH MEDIUM "PVC-LOOK"

Art.No	M 11324		Weight (gr/m)	1746
Surface area (mm)	primary	115		
	perimeter	507		
Moments of inertia	Ix (cm⁴)	20,44		
	Jy (cm⁴)	42,65		

O P I

Press corners			"T"-Connectors		
Press corner	110.23345	I	T connector		I
	110.15156	O			O
Screw corner	120.23345	I	Nail		I
		O			O
Nailed corner		I	Screw		I
	130.15156	O			O

Alignment corners		Plastic end covers	
O	I		
180.19000	180.20010		
180.25016	180.20006		

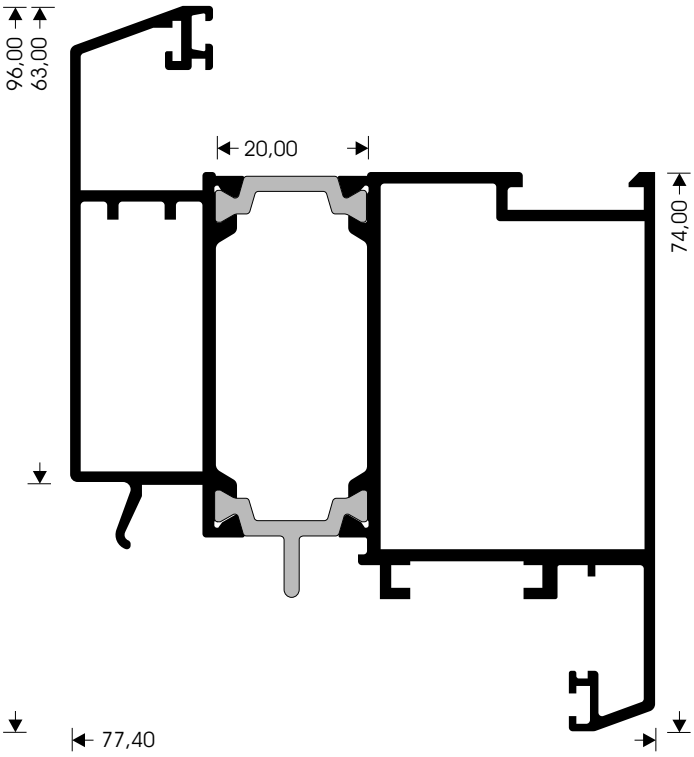

SASH LARGE "PVC-LOOK"

Art.No	M 11328		Weight (gr/m)	2096
Surface area (mm)	primary	156		
	perimeter	547		
Moments of inertia	Ix (cm⁴)	48,91		
	Jy (cm⁴)	52,16		

O P I

Press corners			"T"-Connectors		
Press corner	110.43345	I	T connector		I
	110.33156	O			O
Screw corner	120.43345	I	Nail		I
		O			O
Nailed corner		I	Screw		I
	130.33156	O			O

Alignment corners		Plastic end covers	
O	I		
180.19000	180.20010		
180.25016	180.20006		

O Outside part P Polyamide I Inside part

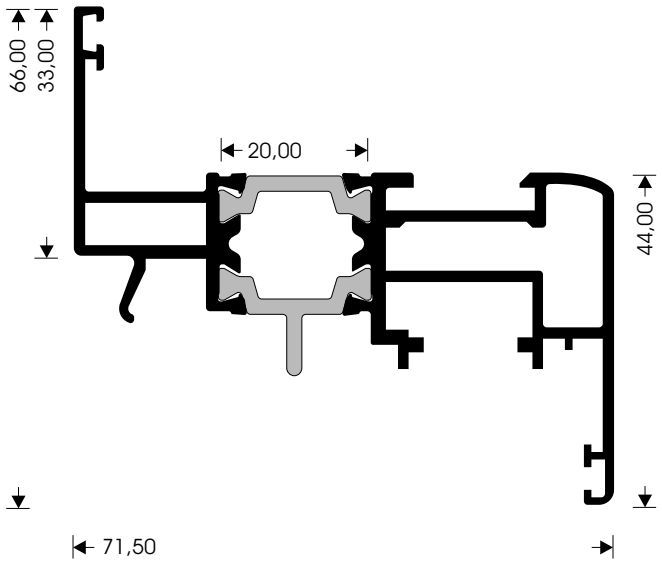

SASH SMALL FLAT				
Art.No	M 11350		Weight (gr/m)	1423
Surface area (mm)	primary	86	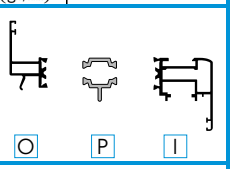	
	perimeter	426		
Moments of inertia	Ix (cm⁴)	7,08		
	Jy (cm⁴)	28,67	O P I	

Press corners			"T"-Connectors		
Press corner	110.05283	I	T connector		I
	110.05156	O			O
Screw corner		I	Nail		I
		O			O
Nailed corner		I	Screw		I
		O			O

Alignment corners		Plastic end covers	
O	I		
180.25150	180.20010		

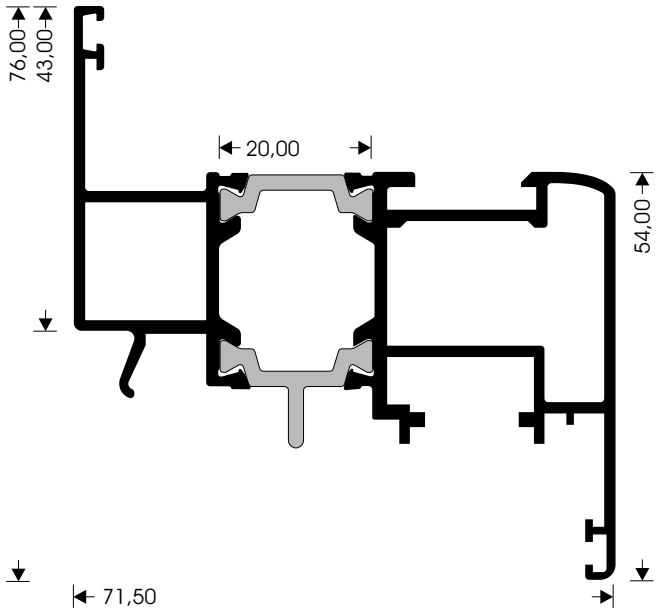

SASH MEDIUM FLAT				
Art.No	M 11354		Weight (gr/m)	1594
Surface area (mm)	primary	107	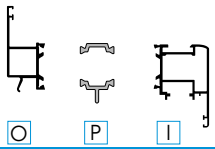	
	perimeter	446		
Moments of inertia	Ix (cm⁴)	13,59		
	Jy (cm⁴)	32,96	O P I	

Press corners			"T"-Connectors		
Press corner	110.15283	I	T connector		I
	110.15156	O			O
Screw corner		I	Nail		I
		O			O
Nailed corner		I	Screw		I
		O			O

Alignment corners		Plastic end covers	
O	I		
180.25150	180.20010		

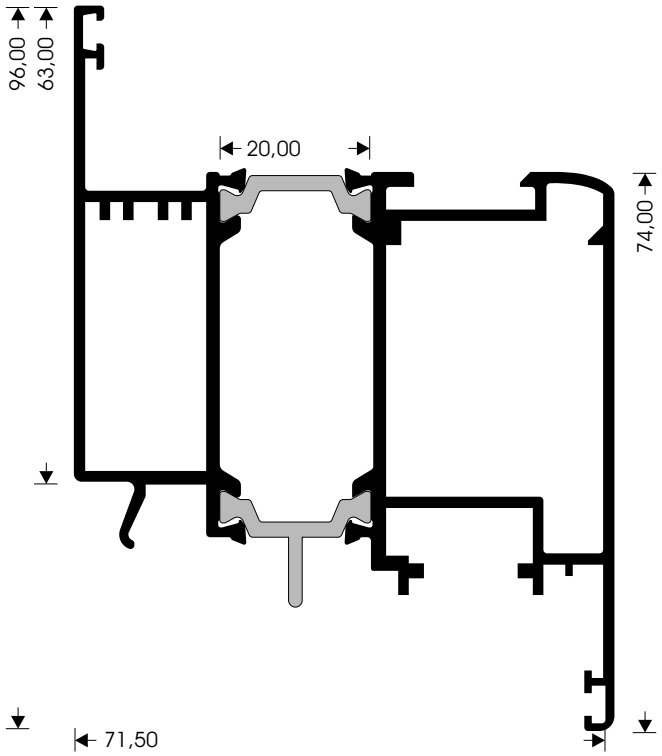

SASH LARGE FLAT				
Art.No	M 11358		Weight (gr/m)	1999
Surface area (mm)	primary	146	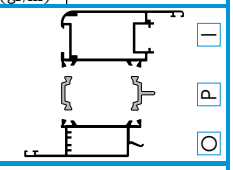	
	perimeter	486		
Moments of inertia	Ix (cm⁴)	37,49		
	Jy (cm⁴)	42,60	O P O	

Press corners			"T"-Connectors		
Press corner	110.33283	I	T connector		I
	110.33156	O			O
Screw corner		I	Nail		I
		O			O
Nailed corner		I	Screw		I
		O			O

Alignment corners		Plastic end covers	
O	I		
180.25150	180.20010		

O Outside part P Polyamide I Inside part

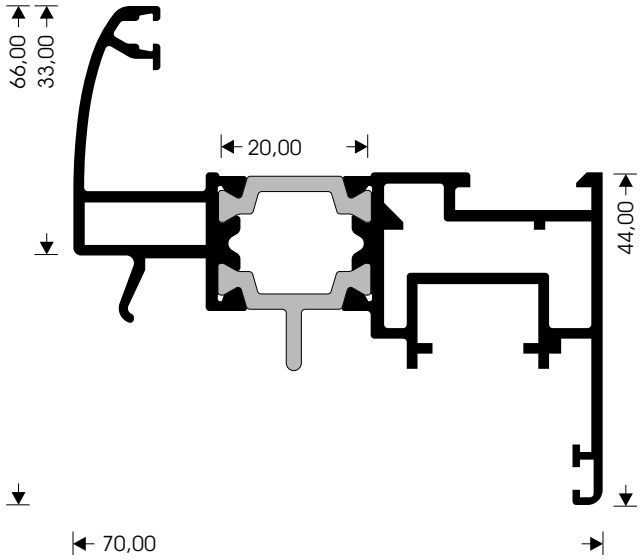

SASH SMALL ROUND				
Art.No	M 11340		Weight (gr/m)	1444
Surface area (mm)	primary	85		
	perimeter	426		
Moments of inertia	Ix (cm^4)	8,10		
	Jy (cm^4)	27,97		

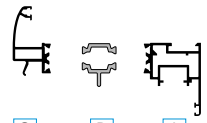

Press corners			"T"-Connectors	
Press corner	110.05300	I	T connector	I
	110.05156	O		O
Screw corner		I	Nail	I
		O		O
Nailed corner		I	Screw	I
		O		O

Alignment corners		Plastic end covers	
O	I		
180.25017	180.20010		

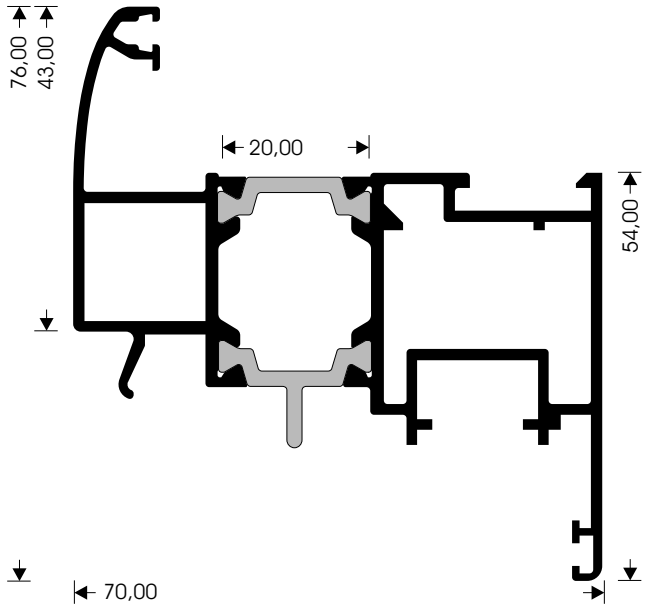

SASH MEDIUM ROUND				
Art.No	M 11344		Weight (gr/m)	1614
Surface area (mm)	primary	107		
	perimeter	446		
Moments of inertia	Ix (cm^4)	15,03		
	Jy (cm^4)	31,99		

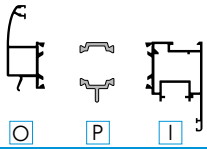

Press corners			"T"-Connectors	
Press corner	110.15300	I	T connector	I
	110.15156	O		O
Screw corner		I	Nail	I
		O		O
Nailed corner		I	Screw	I
		O		O

Alignment corners		Plastic end covers	
O	I		
180.25017	180.20010		

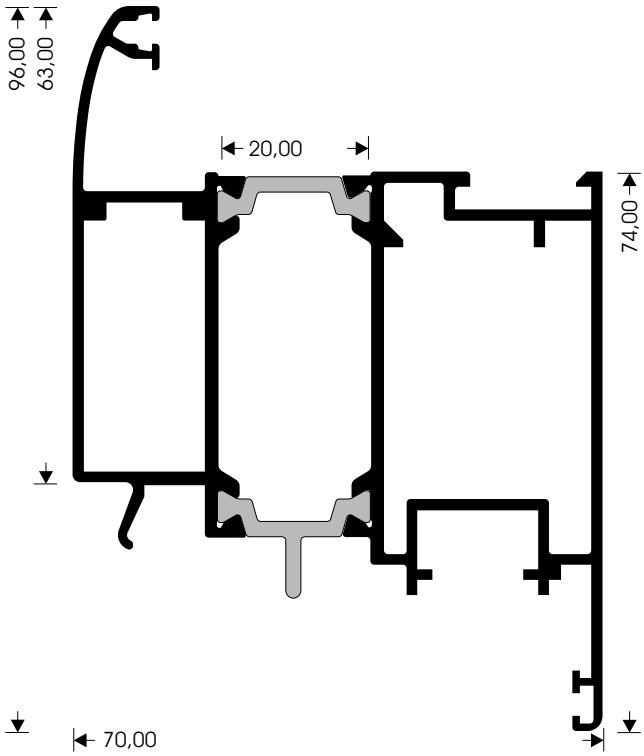

SASH LARGE ROUND				
Art.No	M 11348		Weight (gr/m)	2016
Surface area (mm)	primary	144		
	perimeter	486		
Moments of inertia	Ix (cm^4)	39,95		
	Jy (cm^4)	41,31		

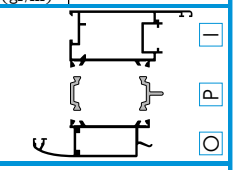

Press corners			"T"-Connectors	
Press corner	110.33300	I	T connector	I
	110.33156	O		O
Screw corner		I	Nail	I
		O		O
Nailed corner		I	Screw	I
		O		O

Alignment corners		Plastic end covers	
O	I		
180.25017	180.20010		

O Outside part P Polyamide I Inside part

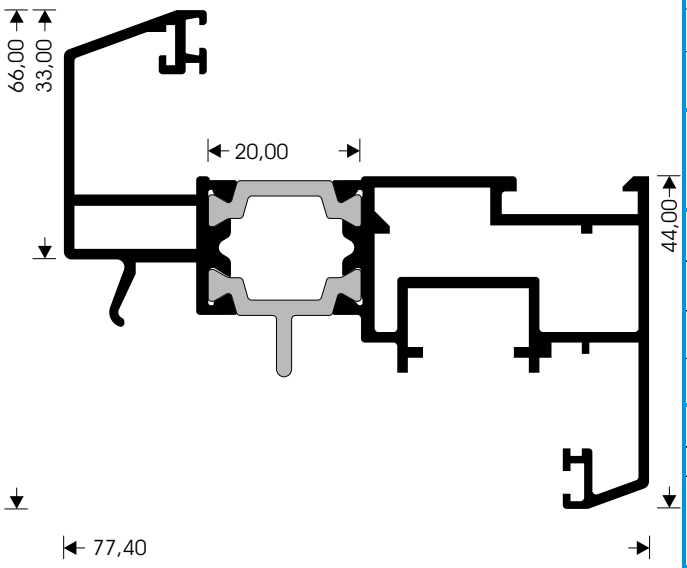

SASH SMALL "PVC-LOOK"				
Art.No	M 11330		Weight (gr/m)	1585
Surface area (mm)	primary	99		
	perimeter	495		
Moments of inertia	Ix (cm⁴)	11,24		
	Jy (cm⁴)	36,83		

O P I

Press corners			"T"-Connectors		
Press corner	110.05375	I	T connector		I
	110.05156	O			O
Screw corner		I	Nail		I
		O			O
Nailed corner		I	Screw		I
		O			O

Alignment corners		Plastic end covers	
O	I		
180.19000	180.20010		
180.25016	180.20006		

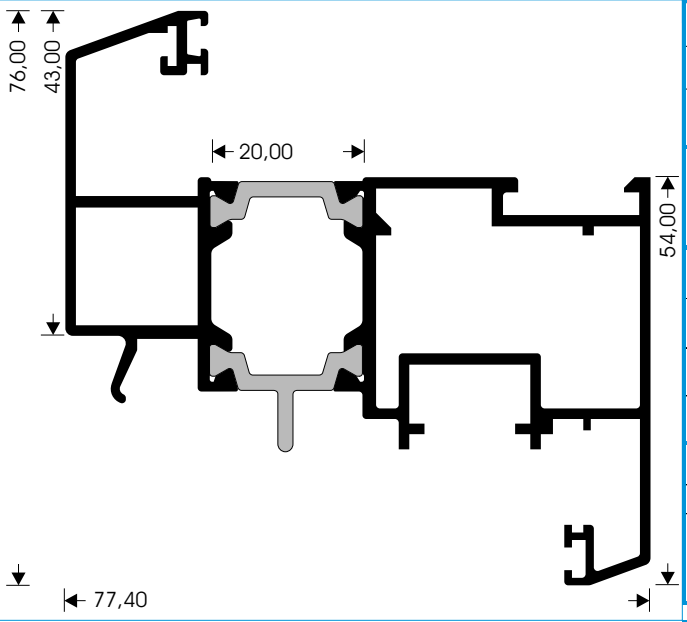

SASH MEDIUM "PVC-LOOK"				
Art.No	M 11334		Weight (gr/m)	1756
Surface area (mm)	primary	120		
	perimeter	515		
Moments of inertia	Ix (cm⁴)	19,50		
	Jy (cm⁴)	41,54		

O P I

Press corners			"T"-Connectors		
Press corner	110.15375	I	T connector		I
	110.15156	O			O
Screw corner		I	Nail		I
		O			O
Nailed corner		I	Screw		I
		O			O

Alignment corners		Plastic end covers	
O	I		
180.25016	180.20006		
180.19000	180.20010		

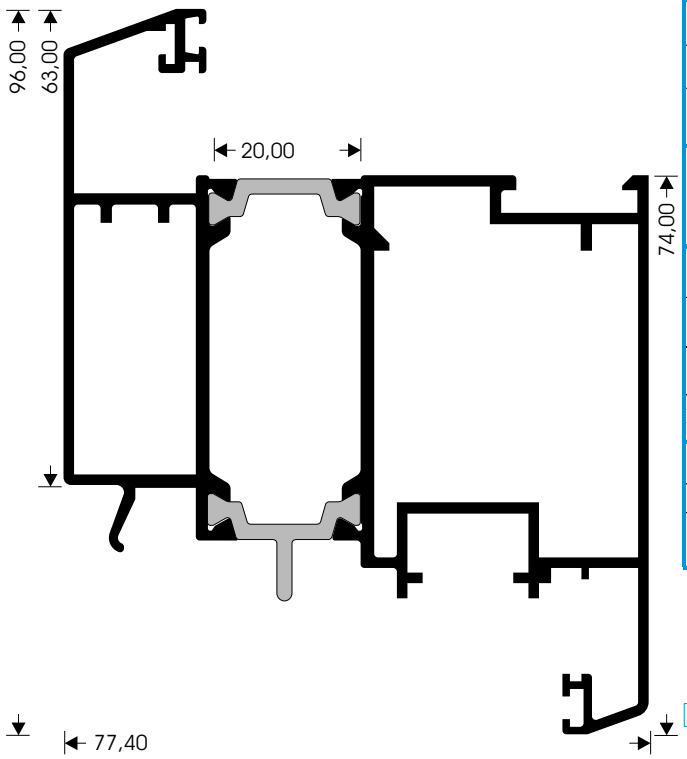

SASH LARGE "PVC-LOOK"				
Art.No	M 11338		Weight (gr/m)	2110
Surface area (mm)	primary	159		
	perimeter	555		
Moments of inertia	Ix (cm⁴)	47,55		
	Jy (cm⁴)	51,79		

I P O

Press corners			"T"-Connectors		
Press corner	110.33375	I	T connector		I
	110.33156	O			O
Screw corner		I	Nail		I
		O			O
Nailed corner		I	Screw		I
		O			O

Alignment corners		Plastic end covers	
O	I		
180.25016	180.20006		
180.19000	180.20010		

O Outside part P Polyamide I Inside part

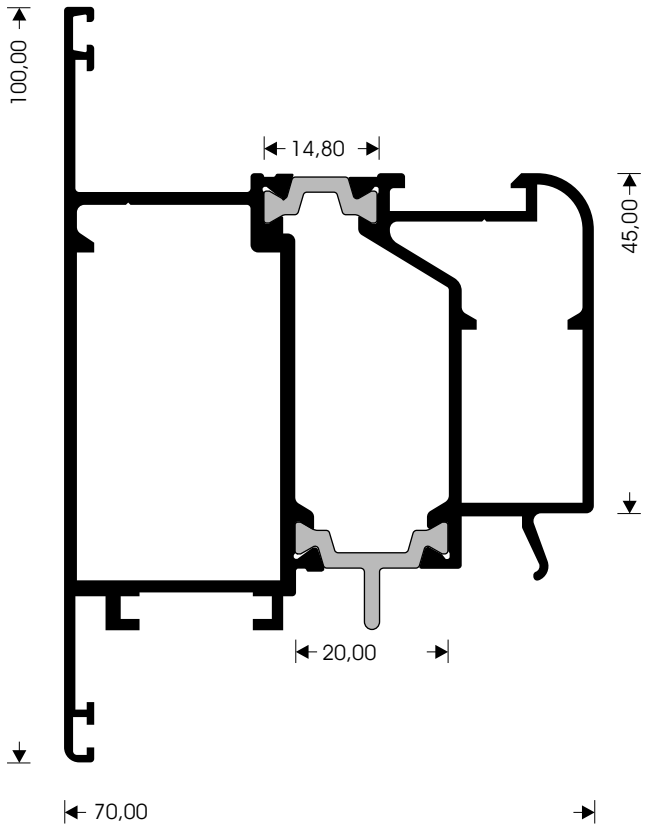

SASH OPENING OUTSIDE FLAT LARGE						
Art.No	M 11393		Weight (gr/m)	2030		
Surface area (mm)	primary	156				
	perimeter	468				
Moments of inertia	Ix (cm^4)	44,55				
	Jy (cm^4)	41,13				
Press corners			"T"-Connectors			
Press corner	110.23156	I	T connector			I
	110.43270	O				O
Screw corner		I	Nail			I
	120.43270	O				O
Nailed corner	130.23156	I	Screw			I
		O				O
Alignment corners			Plastic end covers			
O	I					
180.25018						
180.20010						

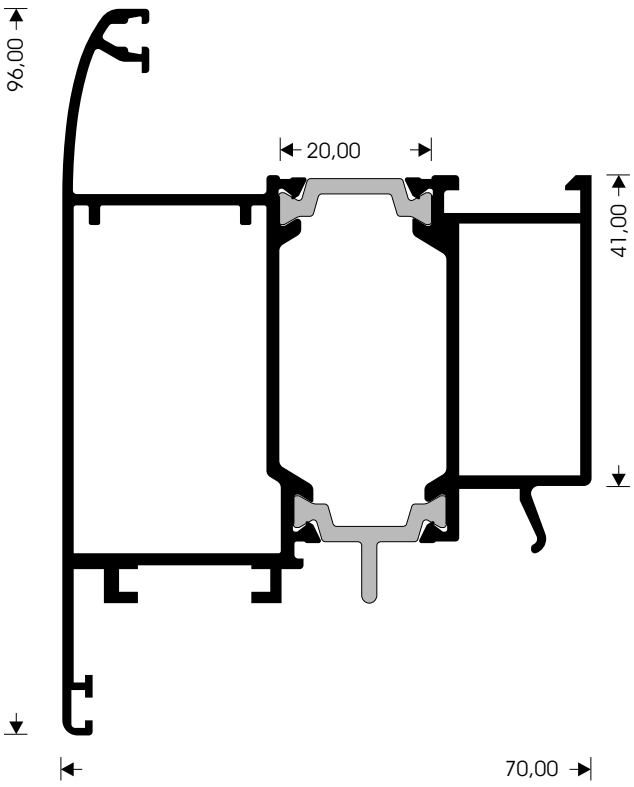

SASH OPENING OUTSIDE LARGE						
Art.No	M 11190		Weight (gr/m)	1923		
Surface area (mm)	primary	146				
	perimeter	479				
Moments of inertia	Ix (cm^4)	40,00				
	Jy (cm^4)	39,39				
Press corners			"T"-Connectors			
Press corner	110.33156	I	T connector			I
	110.43251	O				O
Screw corner		I	Nail			I
	120.43251	O				O
Nailed corner	130.33156	I	Screw			I
		O				O
Alignment corners			Plastic end covers			
O	I					
180.25027						
180.20010						

O Outside part P Polyamide I Inside part

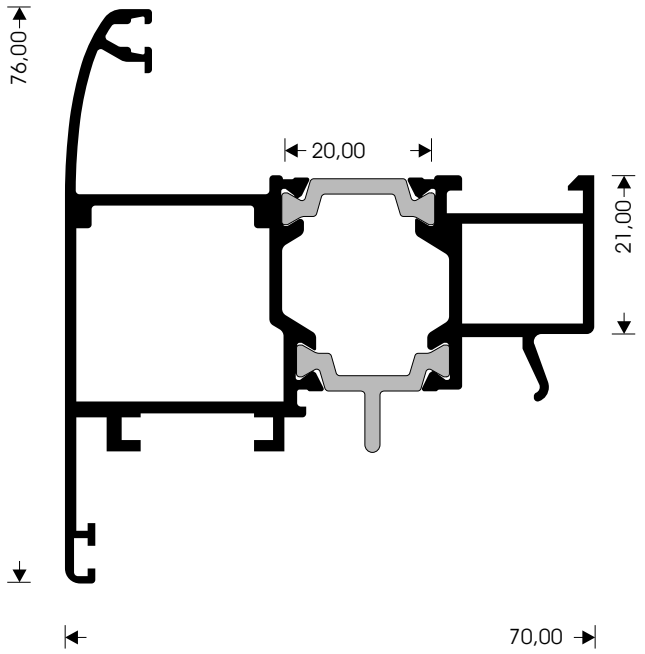

SASH OPENING OUTSIDE SMALL				
Art.No	M 11130		Weight (gr/m)	1622
Surface area (mm)	primary	156		
	perimeter	439		
Moments of inertia	Ix (cm^4)	15,48		
	Jy (cm^4)	31,11		

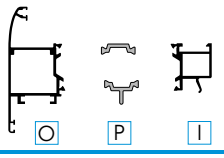

Press corners			"T"-Connectors		
Press corner	110.13156	I	T connector		I
	110.23251	O			O
Screw corner		I	Nail		I
	120.23251	O			O
Nailed corner	130.13156	I	Screw		I
		O			O

Alignment corners		Plastic end covers	
O	I		
180.25027			
180.20010			

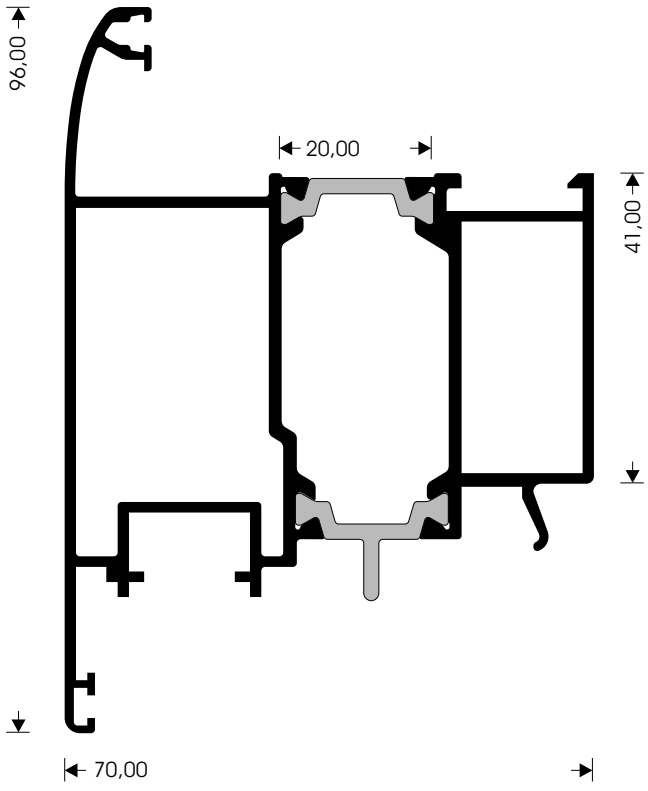

SASH OPENING OUTSIDE ROUND LARGE				
Art.No	M 11392		Weight (gr/m)	1940
Surface area (mm)	primary	146		
	perimeter	488		
Moments of inertia	Ix (cm^4)	38,73		
	Jy (cm^4)	39,18		

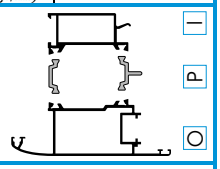

Press corners			"T"-Connectors		
Press corner	110.33156	I	T connector		I
	110.38281	O			O
Screw corner		I	Nail		I
		O			O
Nailed corner		I	Screw		I
		O			O

Alignment corners		Plastic end covers	
O	I		
180.25027			
180.20010			

O Outside part P Polyamide I Inside part

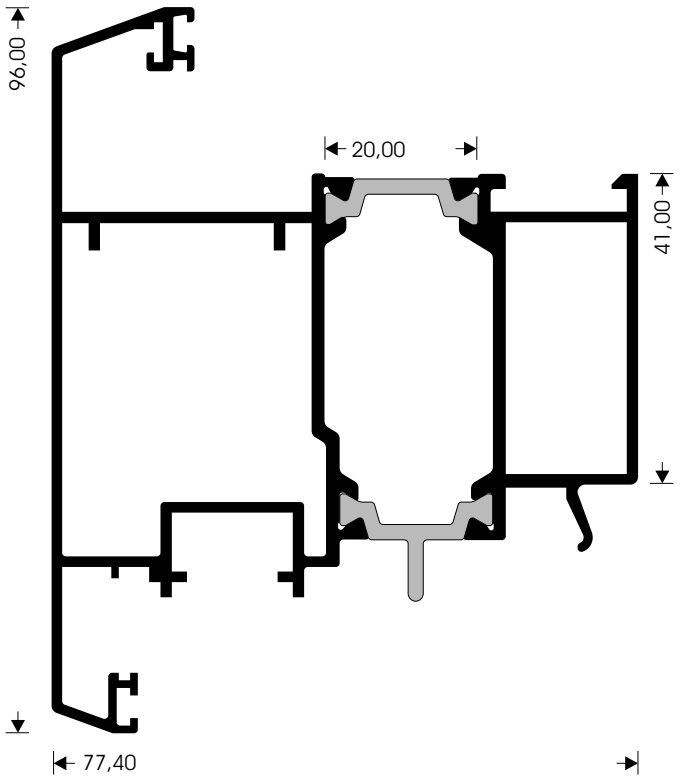

SASH OPENING OUTSIDE "PVC-LOOK" LARGE				
Art.No	M 11391		Weight (gr/m)	2079
Surface area (mm)	primary	160		
	perimeter	561		
Moments of inertia	Ix (cm^4)	46,49		
	Jy (cm^4)	51,23		

Press corners			"T"-Connectors	
Press corner	110.33156	I	T connector	I
	110.33356	O		O
Screw corner		I	Nail	I
		O		O
Nailed corner		I	Screw	I
		O		O

Alignment corners		Plastic end covers	
O	I		
180.20006 180.25033 180.20010 180.19000			

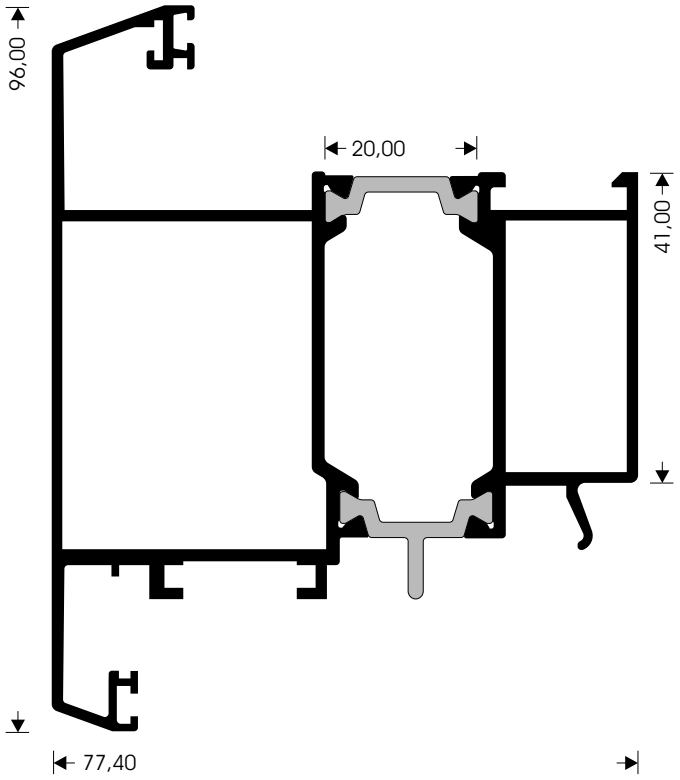

SASH OPENING OUTSIDE "PVC-LOOK" LARGE				
Art.No	M 11390		Weight (gr/m)	2084
Surface area (mm)	primary	160		
	perimeter	551		
Moments of inertia	Ix (cm^4)	47,19		
	Jy (cm^4)	51,14		

Press corners			"T"-Connectors	
Press corner	110.33156	I	T connector	I
	110.43326	O		O
Screw corner		I	Nail	I
	120.43326	O		O
Nailed corner	130.33156	I	Screw	I
		O		O

Alignment corners		Plastic end covers	
O	I		
180.25033 180.20006 180.20010 180.19000			

O Outside part P Polyamide I Inside part

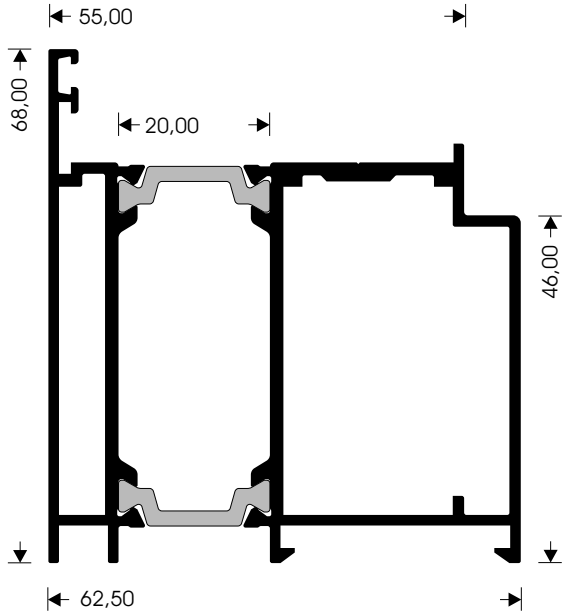

FRAME FOR DOOR FLAT

Art.No	M 11086		Weight (gr/m)	1656
Surface area (mm)	primary	136		
	perimeter	334		
Moments of inertia	Ix (cm⁴)	25,90		
	Jy (cm⁴)	27,39		

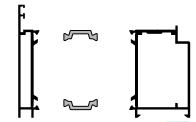

Press corners			"T"-Connectors		
Press corner	110.43220	I	T connector		I
	110.43056	O			O
Screw corner	120.43220	I	Nail		I
		O			O
Nailed corner		I	Screw		I
	130.43056	O			O

Alignment corners		Plastic end covers	
O	I		
180.11801			

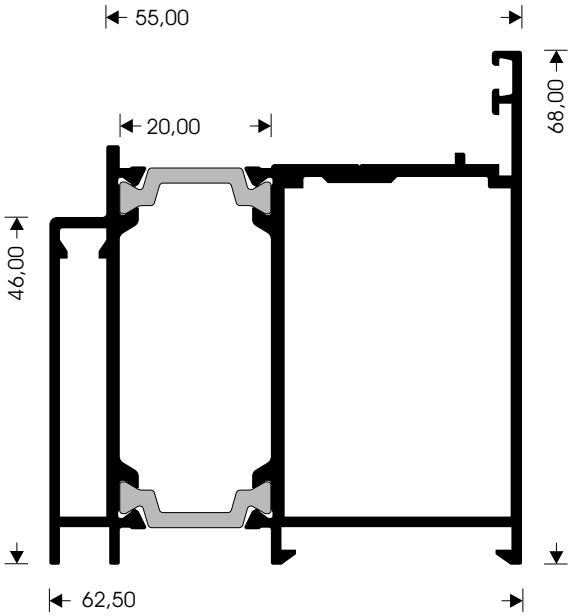

FRAME FOR DOOR OUTSIDE

Art.No	M 11088		Weight (gr/m)	1629
Surface area (mm)	primary	136		
	perimeter	337		
Moments of inertia	Ix (cm⁴)	25,48		
	Jy (cm⁴)	28,65		

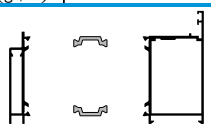

Press corners			"T"-Connectors		
Press corner	110.43295	I	T connector		I
	110.33056	O			O
Screw corner	120.43295	I	Nail		I
		O			O
Nailed corner		I	Screw		I
	130.33056	O			O

Alignment corners		Plastic end covers	
O	I		
	180.11801		

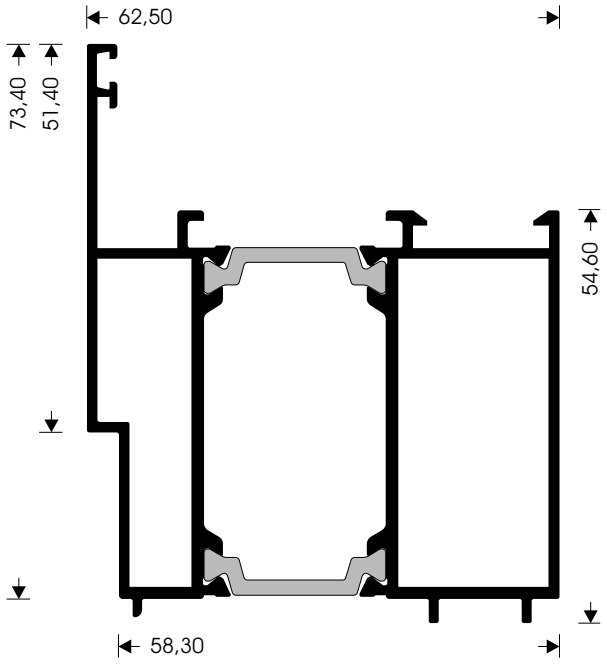

SUPPLEMENTARY PROFILE EXTENSION(KICKPLATE)

Art.No	M 11144		Weight (gr/m)	1588
Surface area (mm)	primary	110		
	perimeter	361		
Moments of inertia	Ix (cm⁴)	26,80		
	Jy (cm⁴)	26,58		

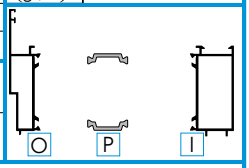

Press corners			"T"-Connectors		
Press corner		I	T connector		I
		O			O
Screw corner		I	Nail		I
		O			O
Nailed corner		I	Screw		I
		O			O

Alignment corners		Plastic end covers	
O	I		
180.25010			

O Outside part P Polyamide I Inside part

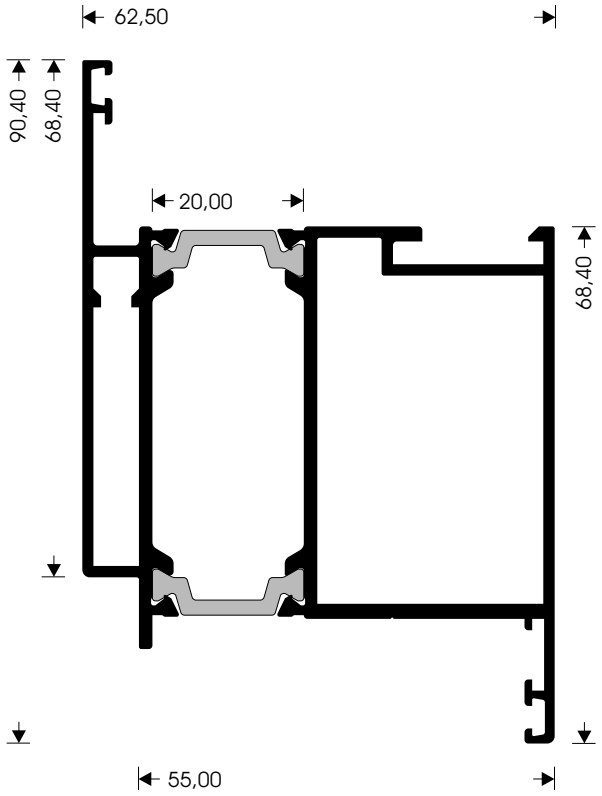

SASH FOR DOOR OPENING INSIDE				
Art.No	M 11082		Weight (gr/m)	1799
Surface area (mm)	primary	141		
	perimeter	388		
Moments of inertia	Ix (cm^4)	34,66		
	Jy (cm^4)	32,57		

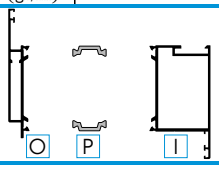

Press corners			"T"-Connectors		
Press corner	110.43295	I	T connector		I
	110.33056	O			O
Screw corner	120.43295	I	Nail		I
		O			O
Nailed corner		I	Screw		I
	130.33056	O			O

Alignment corners		Plastic end covers	
O	I		
180.25005	180.11801		

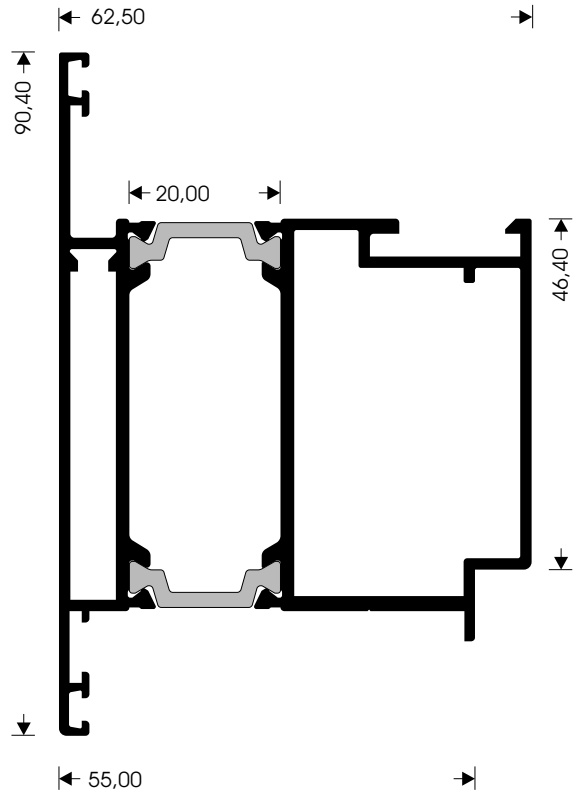

SASH FOR DOOR OPENING OUTSIDE				
Art.No	M 11084		Weight (gr/m)	1816
Surface area (mm)	primary	141		
	perimeter	388		
Moments of inertia	Ix (cm^4)	34,85		
	Jy (cm^4)	30,50		

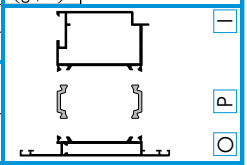

Press corners			"T"-Connectors		
Press corner	110.43220	I	T connector		I
	110.43056	O			O
Screw corner	120.43220	I	Nail		I
		O			O
Nailed corner		I	Screw		I
	130.43056	O			O

Alignment corners		Plastic end covers	
O	I		
180.11801 180.25005			

Outside part P Polyamide I Inside part

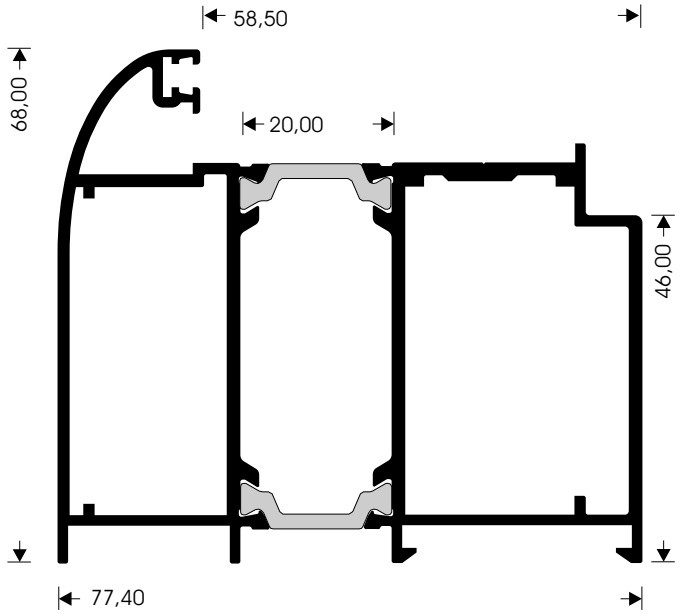

FRAME FOR DOOR ROUND				
Art.No	M 11286		Weight (gr/m)	1906
Surface area (mm)	primary	124	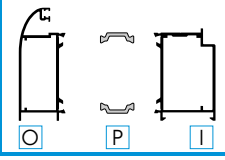	
	perimeter	398		
Moments of inertia	Ix (cm^4)	30,88		
	Jy (cm^4)	43,84	O P I	

Press corners			"T"-Connectors		
Press corner	110.43220	I	T connector		I
	110.43171	O			O
Screw corner	120.43220	I	Nail		I
	120.43171	O			O
Nailed corner		I	Screw		I
		O			O

Alignment corners		Plastic end covers	
O	I		
180.19000			

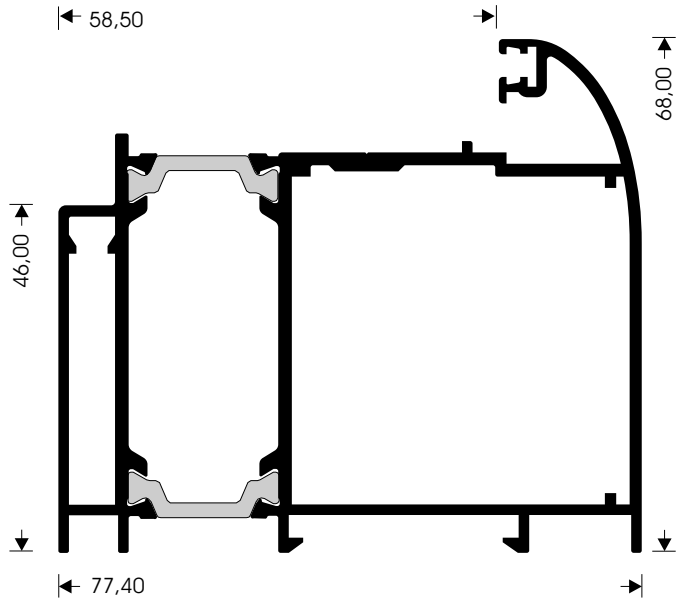

FRAME FOR DOOR ROUND OUTSIDE				
Art.No	M 11288		Weight (gr/m)	1863
Surface area (mm)	primary	124	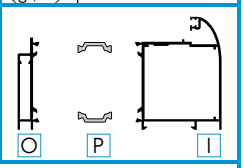	
	perimeter	398		
Moments of inertia	Ix (cm^4)	31,01		
	Jy (cm^4)	49,95	O P I	

Press corners			"T"-Connectors		
Press corner	110.43416	I	T connector		I
	110.33056	O			O
Screw corner	120.43410	I	Nail		I
		O			O
Nailed corner		I	Screw		I
	130.33056	O			O

Alignment corners		Plastic end covers	
O	I		
	180.19000		

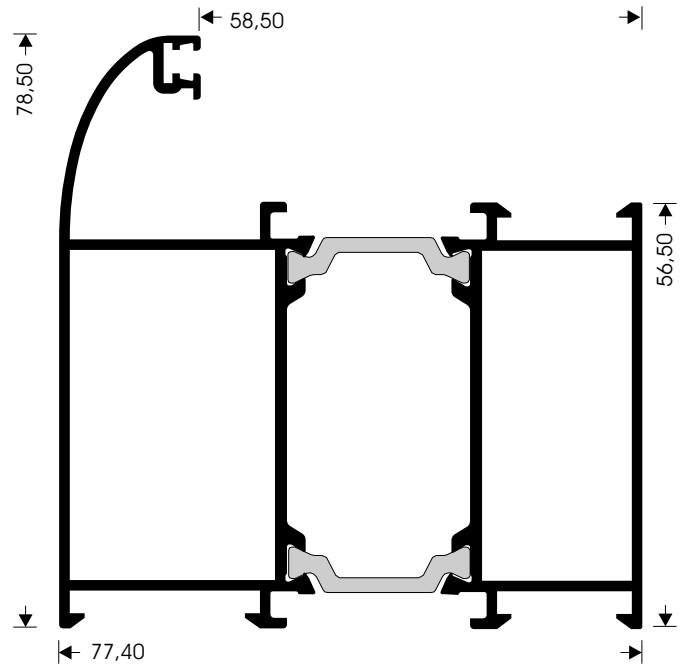

SASH LARGE FLAT				
Art.No	M 11318		Weight (gr/m)	1805
Surface area (mm)	primary	145	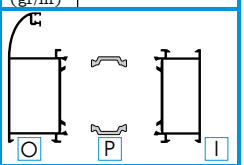	
	perimeter	458		
Moments of inertia	Ix (cm^4)	35,80		
	Jy (cm^4)	43,47	O P I	

Press corners			"T"-Connectors		
Press corner	110.43196	I	T connector		I
	110.43270	O			O
Screw corner	120.43196	I	Nail		I
	120.43270	O			O
Nailed corner		I	Screw		I
		O			O

Alignment corners		Plastic end covers	
O	I		
180.19000 180.25260			

O Outside part P Polyamide I Inside part

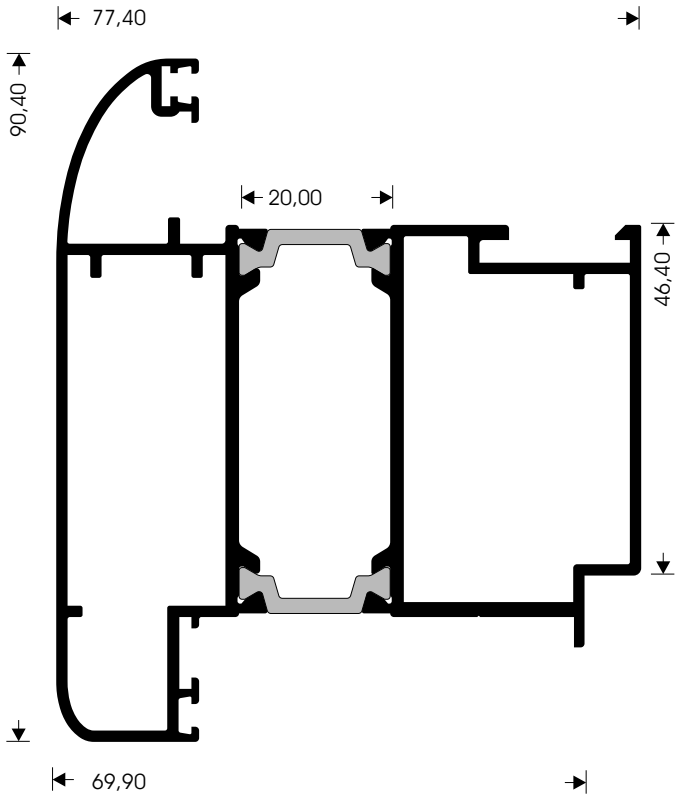

SASH FOR DOOR ROUND OPENING OUTSIDE

Art.No	M 11138		Weight (gr/m)	2096
Surface area (mm)	primary	163		
	perimeter	458		
Moments of inertia	Ix (cm⁴)	40,24		
	Jy (cm⁴)	47,09		

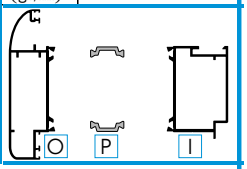

Press corners			"T"-Connectors		
Press corner	110.43220	I	T connector		I
	110.43205	O			O
Screw corner		I	Nail		I
		O			O
Nailed corner		I	Screw		I
		O			O

Alignment corners		Plastic end covers	
O	I		
180.25005			
180.11801			
180.19000			

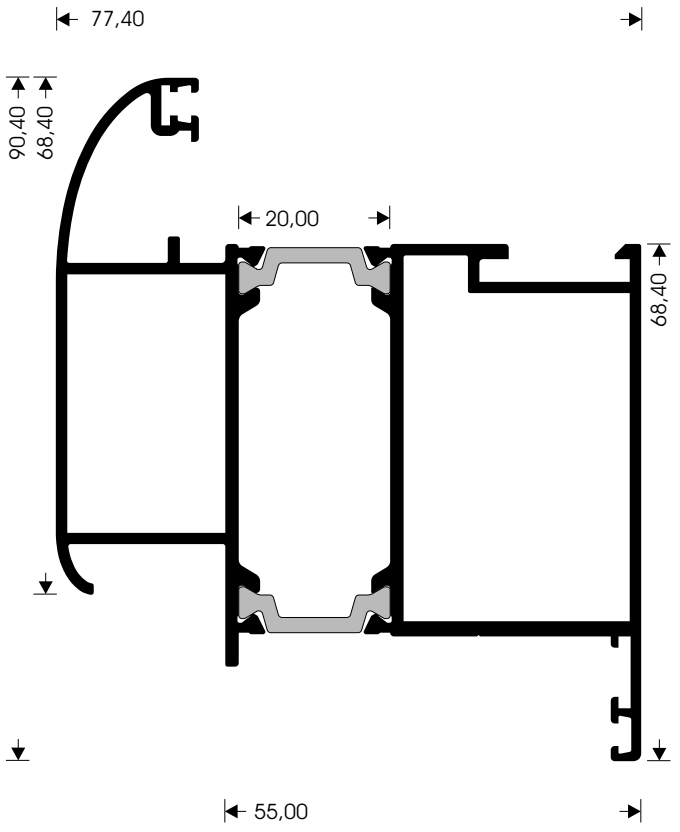

SASH FOR DOOR ROUND OPENING INSIDE

Art.No	M 11134		Weight (gr/m)	1986
Surface area (mm)	primary	149		
	perimeter	473		
Moments of inertia	Ix (cm⁴)	40,24		
	Jy (cm⁴)	47,09		

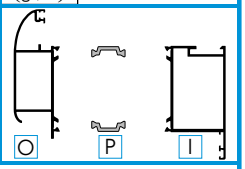

Press corners			"T"-Connectors		
Press corner	110.43295	I	T connector		I
	110.33196	O			O
Screw corner	120.43295	I	Nail		I
		O			O
Nailed corner		I	Screw		I
	130.33196	O			O

Alignment corners		Plastic end covers	
O	I		
180.25005	180.11801		
180.19000			

O Outside part P Polyamide I Inside part

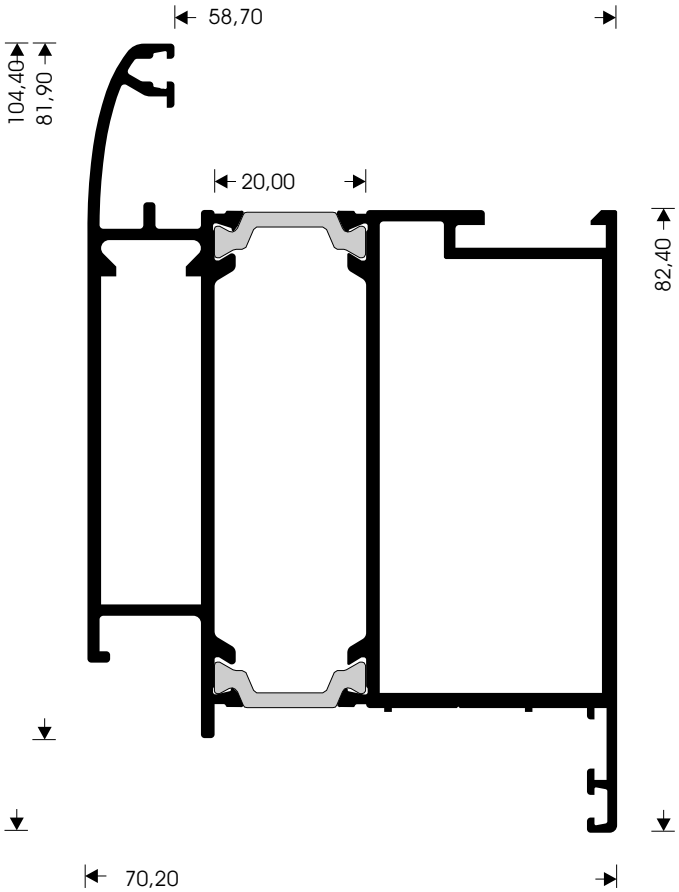

SASH FOR DOOR ROUND OPENING INSIDE				
Art.No	M 11234		Weight (gr/m)	2299
Surface area (mm)	primary	171	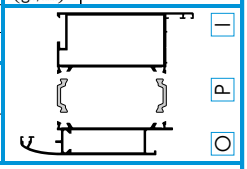	
	perimeter	457		
Moments of inertia	Ix (cm^4)	64,34		
	Jy (cm^4)	51,46		

Press corners			"T"-Connectors		
Press corner	110.57290	I	T connector		I
	110.43121	O			O
Screw corner		I	Nail		I
		O			O
Nailed corner		I	Screw		I
		O			O

Alignment corners		Plastic end covers	
O	I		
180.25005	180.11801		

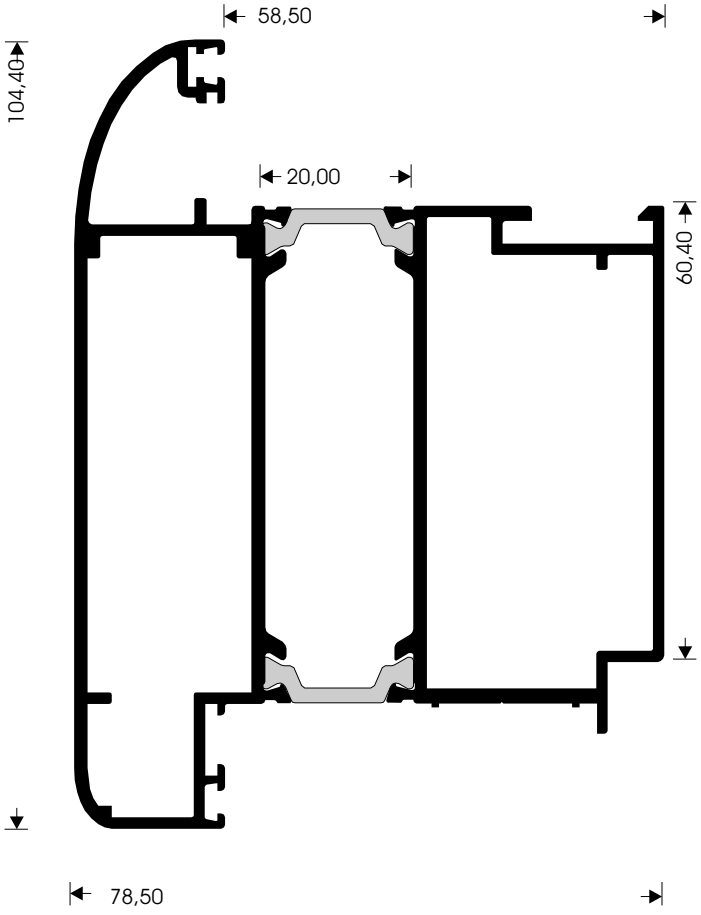

SASH FOR DOOR ROUND OPENING OUTSIDE				
Art.No	M 11238		Weight (gr/m)	2471
Surface area (mm)	primary	192	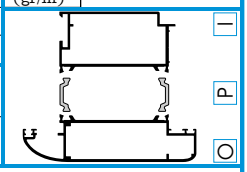	
	perimeter	479		
Moments of inertia	Ix (cm^4)	81,13		
	Jy (cm^4)	59,13		

Press corners			"T"-Connectors		
Press corner	110.57220	I	T connector		I
	110.57213	O			O
Screw corner		I	Nail		I
		O			O
Nailed corner		I	Screw		I
		O			O

Alignment corners		Plastic end covers	
O	I		
180.25005 180.19000 180.11801			

O Outside part P Polyamide I Inside part

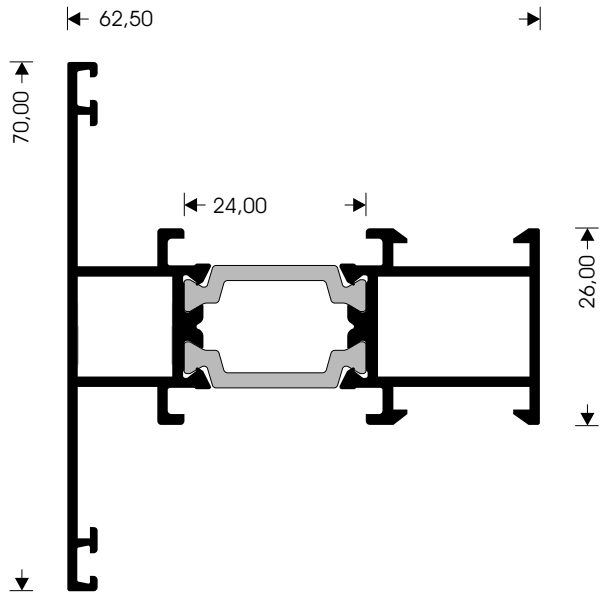

"T"-PROFILE				
Art.No	M 11062		Weight (gr/m)	1224
Surface area (mm)	primary	104		
	perimeter	397		
Moments of inertia	Ix (cm^4)	7,72		
	Jy (cm^4)	20,70		

Press corners			"T"-Connectors		
Press corner		I	T connector	160.11213	I
		O		160.11813	O
Screw corner		I	Nail		I
		O			O
Nailed corner		I	Screw		I
		O			O

Alignment corners		Plastic end covers	
O	I		

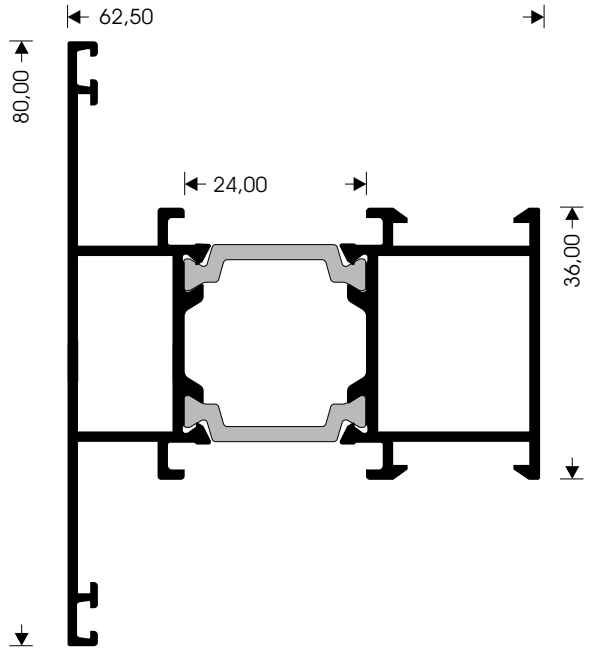

"T"-PROFILE				
Art.No	M 11064		Weight (gr/m)	1392
Surface area (mm)	primary	124		
	perimeter	418		
Moments of inertia	Ix (cm^4)	14,03		
	Jy (cm^4)	23,95		

Press corners			"T"-Connectors		
Press corner		I	T connector	160.11223	I
		O		160.11823	O
Screw corner		I	Nail		I
		O			O
Nailed corner		I	Screw		I
		O			O

Alignment corners		Plastic end covers	
O	I		

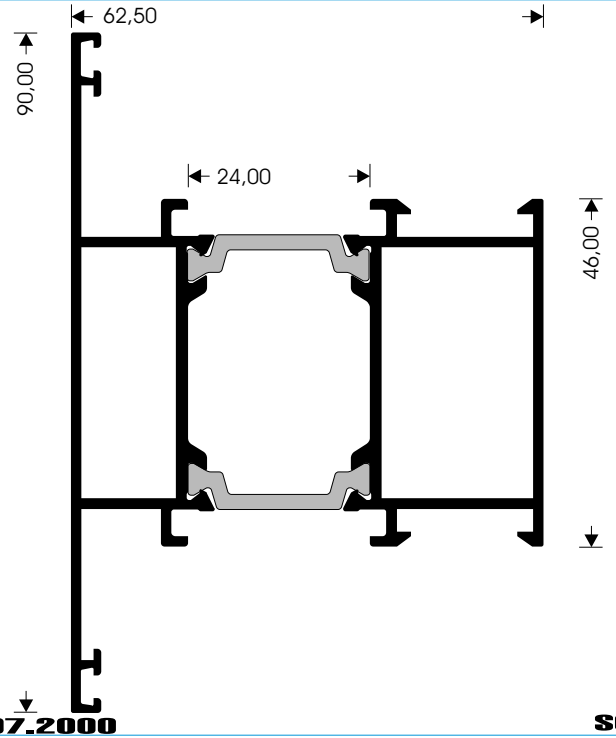

"T"-PROFILE				
Art.No	M 11066		Weight (gr/m)	1545
Surface area (mm)	primary	144		
	perimeter	438		
Moments of inertia	Ix (cm^4)	23,31		
	Jy (cm^4)	27,16		

Press corners			"T"-Connectors		
Press corner		I	T connector	160.11233	I
		O		160.11833	O
Screw corner		I	Nail		I
		O			O
Nailed corner		I	Screw		I
		O			O

Alignment corners		Plastic end covers	
O	I		

O Outside part P Polyamide I Inside part

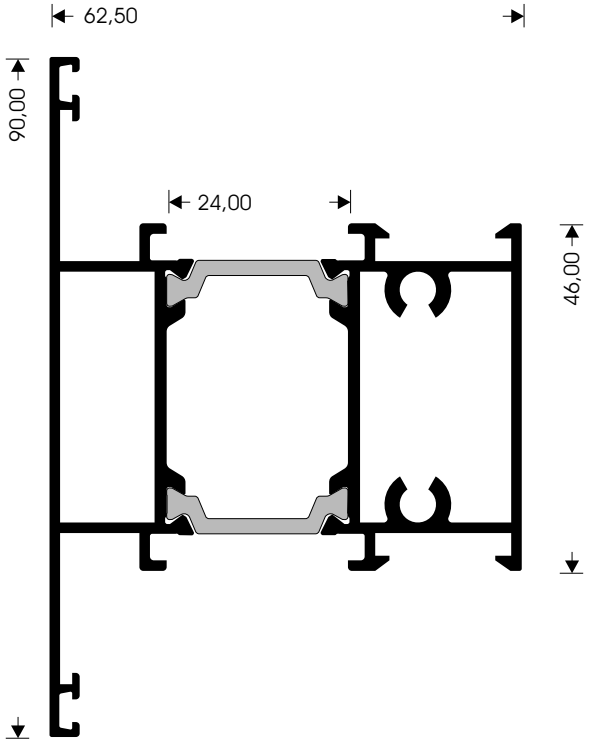

"T"-PROFILE				
Art.No	M 11266		Weight (gr/m)	1678
Surface area (mm)	primary	144		
	perimeter	438		
Moments of inertia	Ix (cm^4)	24,28		
	Jy (cm^4)	29,50		

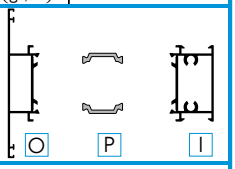

Press corners			"T"-Connectors		
Press corner		I	T connector		I
		O			O
Screw corner		I	Nail		I
		O			O
Nailed corner		I	Screw	M5(x2)	I
		O			O

Alignment corners		Plastic end covers	
O	I		

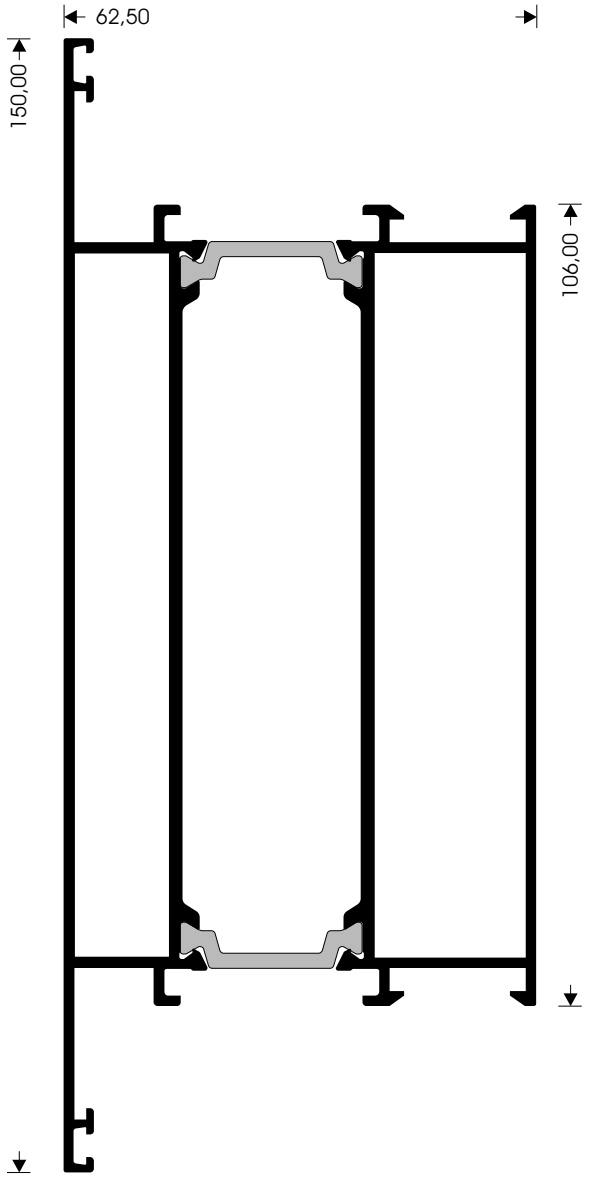

"T"-PROFILE				
Art.No	M 11068		Weight (gr/m)	2649
Surface area (mm)	primary	264		
	perimeter	558		
Moments of inertia	Ix (cm^4)	160,81		
	Jy (cm^4)	47,47		

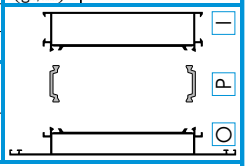

Press corners			"T"-Connectors		
Press corner		I	T connector	160.11223(x2)	I
		O		160.11823(x2)	O
Screw corner		I	Nail		I
		O			O
Nailed corner		I	Screw		I
		O			O

Alignment corners		Plastic end covers	
O	I		

O Outside part P Polyamide I Inside part

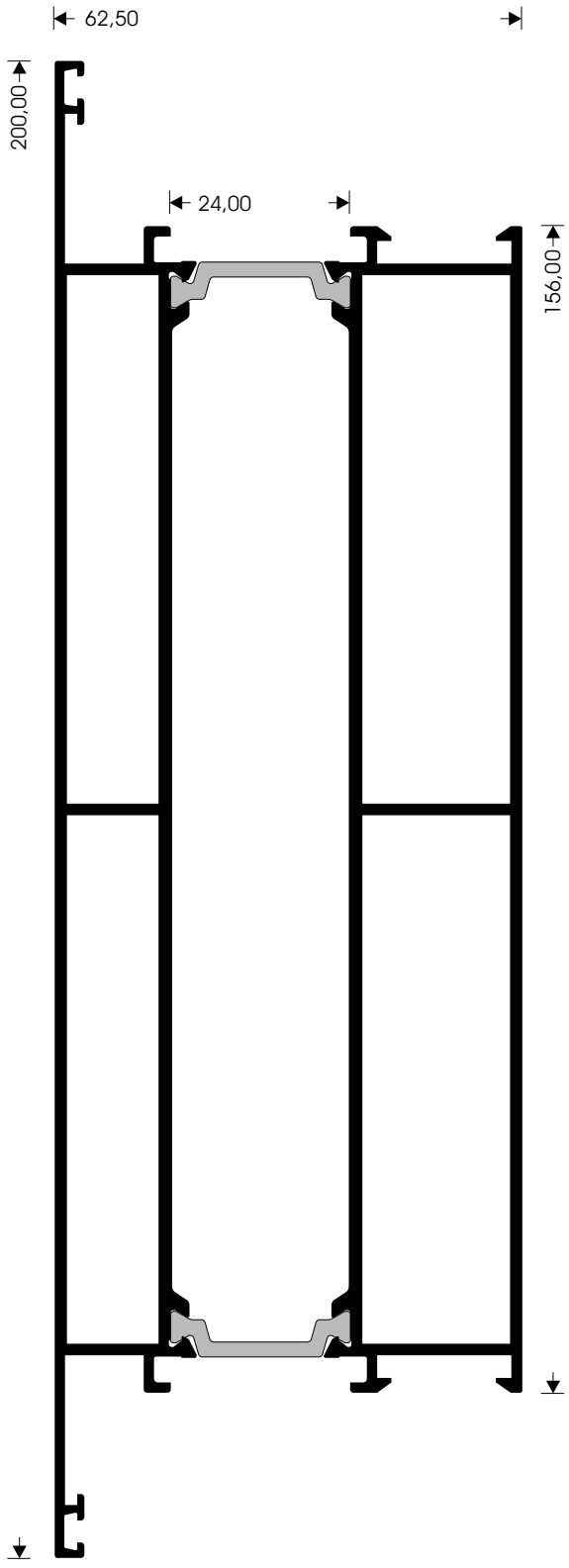

"T"-PROFILE				
Art.No	M 11070		Weight (gr/m)	3802
Surface area (mm)	primary	364		
	perimeter	65,8		
Moments of inertia	Ix (cm^4)	430,70		
	Jy (cm^4)	71,29		

Press corners			"T"-Connectors		
Press corner		I	T connector	160.11233(x2)	I
		O		160.11833(x2)	O
Screw corner		I	Nail		I
		O			O
Nailed corner		I	Screw		I
		O			O

Alignment corners		Plastic end covers	
O	I		

O Outside part P Polyamide I Inside part

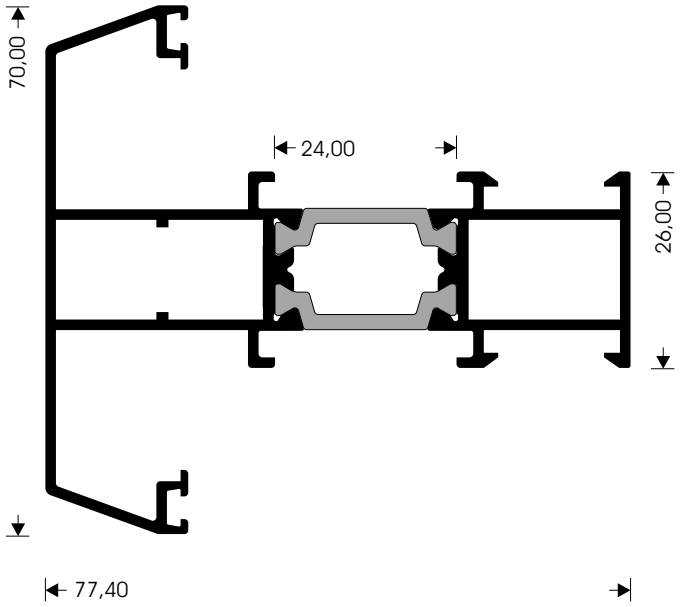

"T"-PROFILE SMALL "PVC-LOOK"

Art.No	M 11362		Weight (gr/m)	1522
Surface area (mm)	primary	124		
	perimeter	491		
Moments of inertia	Ix (cm^4)	12,58		
	Jy (cm^4)	35,30		

O P I

Press corners			"T"-Connectors		
Press corner		I	T connector	160.11213	I
		O		160.11813	O
Screw corner		I	Nail		I
		O			O
Nailed corner		I	Screw		I
		O			O

Alignment corners		Plastic end covers	
O	I		

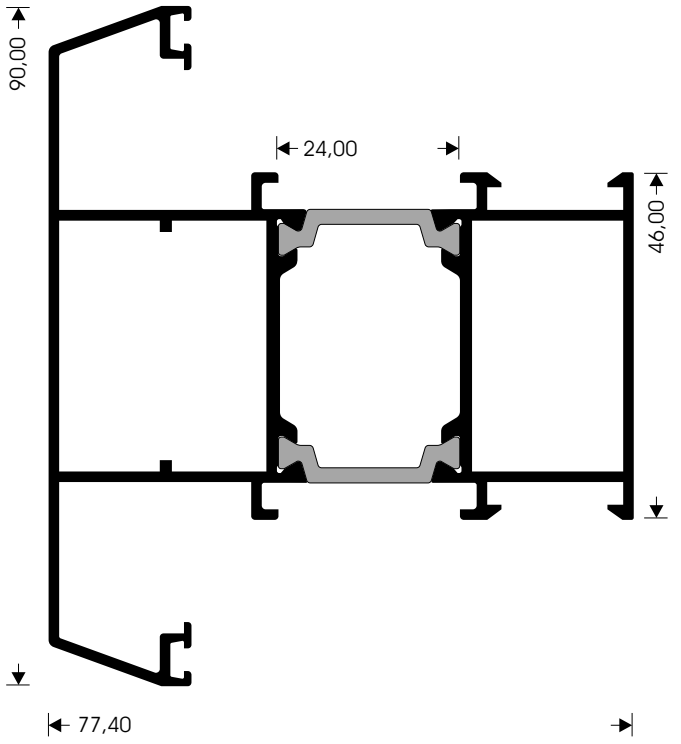

"T"-PROFILE LARGE "PVC-LOOK"

Art.No	M 11366		Weight (gr/m)	1866
Surface area (mm)	primary	164		
	perimeter	531		
Moments of inertia	Ix (cm^4)	32,72		
	Jy (cm^4)	45,03		

O P I

Press corners			"T"-Connectors		
Press corner		I	T connector	160.11233	I
		O		160.11833	O
Screw corner		I	Nail		I
		O			O
Nailed corner		I	Screw		I
		O			O

Alignment corners		Plastic end covers	
O	I		

O Outside part P Polyamide I Inside part

"T"-PROFILE ROUND SMALL				
Art.No	M 11188		Weight (gr/m)	2245
Surface area (mm)	primary	204		
	perimeter	518		
Moments of inertia	Ix (cm^4)	43,01		
	Jy (cm^4)	84,65		

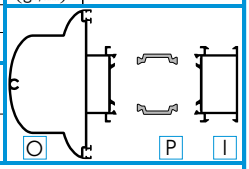

Press corners			"T"-Connectors		
Press corner		I	T connector	160.11233	I
		O		160.11833	O
Screw corner		I	Nail		I
		O			O
Nailed corner		I	Screw		I
		O		M5	O

Alignment corners		Plastic end covers	
O	I		
180.19000(x2)			

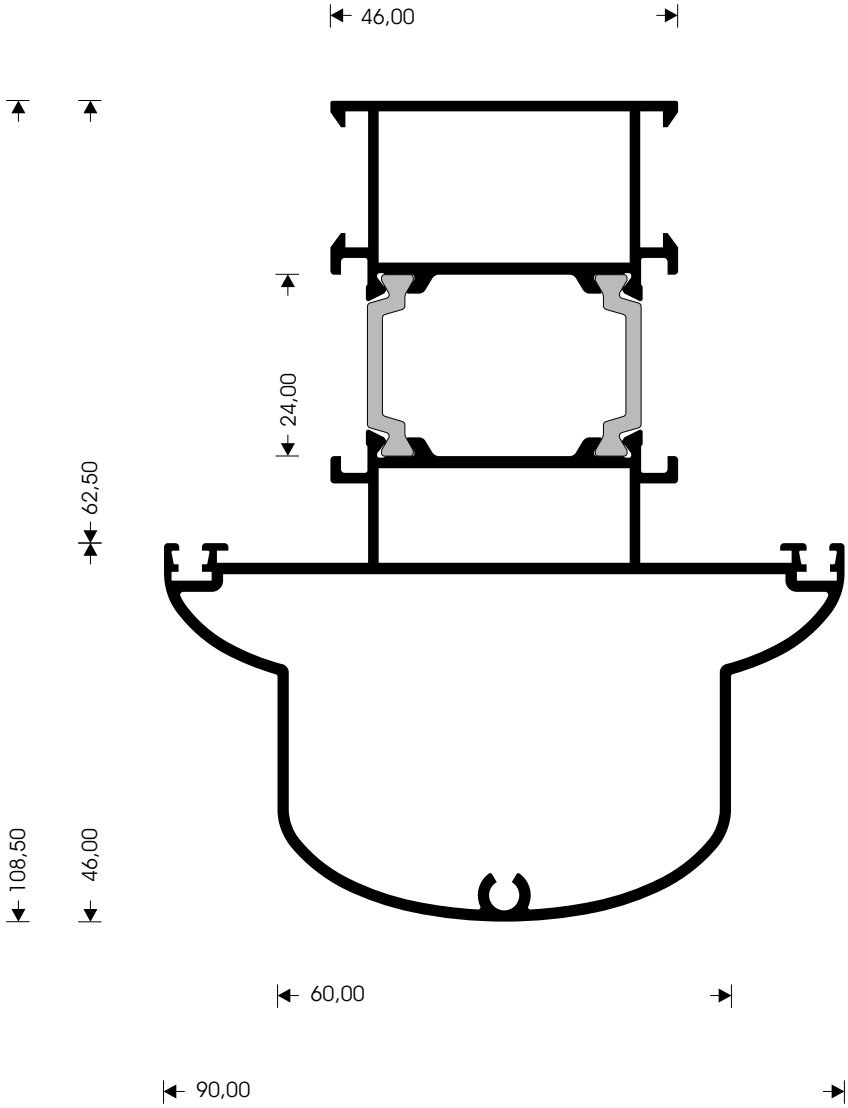

O Outside part P Polyamide I Inside part

"T"-PROFILE ROUND LARGE					
Art.No	M 11078		Weight (gr/m)	2399	
Surface area (mm)	primary	242	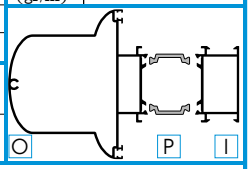		
	perimeter	554			
Moments of inertia	Ix (cm^4)	47,81			
	Jy (cm^4)	125,99			

Press corners			"T"-Connectors		
Press corner		I	T connector	160.11233	I
		O		160.11833	O
Screw corner		I	Nail		I
		O			O
Nailed corner		I	Screw		I
		O		M5	O

Alignment corners		Plastic end covers	
O	I		
180.19000(x2)			

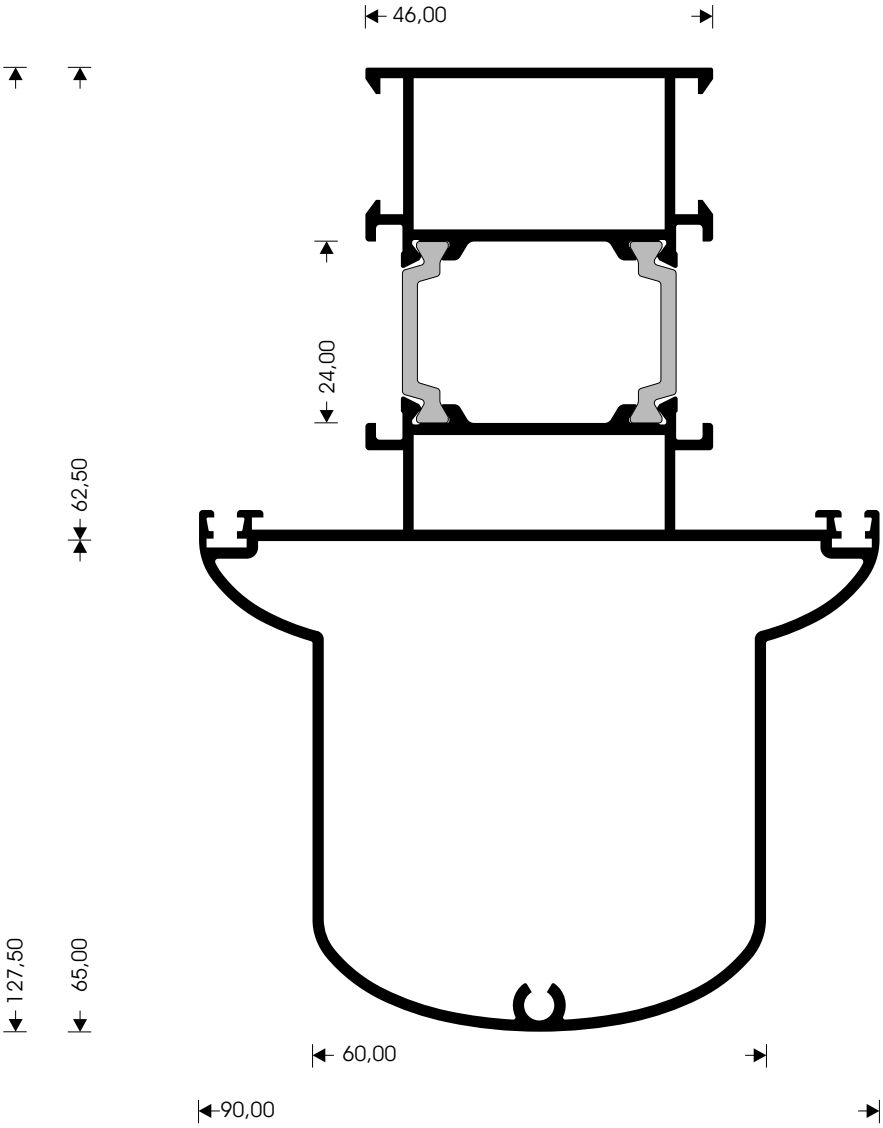

O Outside part P Polyamide I Inside part

"T"-PROFILE SQUARE			Weight (gr/m)	2148
Art.No	M 11074			
Surface area (mm)	primary	242		
	perimeter	537		
Moments of inertia	Ix_4 (cm)	37,53		
	Jy (cm^4)	92,90		

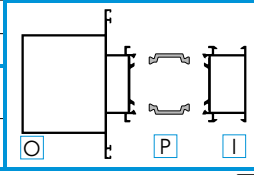

Press corners			"T"-Connectors		
Press corner		I	T connector	160.11233	I
		O		160.11833	O
Screw corner		I	Nail		I
		O			O
Nailed corner		I	Screw		I
		O			O
Alignment corners			Plastic end covers		
O	I				

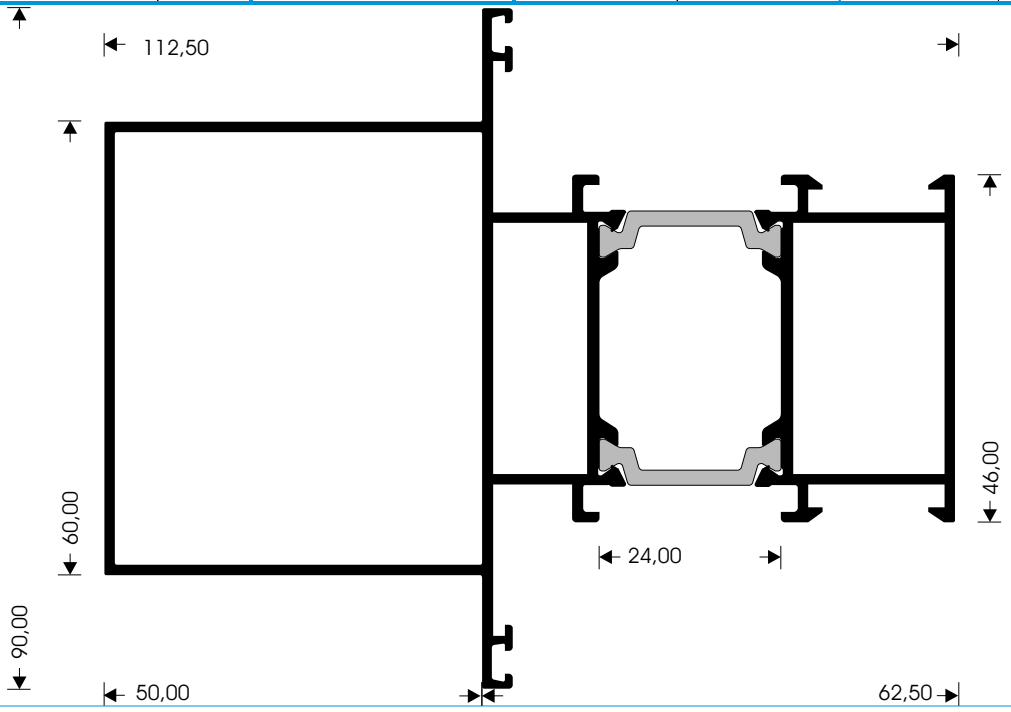

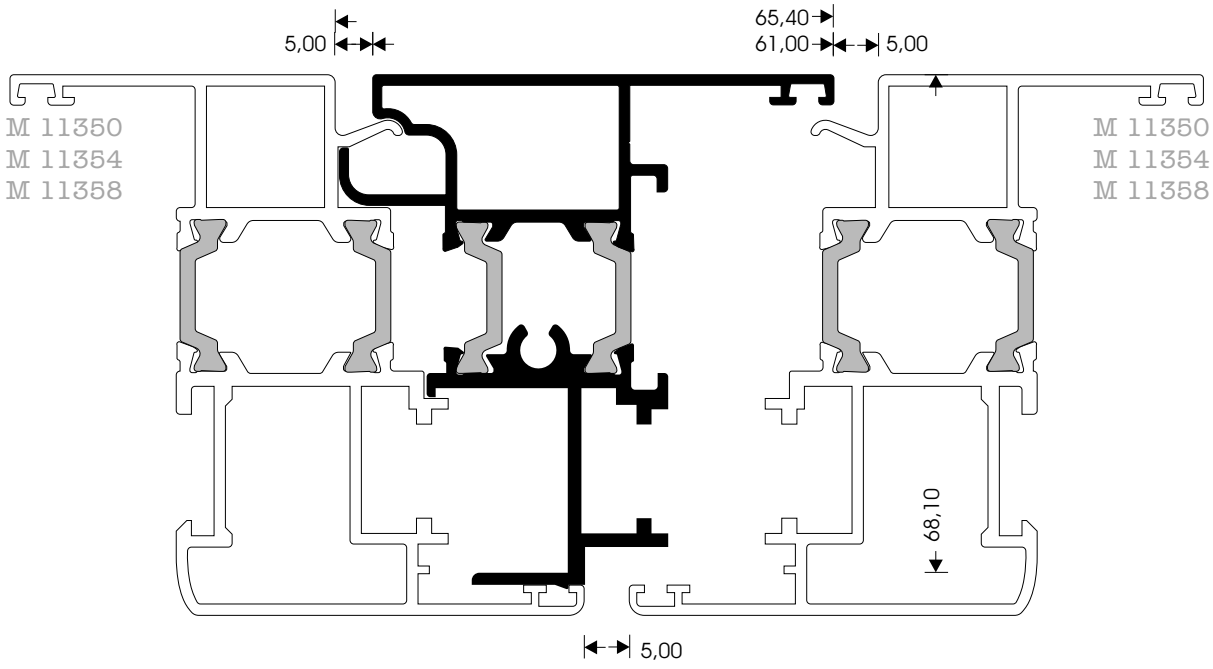

ADJOINING PROFILE FLAT			Weight (gr/m)	1424
Art.No	M 11558			
Surface area (mm)	primary	61		
	perimeter	420		
Moments of inertia	Ix_4 (cm)	9,20		
	Jy (cm^4)	22,03		

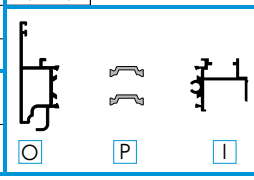

Press corners			"T"-Connectors		
Press corner		I	T connector		I
		O			O
Screw corner		I	Nail		I
		O			O
Nailed corner		I	Screw		I
		O			O
Alignment corners			Plastic end covers		
O	I				

O Outside part P Polyamide I Inside part

ADJOINING PROFILE FLAT			Weight (gr/m)	1363
Art.No	M 11058			
Surface area (mm)	primary	71		
	perimeter	440		
Moments of inertia	Ix_4 (cm)	9,36		
	Jy (cm^4)	20,85		

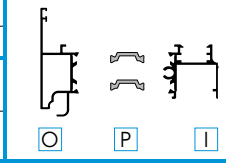

Press corners			"T"-Connectors		
Press corner		I	T connector		I
		O			O
Screw corner		I	Nail		I
		O			O
Nailed corner		I	Screw		I
		O			O
Alignment corners			Plastic end covers		
O	I				

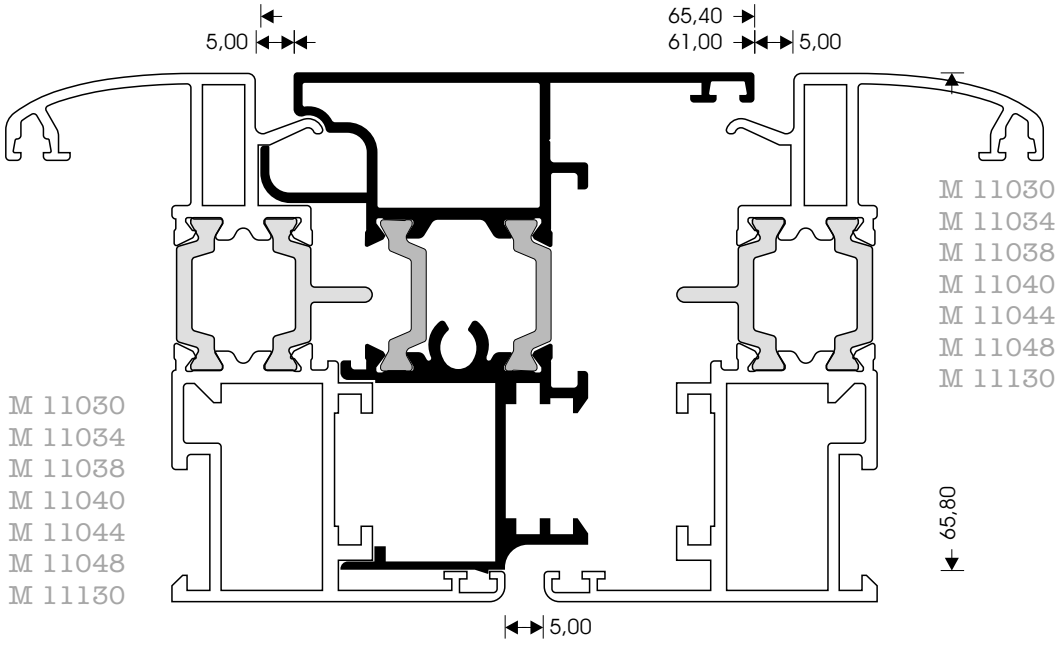

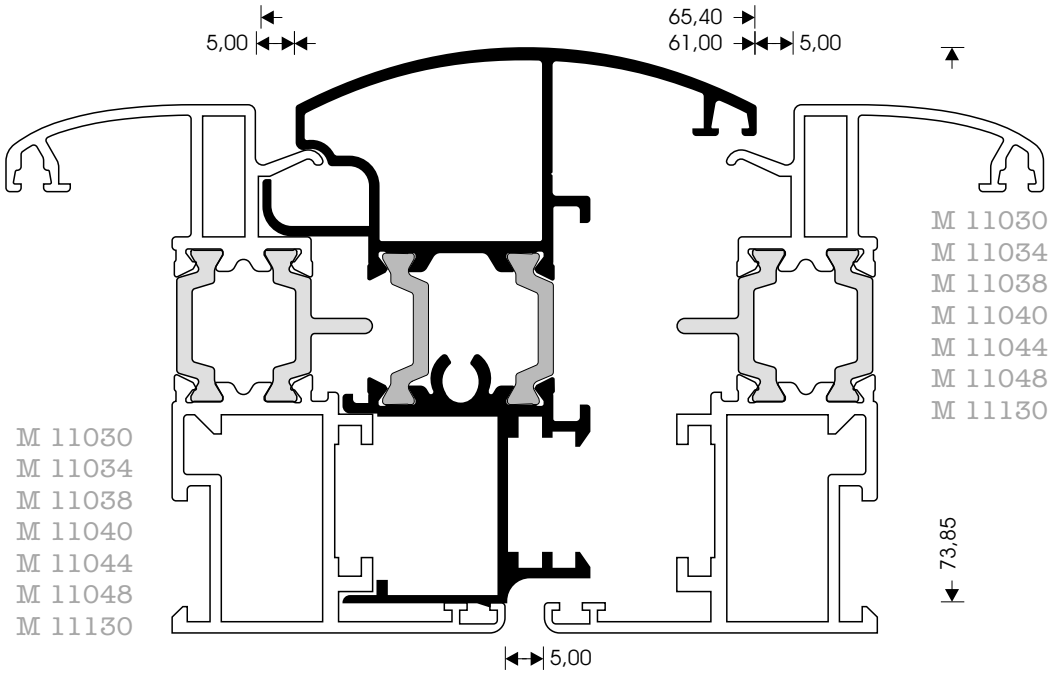

ADJOINING PROFILE ROUND			Weight (gr/m)	1430
Art.No	M 11258			
Surface area (mm)	primary	78		
	perimeter	451		
Moments of inertia	Ix_4 (cm)	10,50		
	Jy (cm^4)	25,56		

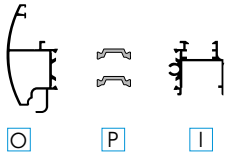

Press corners			"T"-Connectors		
Press corner		I	T connector		I
		O			O
Screw corner		I	Nail		I
		O			O
Nailed corner		I	Screw		I
		O			O
Alignment corners			Plastic end covers		
O	I				

O Outside part P Polyamide I Inside part

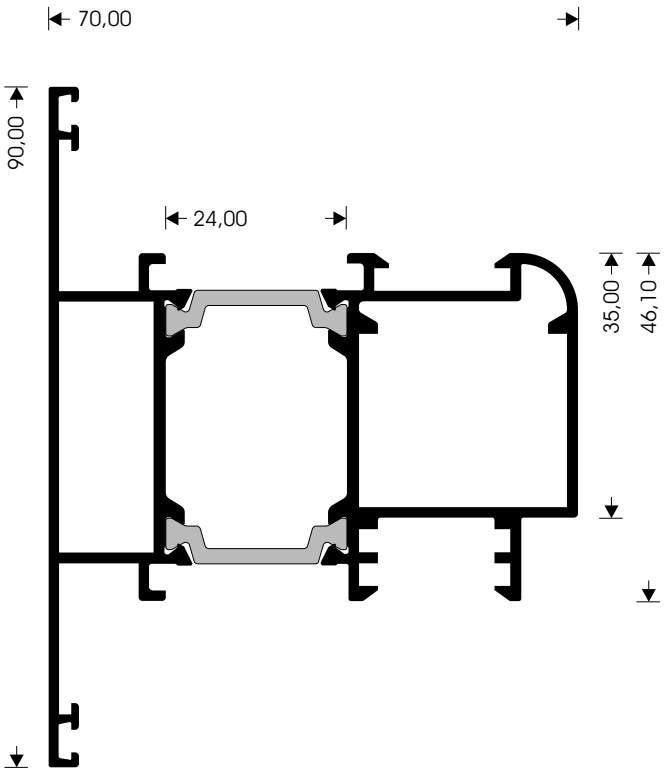

SASH FOR PIVOTING WINDOW				
Art.No	M 11148		Weight (gr/m)	1671
Surface area (mm)	primary	139		
	perimeter	463		
Moments of inertia	Ix (cm^4)	23,75		
	Jy (cm^4)	34,54		

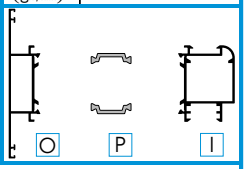

Press corners			"T"-Connectors		
Press corner	110.23270	I	T connector		I
	110.33121	O			O
Screw corner	120.23270	I	Nail		I
		O			O
Nailed corner		I	Screw		I
	130.33121	O			O

Alignment corners		Plastic end covers	
O	I		
	180.25010		

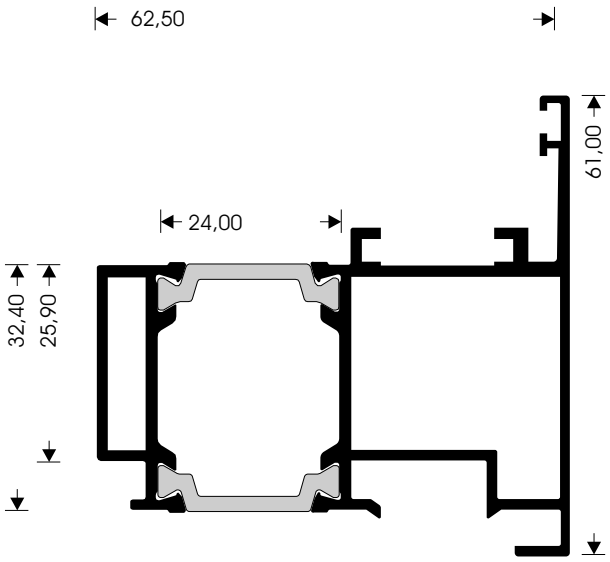

ADJOING PROFILE PIVOTING WINDOW				
Art.No	M 11152		Weight (gr/m)	1345
Surface area (mm)	primary	96		
	perimeter	345		
Moments of inertia	Ix (cm^4)	12,11		
	Jy (cm^4)	24,65		

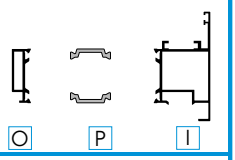

Press corners			"T"-Connectors		
Press corner	110.23270	I	T connector		I
	110.23046	O			O
Screw corner	120.23270	I	Nail		I
		O			O
Nailed corner		I	Screw		I
	130.23046	O			O

Alignment corners		Plastic end covers	
O	I		
180.20010			

O Outside part P Polyamide I Inside part

ADJOINING PROFILE OPENING INSIDE ROUND

Art.No	M 11198	
Surface area (mm)	primary	78
	perimeter	329
Moments of inertia	Ix_4 (cm)	4,78
	Jy (cm^4)	21,48
Weight (gr/m)	1160	

O P I

Press corners		
Press corner		I
		O
Screw corner		I
		O
Nailed corner		I
		O

"T"-Connectors		
T connector		I
		O
Nail		I
		O
Screw		I
		O

Alignment corners	
O	I

Plastic end covers

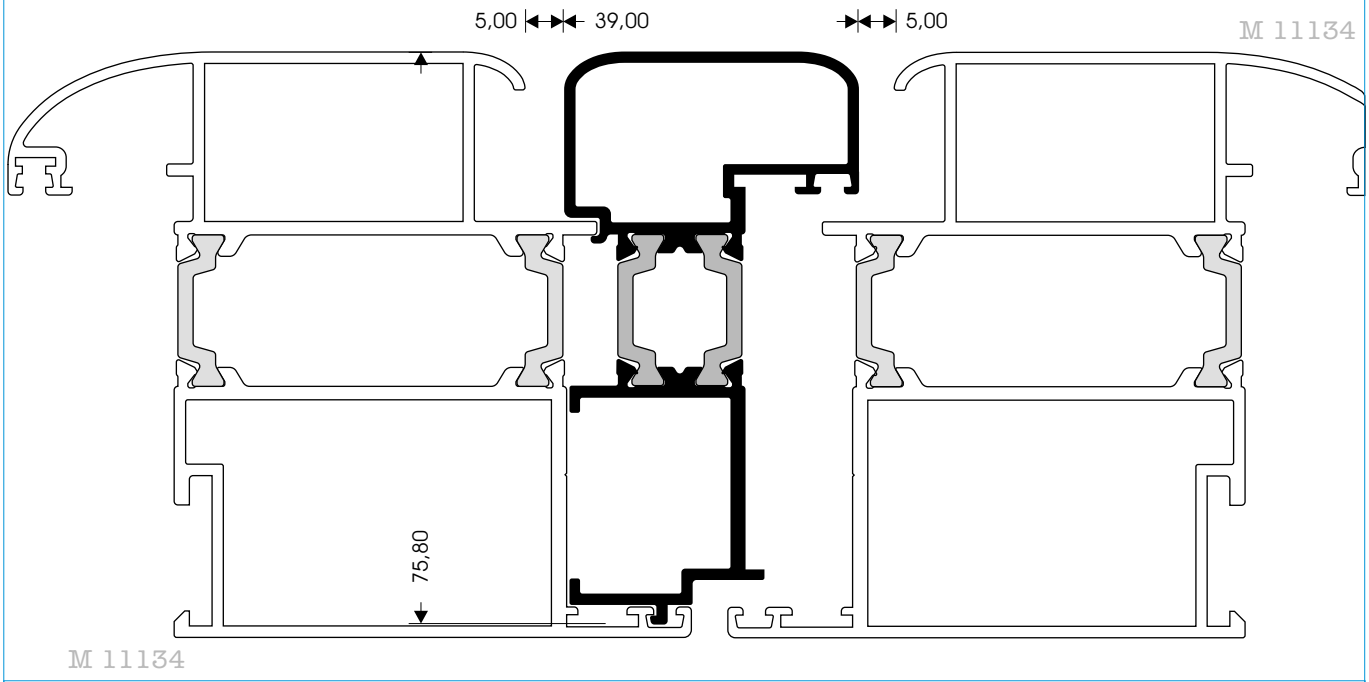

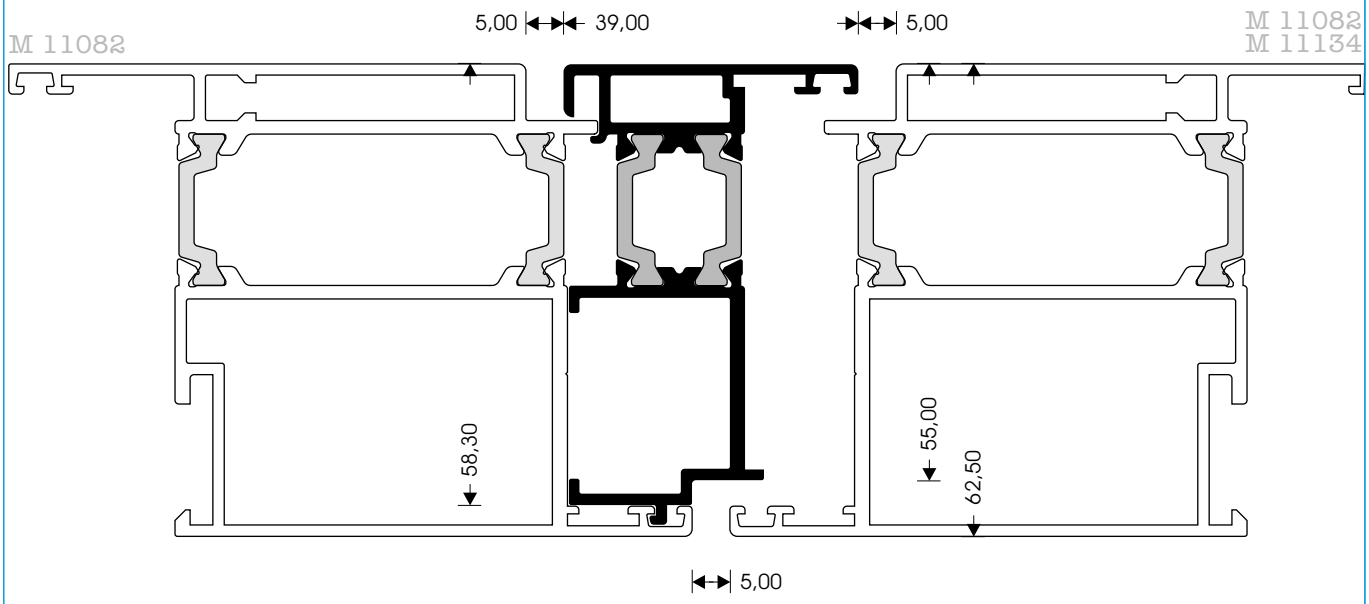

ADJOINING PROFILE OPENING INSIDE FLAT

Art.No	M 11156	
Surface area (mm)	primary	44
	perimeter	325
Moments of inertia	Ix_4 (cm)	2,88
	Jy (cm^4)	13,70
Weight (gr/m)	993	

O P I

Press corners		
Press corner		I
		O
Screw corner		I
		O
Nailed corner		I
		O

"T"-Connectors		
T connector		I
		O
Nail		I
		O
Screw		I
		O

Alignment corners	
O	I

Plastic end covers

O Outside part P Polyamide I Inside part

ADJOINING PROFILE OPENING INSIDE FLAT

Art.No	M 11158	Weight (gr/m)	1018
Surface area (mm)	primary	48	
	perimeter	272	
Moments of inertia	Ix_4 (cm)	2,93	
	Jy (cm^4)	16,02	

O P I

Press corners			"T"-Connectors		
Press corner		I O	T connector		I O
Screw corner		I O	Nail		I O
Nailed corner		I O	Screw		I O
Alignment corners			Plastic end covers		
O	I				

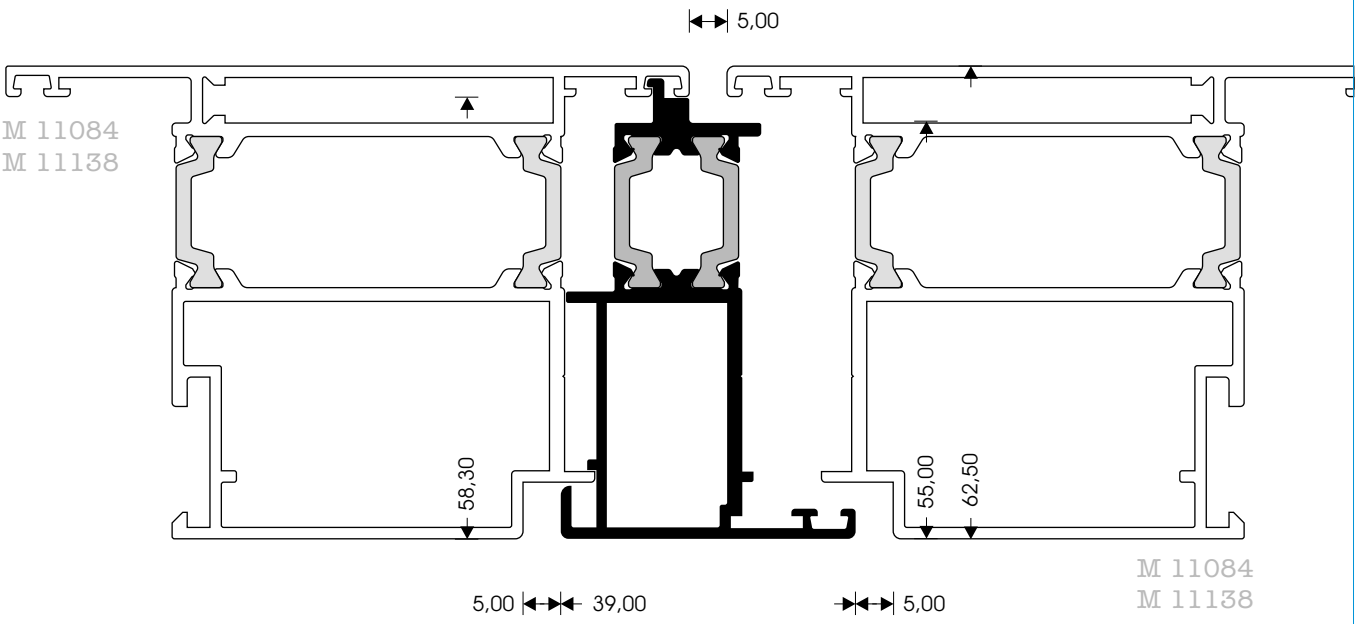

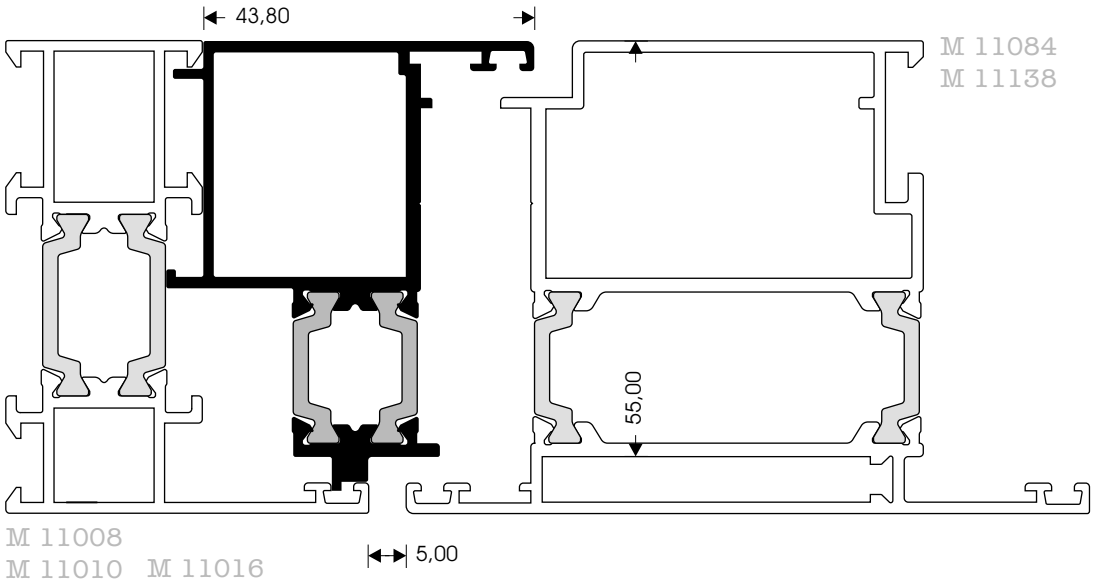

SUPPLEMENTARY PROFILE FOR DOORS OPENING OUTSIDE

Art.No	M 11162	Weight (gr/m)	1073
Surface area (mm)	primary	53	
	perimeter	277	
Moments of inertia	Ix_4 (cm)	5,03	
	Jy (cm^4)	16,15	

O P I

Press corners			"T"-Connectors		
Press corner		I O	T connector		I O
Screw corner		I O	Nail		I O
Nailed corner		I O	Screw		I O
Alignment corners			Plastic end covers		
O	I				

O Outside part P Polyamide I Inside part

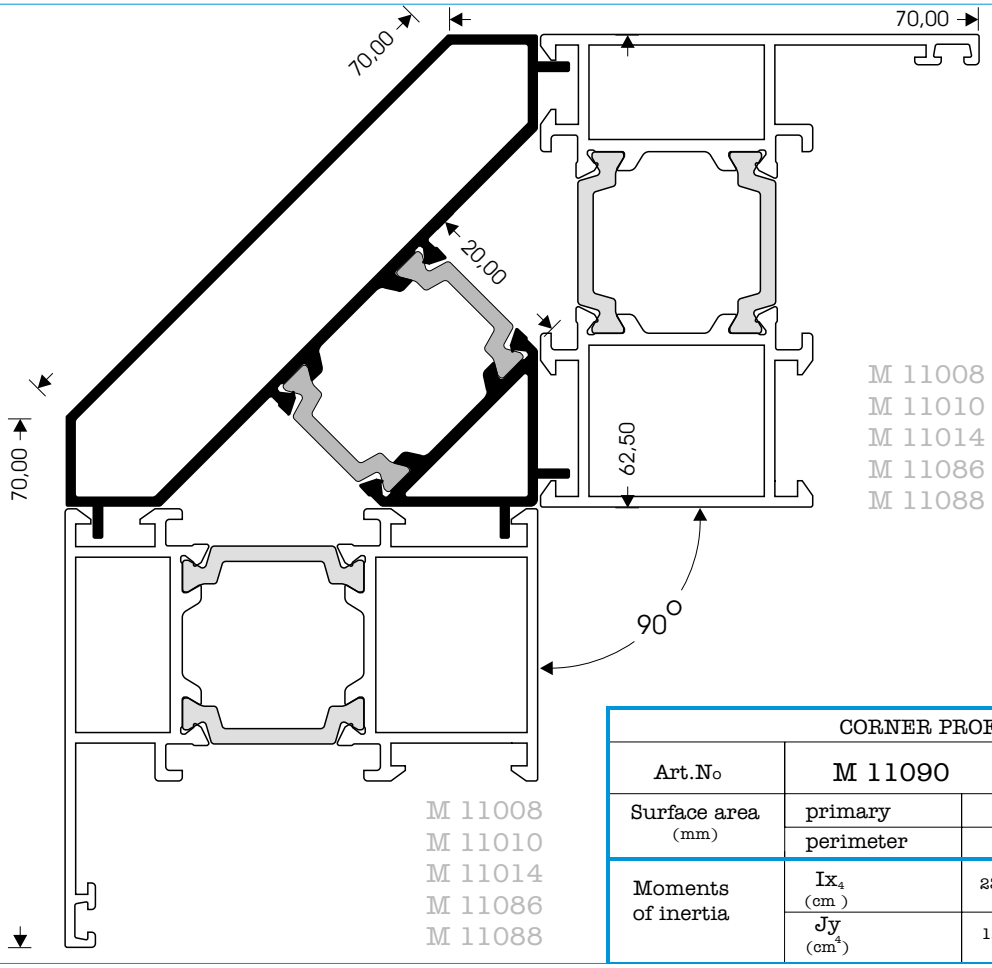

CORNER PROFILE 90°				
Art.No	M 11090		Weight (gr/m)	1347
Surface area (mm)	primary	95		
	perimeter	293		
Moments of inertia	Ix_4 (cm)	23,72		
	Jy (cm^4)	12,50		

O P I

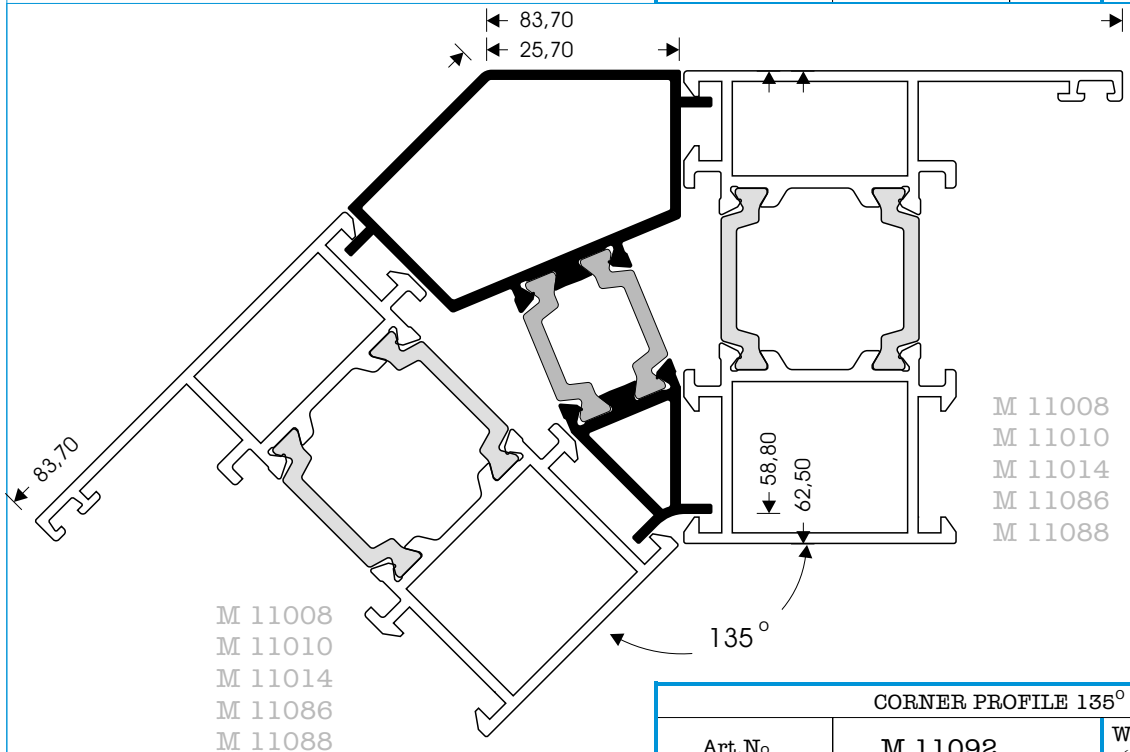

CORNER PROFILE 135°				
Art.No	M 11092		Weight (gr/m)	991
Surface area (mm)	primary	52		
	perimeter	232		
Moments of inertia	Ix_4 (cm)	5,01		
	Jy (cm^4)	12,70		

O P I

O Outside part P Polyamide I Inside part

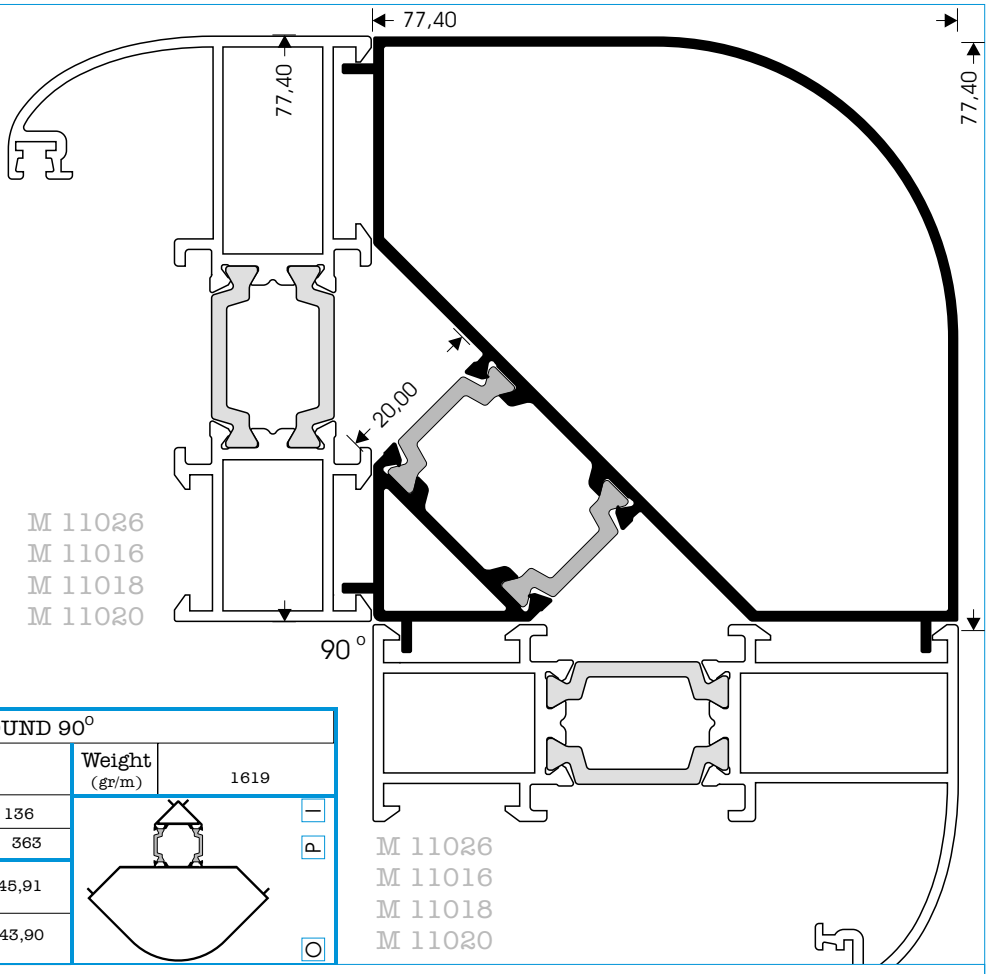

CORNER PROFILE ROUND 90°				
Art.No	M 11096		Weight (gr/m)	1619
Surface area (mm)	primary	136		
	perimeter	363		
Moments of inertia	Ix_4 (cm)	45,91		
	Jy (cm^4)	43,90		

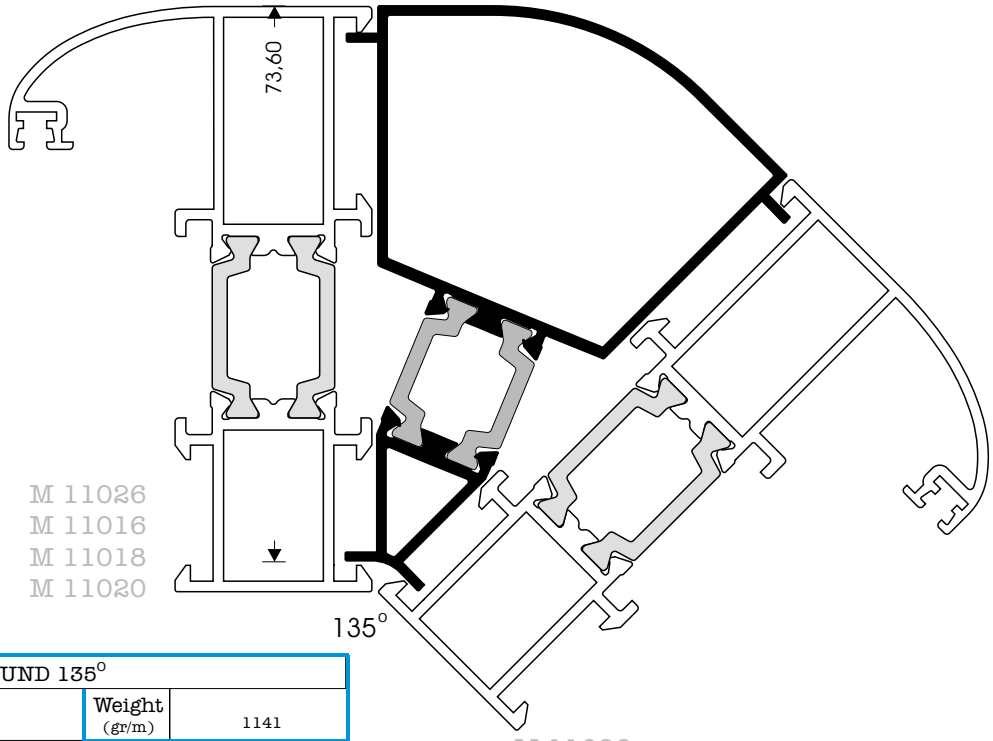

CORNER PROFILE ROUND 135°				
Art.No	M 11094		Weight (gr/m)	1141
Surface area (mm)	primary	62		
	perimeter	272		
Moments of inertia	Ix_4 (cm)	9,16		
	Jy (cm^4)	24,18		

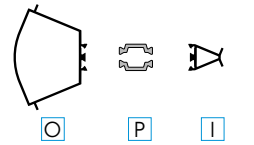

O Outside part P Polyamide I Inside part

CIRCULAR COLUMN FOR VARIABLE ANGLES				
Art.No	M 11178		Weight (gr/m)	1251
Surface area (mm)	primary	48		
	perimeter	272		
Moments of inertia	Ix_4 (cm)	2,93		
	Jy (cm^4)	16,02		

O P I

Press corners			"T"-Connectors		
Press corner		I	T connector		I
		O			O
Screw corner		I	Nail		I
		O			O
Nailed corner		I	Screw		I
		O			O
Alignment corners			Plastic end covers		
O	I				

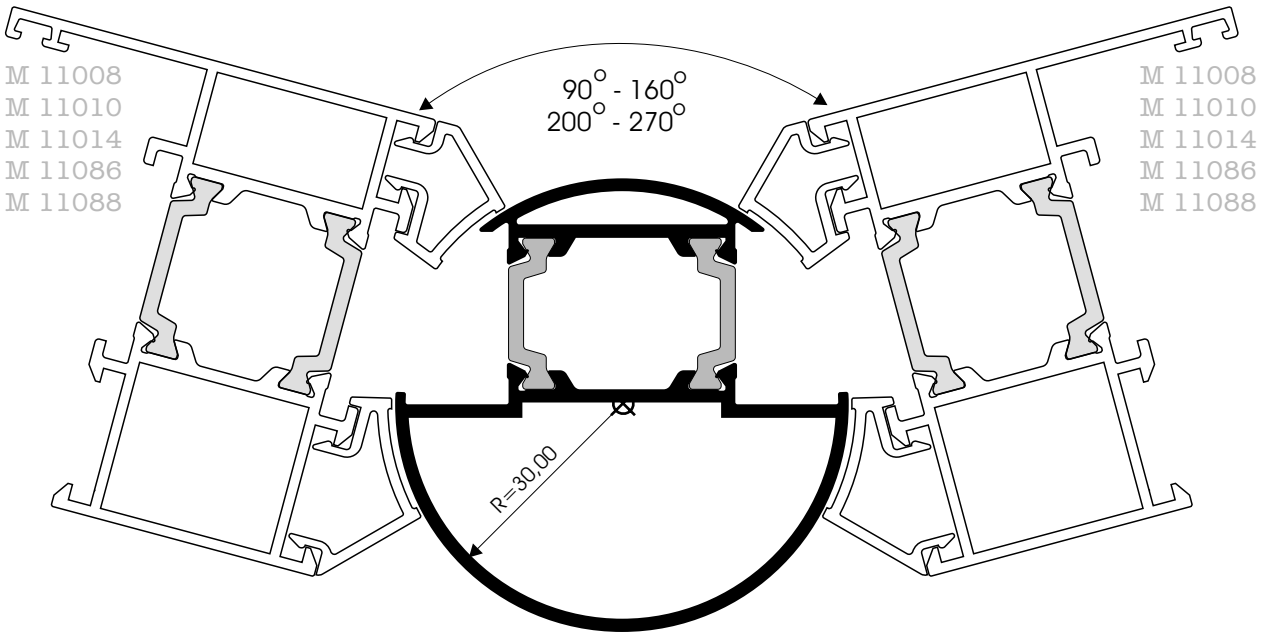

SUPPLEMENTARY PROFILE FOR DOORS OPENING INSIDE				
Art.No	M 11164		Weight (gr/m)	310
Surface area (mm)	primary	5		
	perimeter	143		
Moments of inertia	Ix (cm^4)	0,13		
	Jy (cm^4)	1,14		

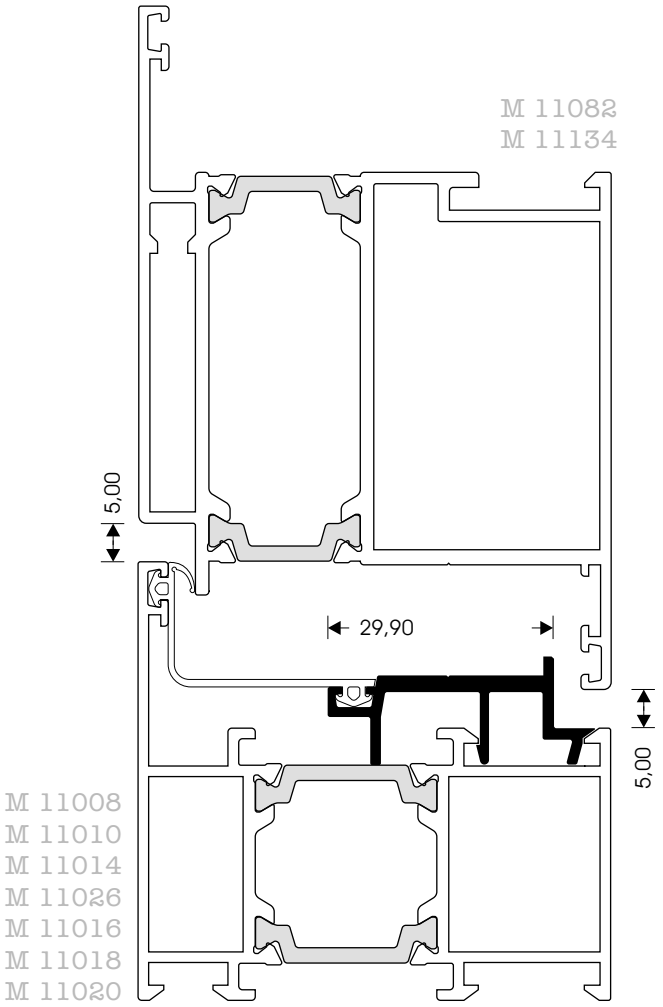

O Outside part P Polyamide I Inside part

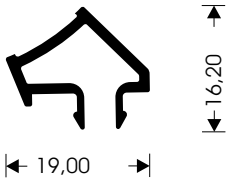

ADJOINING PROFILE FOR CIRCULAR COLUMN				
Art.No	M 11180		Weight (gr/m)	182
Surface area (mm)	primary	13		
	perimeter	102		
Moments of inertia	Ix (cm^4)	0,10		
	Jy (cm^4)	0,20		

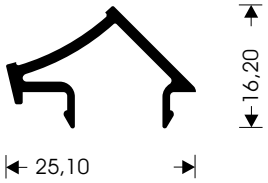

ADJOINING PROFILE FOR CIRCULAR COLUMN				
Art.No	M 11181		Weight (gr/m)	192
Surface area (mm)	primary	16		
	perimeter	105		
Moments of inertia	Ix (cm^4)	0,10		
	Jy (cm^4)	0,40		

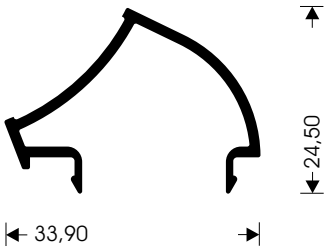

SUPPLEMENTARY PROFILE FOR DOORS OPENING INSIDE				
Art.No	M 11182		Weight (gr/m)	272
Surface area (mm)	primary	28		
	perimeter	150		
Moments of inertia	Ix (cm^4)	0,44		
	Jy (cm^4)	1,20		

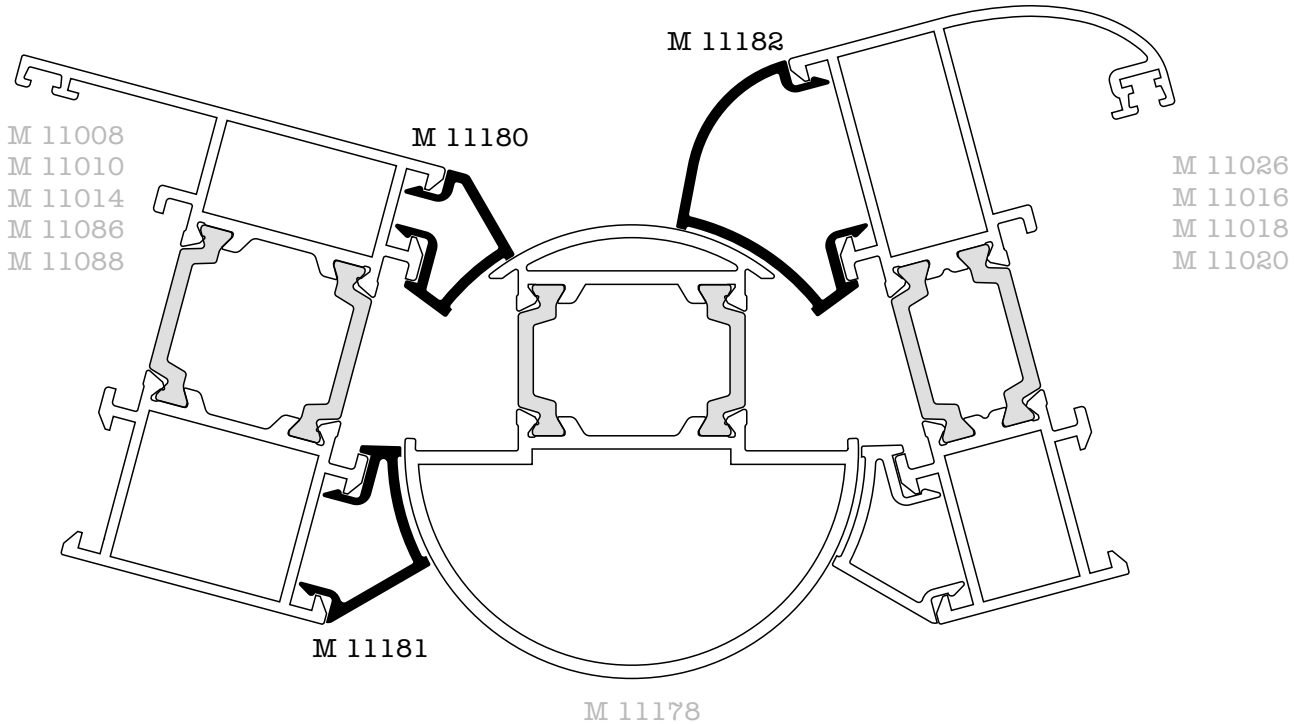

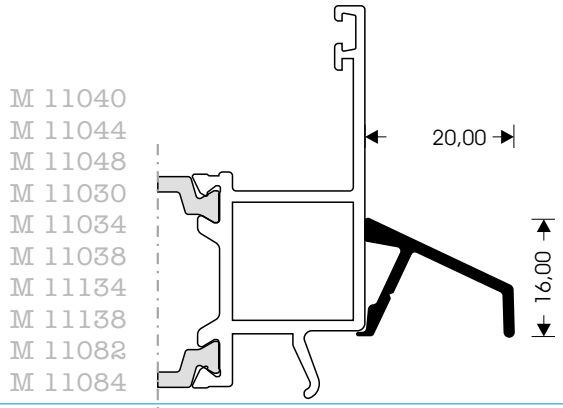

WATER CAP				
Art.No	M 9317		Weight (gr/m)	180
Surface area (mm)	primary	28		
	perimeter	85		
Moments of inertia	Ix (cm^4)	0,11		
	Jy (cm^4)	0,30		

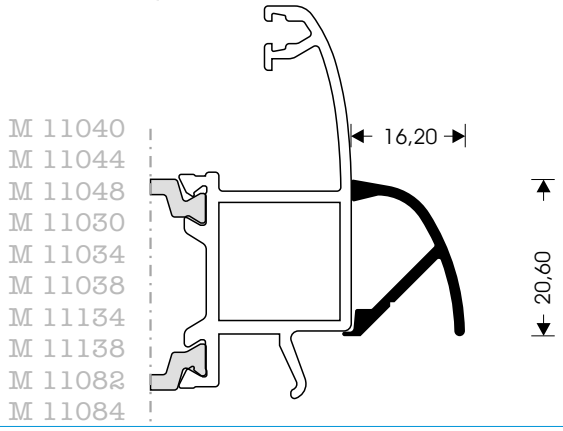

WATER CAP				
Art.No	M 11116		Weight (gr/m)	183
Surface area (mm)	primary	30		
	perimeter	93		
Moments of inertia	Ix (cm^4)	0,28		
	Jy (cm^4)	0,15		

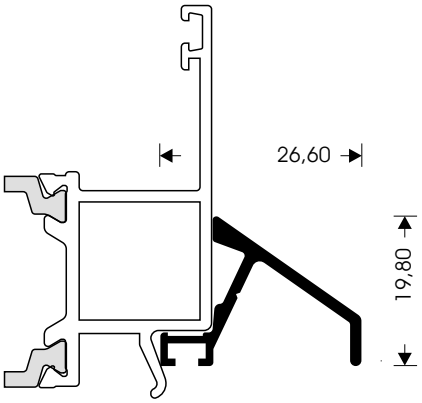

SUPPLEMENTARY PROFILE FOR DOORS OPENING INSIDE				
Art.No	M 11226		Weight (gr/m)	227
Surface area (mm)	primary	29		
	perimeter	115		
Moments of inertia	Ix (cm^4)	0,25		
	Jy (cm^4)	0,48		

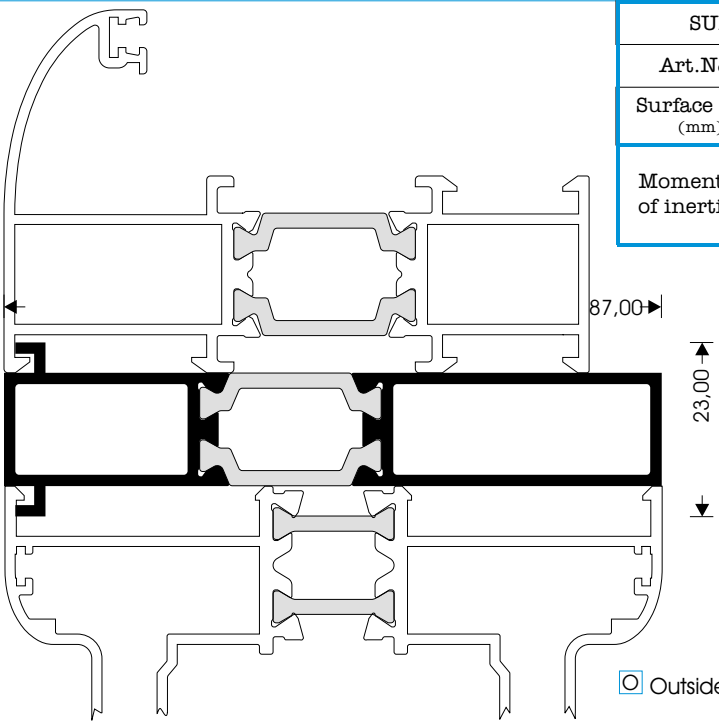

SUPPLEMENTARY PROFILE OPENING -SLIDING				
Art.No	M 11501		Weight (gr/m)	1053
Surface area (mm)	primary	29		
	perimeter	245		
Moments of inertia	Ix (cm^4)	1,69		
	Jy (cm^4)	27,65		

O Outside part P Polyamide I Inside part

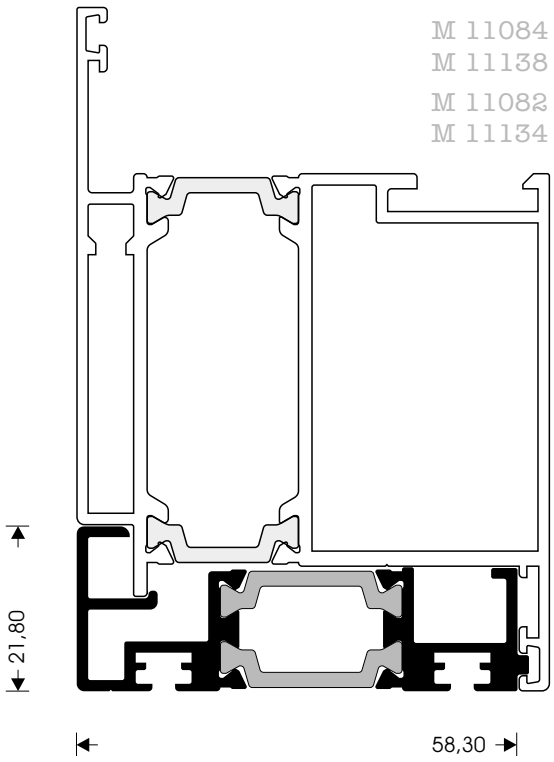

SUPPLEMENTARY PROFILE				
Art.No	M 11170		Weight (gr/m)	877
Surface area (mm)	primary	22		
	perimeter	316		
Moments of inertia	Ix (cm^4)	1,27		
	Jy (cm^4)	12,58		

O P I

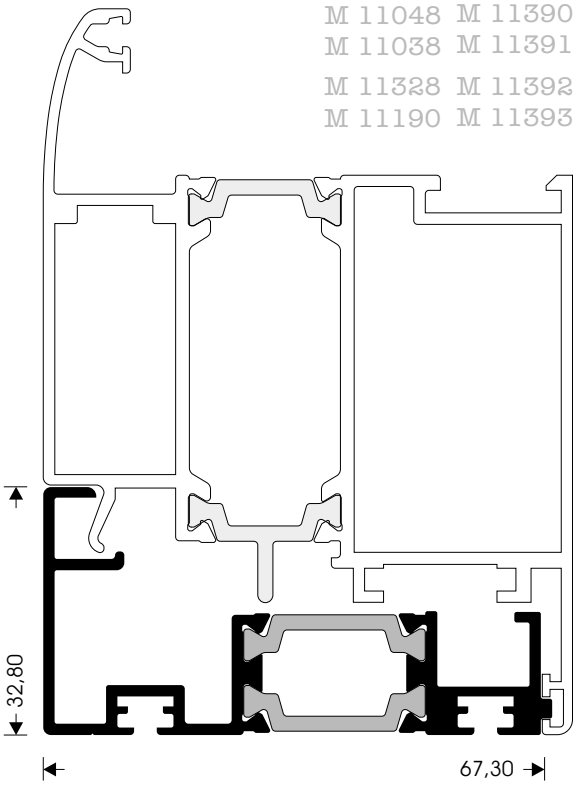

SUPPLEMENTARY PROFILE FOR DOORS				
Art.No	M 11270		Weight (gr/m)	977
Surface area (mm)	primary	33		
	perimeter	364		
Moments of inertia	Ix (cm^4)	2,53		
	Jy (cm^4)	18,26		

O P I

O Outside part P Polyamide I Inside part

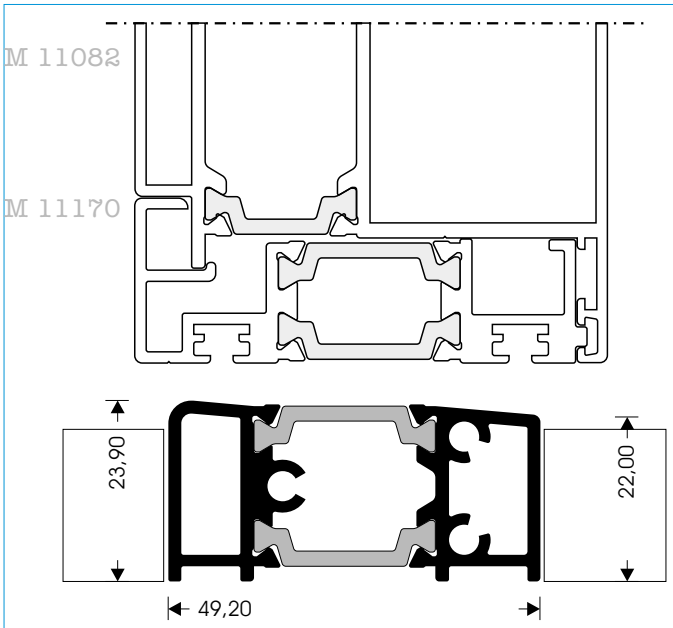

THRESHOLD FLUSH				
Art.No	M 11174		Weight (gr/m)	979
Surface area (mm)	primary	46		
	perimeter	168		
Moments of inertia	Ix (cm^4)	2,63		
	Jy (cm^4)	9,63		

Press corners			"T"-Connectors		
Press corner		I	T connector		I
		O			O
Screw corner		I	Nail		I
		O			O
Nailed corner		I	Screw	M5(x2)	I
		O		M5(x1)	O

Alignment corners		Plastic end covers	
O	I		

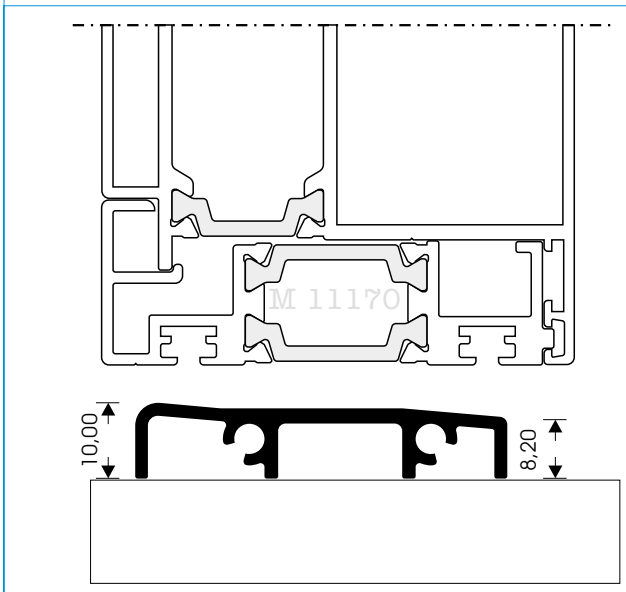

THRESHOLD FLUSH				
Art.No	M 11172		Weight (gr/m)	436
Surface area (mm)	primary	19		
	perimeter	174		
Moments of inertia	Ix (cm^4)	0,11		
	Jy (cm^4)	3,60		

Press corners			"T"-Connectors		
Press corner		I	T connector		I
		O			O
Screw corner		I	Nail		I
		O			O
Nailed corner		I	Screw	M5	I
		O		M5	O

Alignment corners		Plastic end covers	
O	I		

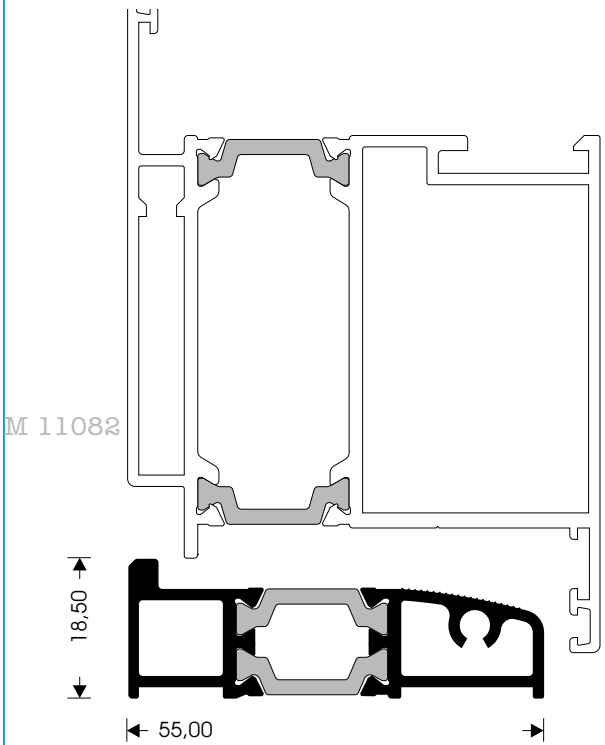

THRESHOLD				
Art.No	M 11274		Weight (gr/m)	815
Surface area (mm)	primary	25		
	perimeter	166		
Moments of inertia	Ix (cm^4)	0,94		
	Jy (cm^4)	8,88		

Press corners			"T"-Connectors		
Press corner		I	T connector		I
		O			O
Screw corner		I	Nail		I
		O			O
Nailed corner		I	Screw	M5	I
		O			O

Alignment corners		Plastic end covers	
O	I		

O Outside part P Polyamide I Inside part

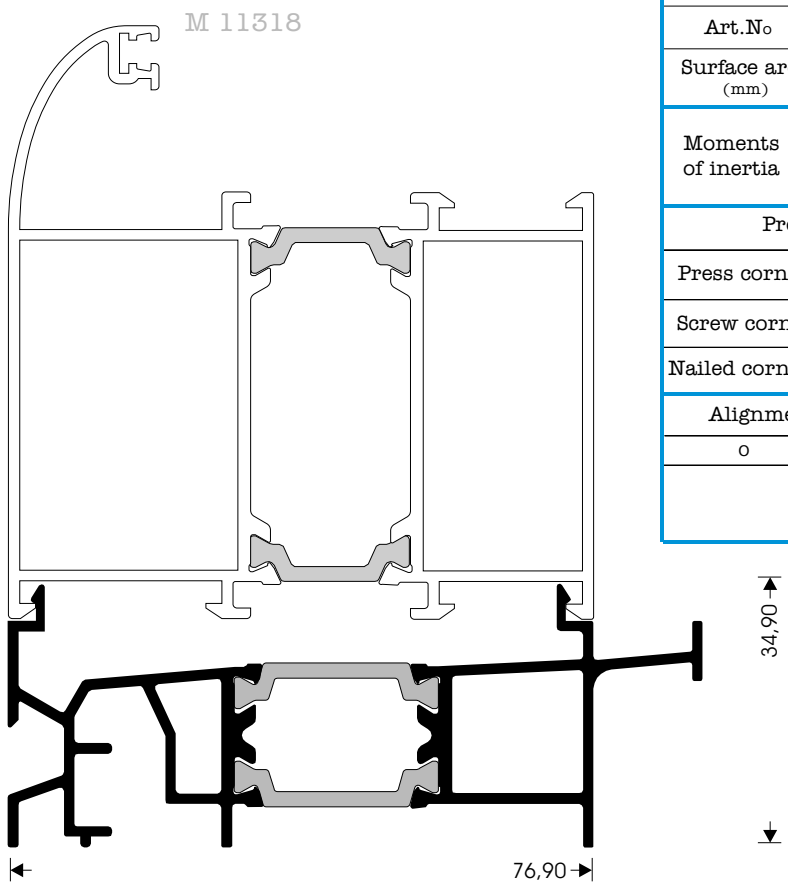

WATER EVACUATION PROFILE				
Art.No	M 11574		Weight (gr/m)	1311
Surface area (mm)	primary	60		
	perimeter	407		
Moments of inertia	Ix (cm^4)	3,57		
	Jy (cm^4)	35,64		

O P I

Press corners			"T"-Connectors		
Press corner		I	T connector		I
		O			O
Screw corner		I	Nail		I
		O			O
Nailed corner		I	Screw		I
		O			O

Alignment corners		Plastic end covers	
O	I		

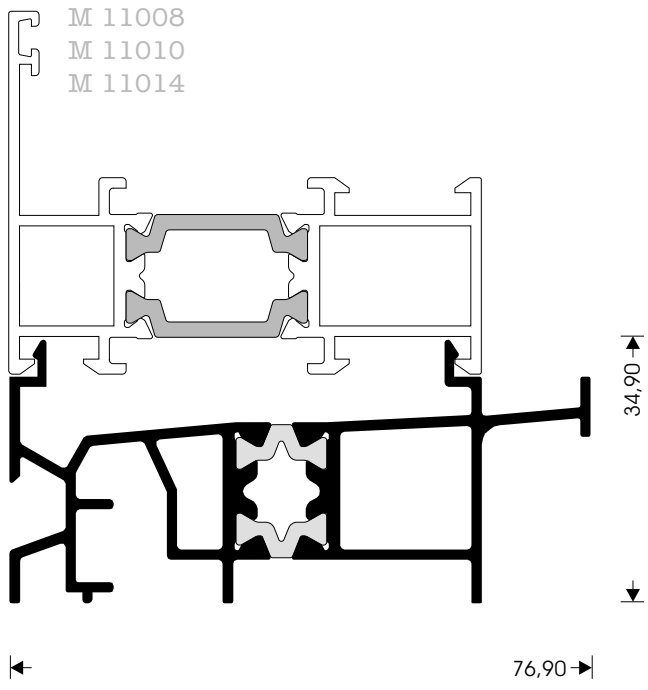

WATER EVACUATION PROFILE				
Art.No	M 11474		Weight (gr/m)	1245
Surface area (mm)	primary	60		
	perimeter	401		
Moments of inertia	Ix (cm^4)	3,27		
	Jy (cm^4)	20,47		

O P I

Press corners			"T"-Connectors		
Press corner		I	T connector		I
		O			O
Screw corner		I	Nail		I
		O			O
Nailed corner		I	Screw		I
		O			O

Alignment corners		Plastic end covers	
O	I		

O Outside part P Polyamide I Inside part

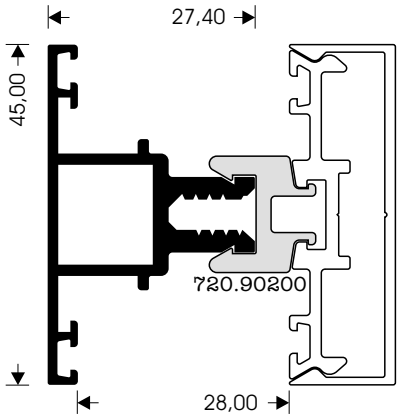

TRANSVERSE				
Art.No	M 11113		Weight (gr/m)	592
Surface area (mm)	primary	53		
	perimeter	211		
Moments of inertia	Ix (cm^4)	2,04		
	Jy (cm^4)	1,66		

Press corners			"T"-Connectors		
Press corner		I	T connector		I
		O			O
Screw corner		I	Nail		I
		O			O
Nailed corner		I	Screw	M5	I
		O			O

Alignment corners		Plastic end covers	
O	I		

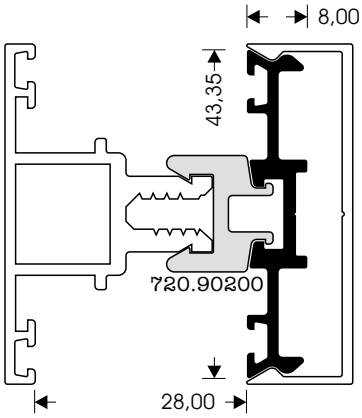

TRANSVERSE				
Art.No	M 11115		Weight (gr/m)	338
Surface area (mm)	primary			
	perimeter	153		
Moments of inertia	Ix (cm^4)	0,11		
	Jy (cm^4)	4,70		

Press corners			"T"-Connectors		
Press corner		I	T connector		I
		O			O
Screw corner		I	Nail		I
		O			O
Nailed corner		I	Screw		I
		O		M5	O

Alignment corners		Plastic end covers	
O	I		

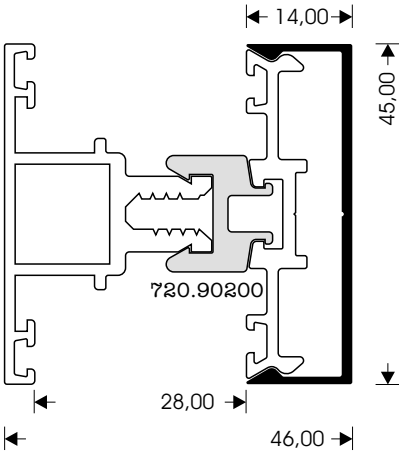

THRESHOLD				
Art.No	M 11114		Weight (gr/m)	249
Surface area (mm)	primary	73		
	perimeter	163		
Moments of inertia	Ix (cm^4)	0,15		
	Jy (cm^4)	4,05		

Press corners			"T"-Connectors		
Press corner		I	T connector		I
		O			O
Screw corner		I	Nail		I
		O			O
Nailed corner		I	Screw		I
		O		M5	O

Alignment corners		Plastic end covers	
O	I		

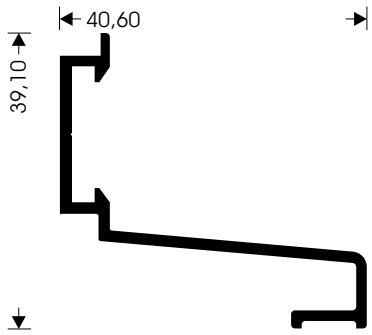

DRIP SILL SMALL				
Art.No	M 11475		Weight (gr/m)	373
Surface area (mm)	primary	47		
	perimeter	85		
Moments of inertia	Ix (cm^4)	1,37		
	Jy (cm^4)	35,20		

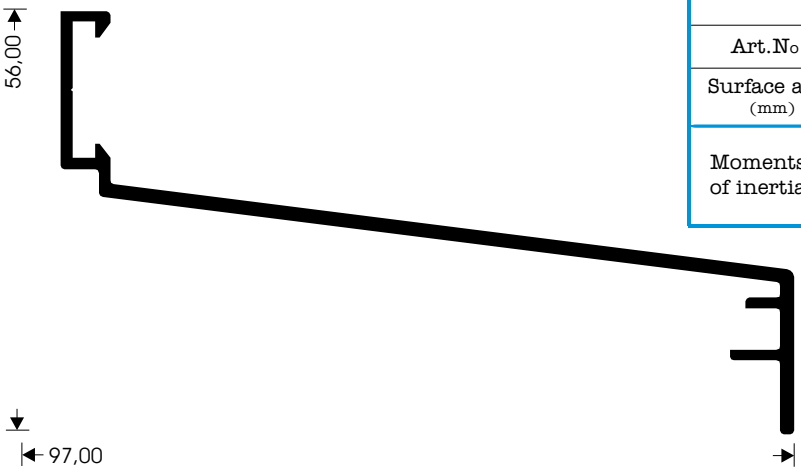

DRIP SILL MEDIUM				
Art.No	M 11476		Weight (gr/m)	751
Surface area (mm)	primary	115		
	perimeter	320		
Moments of inertia	Ix (cm^4)	3,79		
	Jy (cm^4)	35,20		

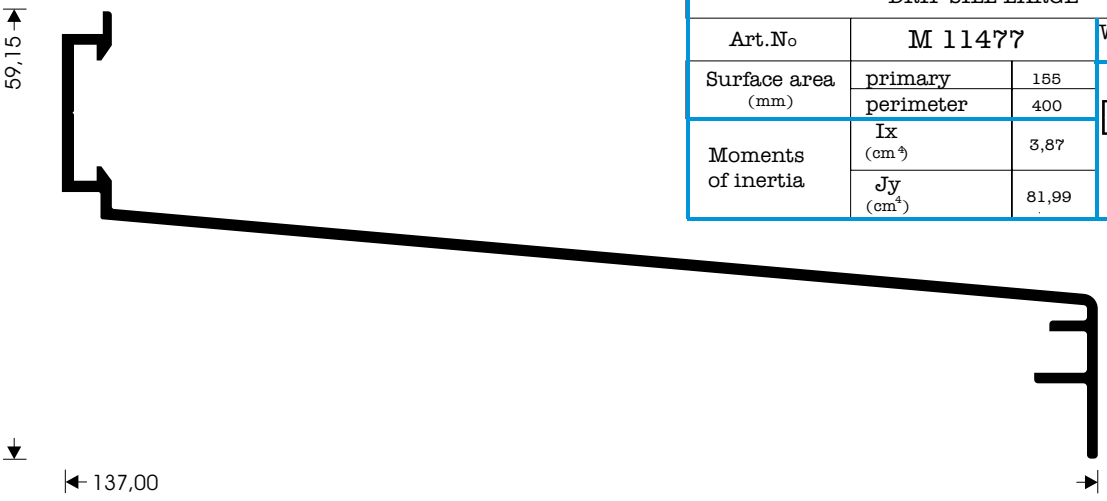

DRIP SILL LARGE				
Art.No	M 11477		Weight (gr/m)	934
Surface area (mm)	primary	155		
	perimeter	400		
Moments of inertia	Ix (cm^4)	3,87		
	Jy (cm^4)	81,99		

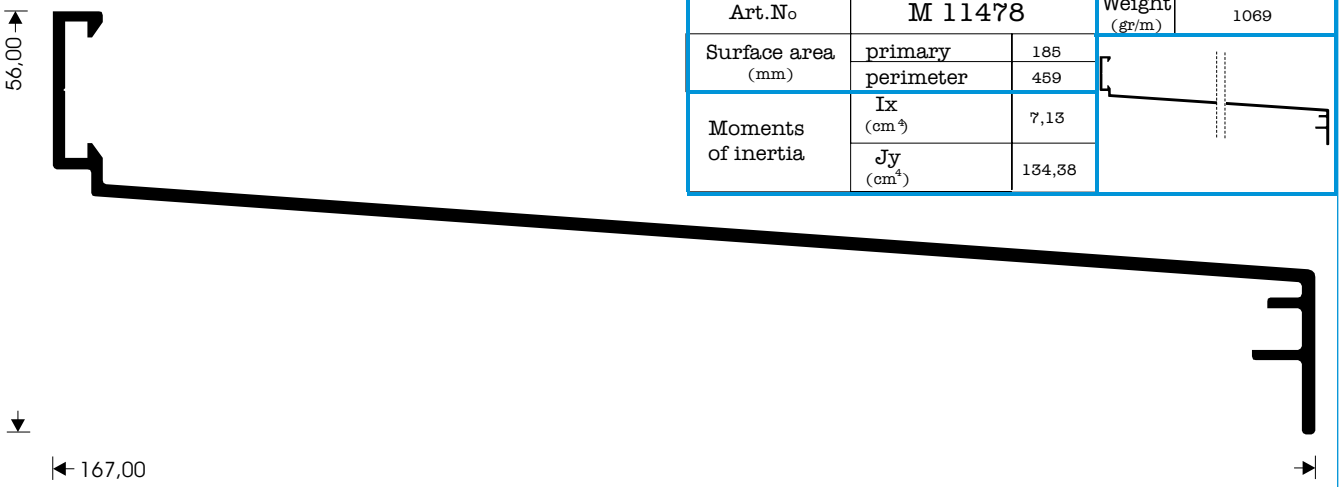

DRIP SILL RARGE				
Art.No	M 11478		Weight (gr/m)	1069
Surface area (mm)	primary	185		
	perimeter	459		
Moments of inertia	Ix (cm^4)	7,13		
	Jy (cm^4)	134,38		

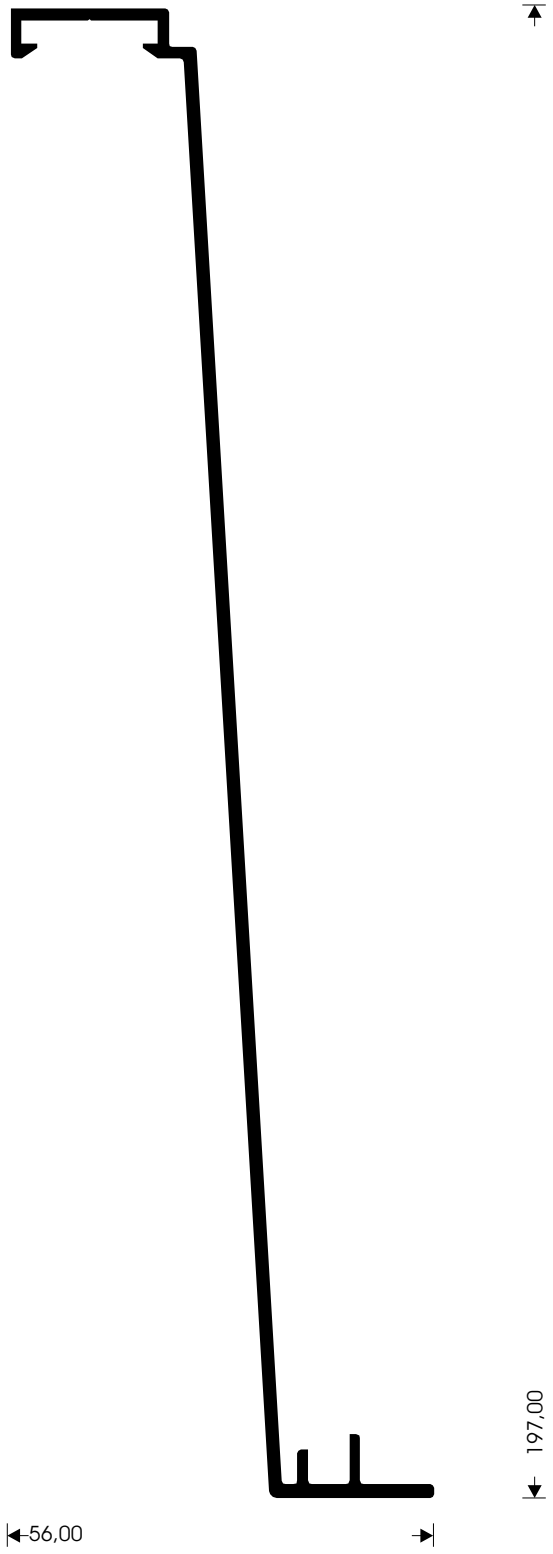

DRIP SILL LARGE				
Art.No	M 11479		Weight (gr/m)	1069
Surface area (mm)	primary	215		
	perimeter	519		
Moments of inertia	Ix (cm^4)	3,98		
	Jy (cm^4)	204,13		

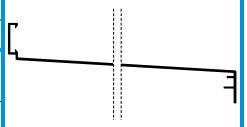

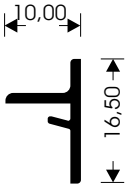

END CAP DRIP SILL				
Art.No	M 11473		Weight (gr/m)	103
Surface area (mm)	primary	16		
	perimeter	59		
Moments of inertia	Ix (cm^4)	0,06		
	Jy (cm^4)	0,03		

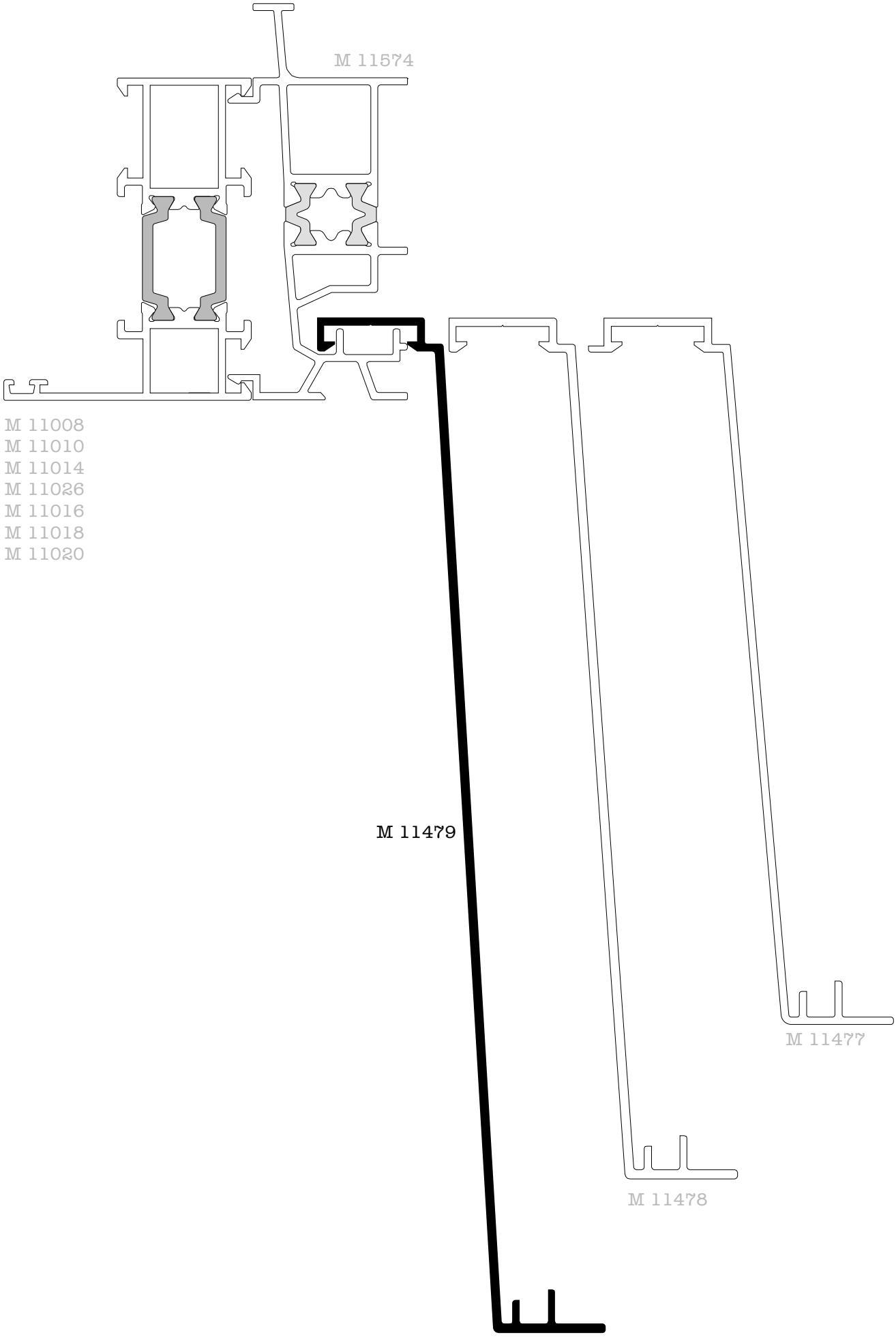
M 11574
M 11008
M 11010
M 11014
M 11026
M 11016
M 11018
M 11020
M 11479
M 11477
M 11478

M 11008
M 11010
M 11014
M 11026
M 11016
M 11018
M 11020

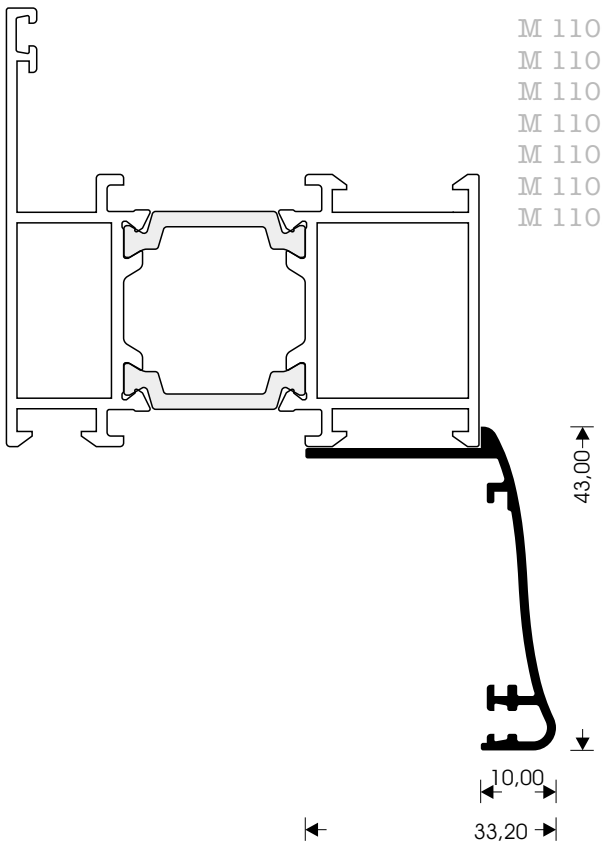

SUPPLEMENTARY PROFILE DECORATIVE				
Art.No	M 11118		Weight (gr/m)	324
Surface area (mm)	primary	50		
	perimeter	185		
Moments of inertia	Ix (cm^4)	2,79		
	Jy (cm^4)	0,82		

Press corners			"T"-Connectors		
Press corner		I	T connector		I
		O			O
Screw corner		I	Nail		I
		O			O
Nailed corner		I	Screw		I
		O			O

Alignment corners	Plastic end covers
180.11118 180.19000	

M 11008
M 11010
M 11014
M 11026
M 11016
M 11018
M 11020

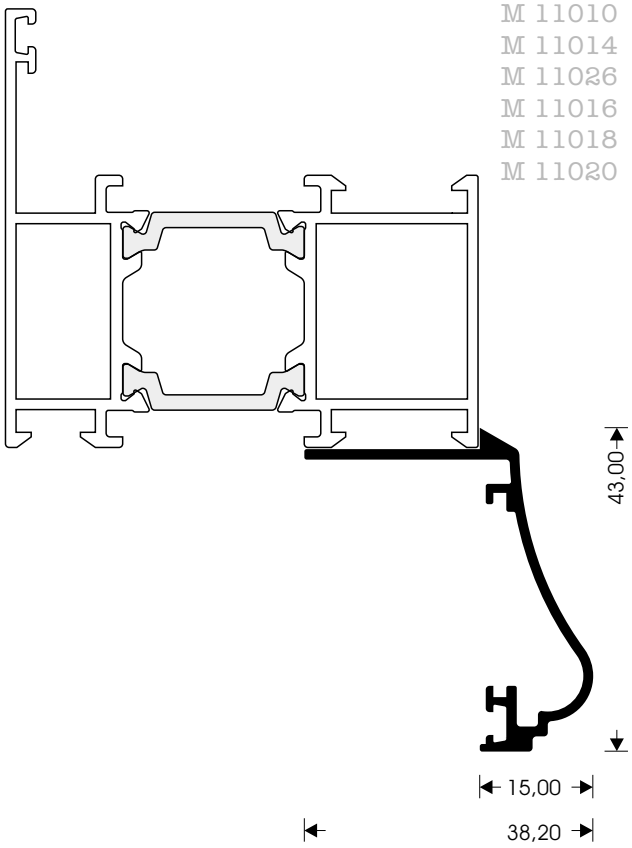

SUPPLEMENTARY PROFILE DECORATIVE				
Art.No	M 11119		Weight (gr/m)	379
Surface area (mm)	primary	56		
	perimeter	196		
Moments of inertia	Ix (cm^4)	3,28		
	Jy (cm^4)	1,11		

Press corners			"T"-Connectors		
Press corner		I	T connector		I
		O			O
Screw corner		I	Nail		I
		O			O
Nailed corner		I	Screw		I
		O			O

Alignment corners	Plastic end covers
180.11119 180.19000	

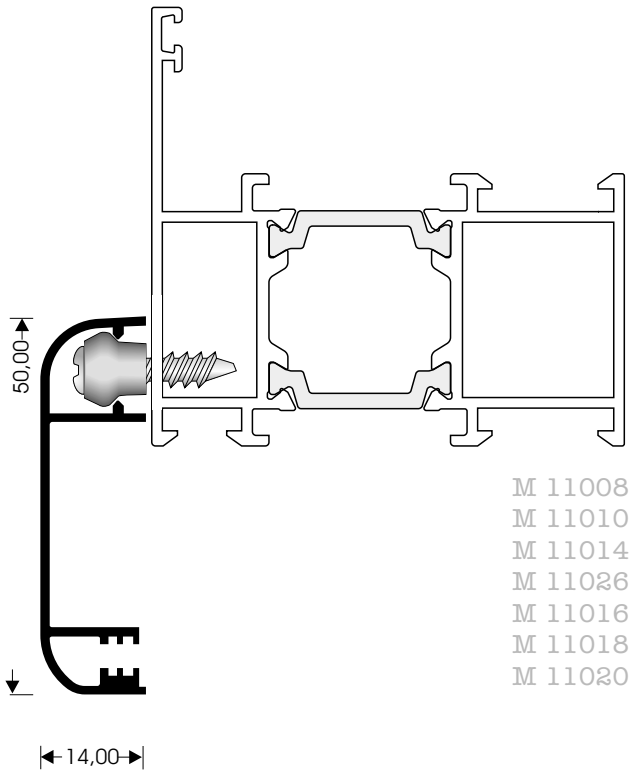

SUPPLEMENTARY PROFILE DECORATIVE

Art.No	M 216		Weight (gr/m)	375
Surface area (mm)	primary	71		
	perimeter	226		
Moments of inertia	Ix (cm^4)	3,92		
	Jy (cm^4)	0,27		

Press corners			"T"-Connectors		
Press corner		I	T connector		I
		O			O
Screw corner		I	Nail		I
		O			O
Nailed corner		I	Screw		I
		O			O

Alignment corners	Plastic end covers
180.19000	

470.00216 Plastics for screw

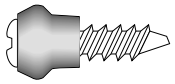

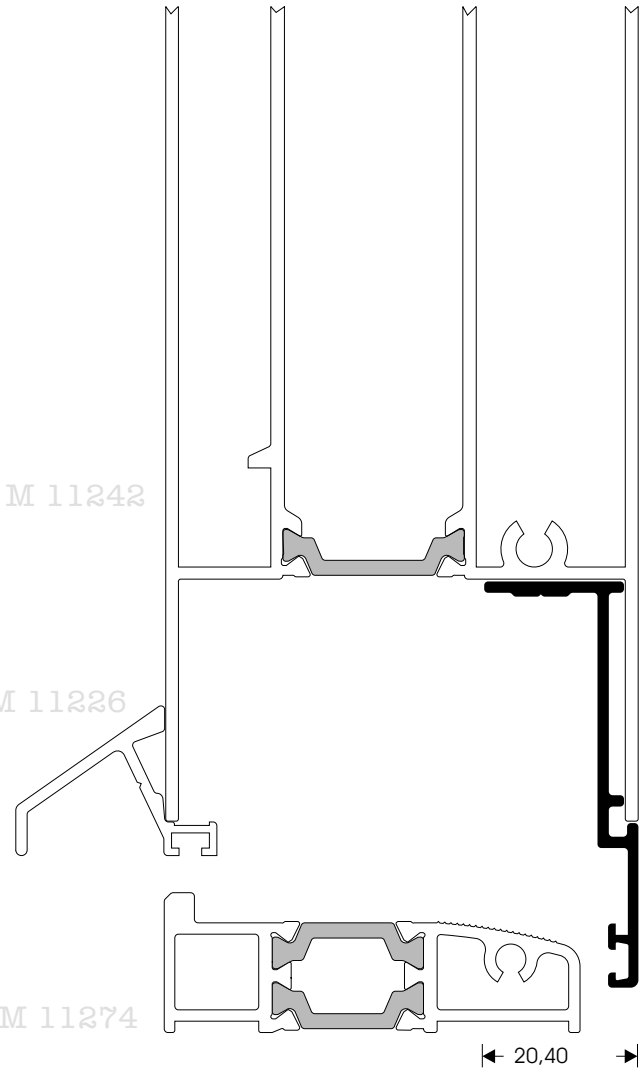

SUPPLEMENTARY PROFILE FOR KICKPLATE

Art.No	M 11218		Weight (gr/m)	345
Surface area (mm)	primary	26		
	perimeter	173		
Moments of inertia	Ix (cm^4)	4,10		
	Jy (cm^4)	0,27		

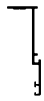

Press corners			"T"-Connectors		
Press corner		I	T connector		I
		O			O
Screw corner		I	Nail		I
		O			O
Nailed corner		I	Screw		I
		O			O

Alignment corners	Plastic end covers

M 11008
M 11010
M 11014
M 11026
M 11016
M 11018
M 11020

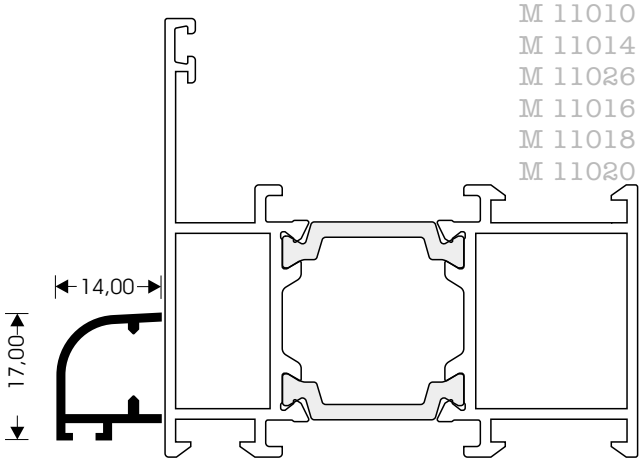

SUPPLEMENTARY PROFILE DECORATIVE				
Art.No	M 6001		Weight (gr/m)	148
Surface area (mm)	primary	27		
	perimeter	928		
Moments of inertia	Ix (cm^4)	0,17		
	Jy (cm^4)	0,10		

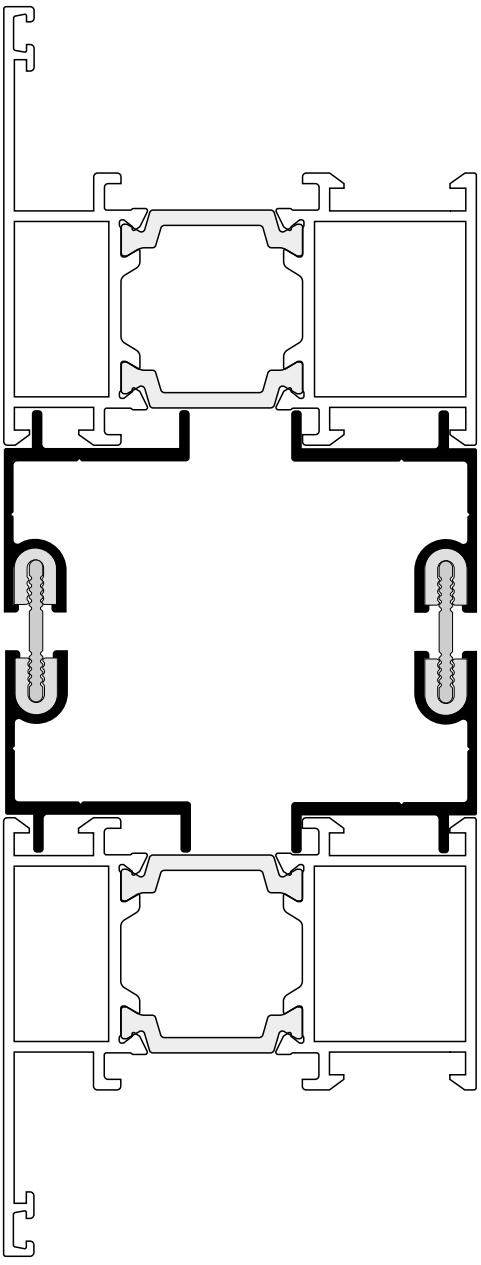

EXTENSION PROFILE				
Art.No	M 11480		Weight (gr/m)	282
Surface area (mm)	primary	27		
	perimeter	141		
Moments of inertia	Ix (cm^4)	0,62		
	Jy (cm^4)	0,65		

230.96000

Weight	98
perimeter	512

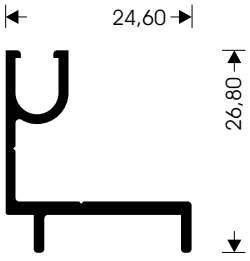

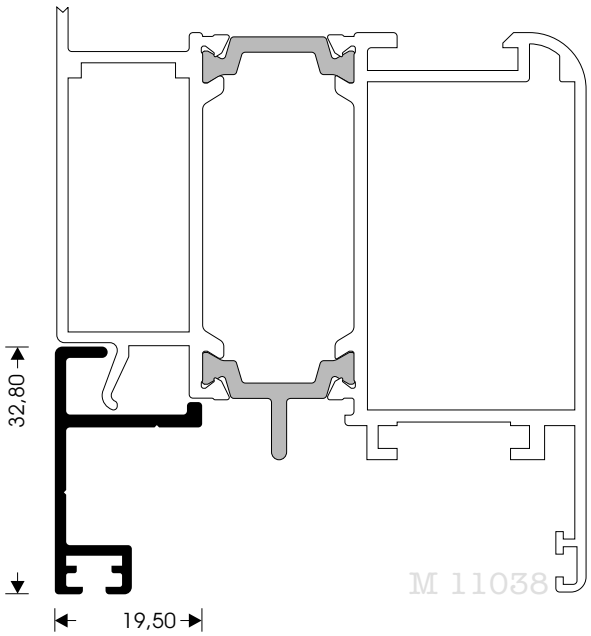

SUPPLEMENTARY PROFILE DECORATIVE				
Art.No	M 11472		Weight (gr/m)	314
Surface area (mm)	primary	33		
	perimeter	157		
Moments of inertia	Ix (cm^4)	1,20		
	Jy (cm^4)	0,35		

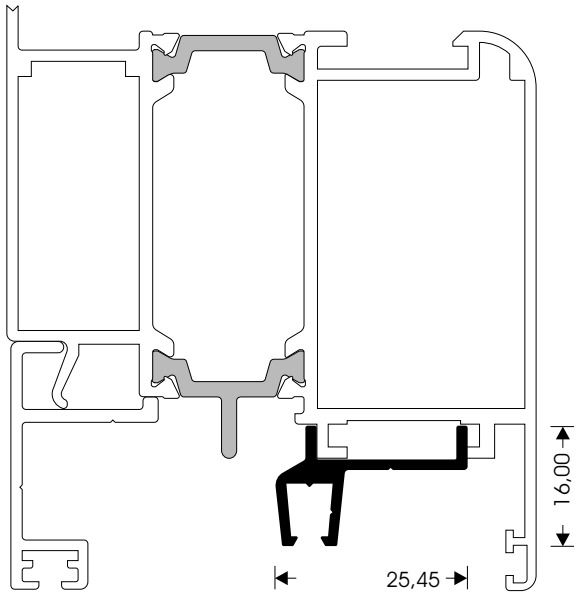

SUPPLEMENTARY PROFILE FOR DOORS				
Art.No	M 11471		Weight (gr/m)	231
Surface area (mm)	primary			
	perimeter	108		
Moments of inertia	Ix (cm^4)	0,12		
	Jy (cm^4)	0,51		

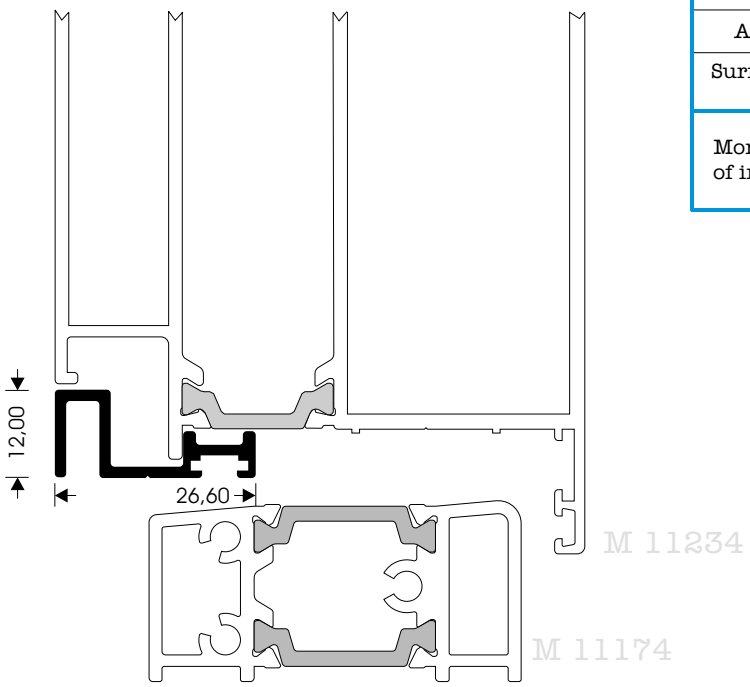

SUPPLEMENTARY PROFILE FOR DOORS				
Art.No	M 11281		Weight (gr/m)	232
Surface area (mm)	primary	12		
	perimeter	118		
Moments of inertia	Ix (cm^4)	0,11		
	Jy (cm^4)	0,65		

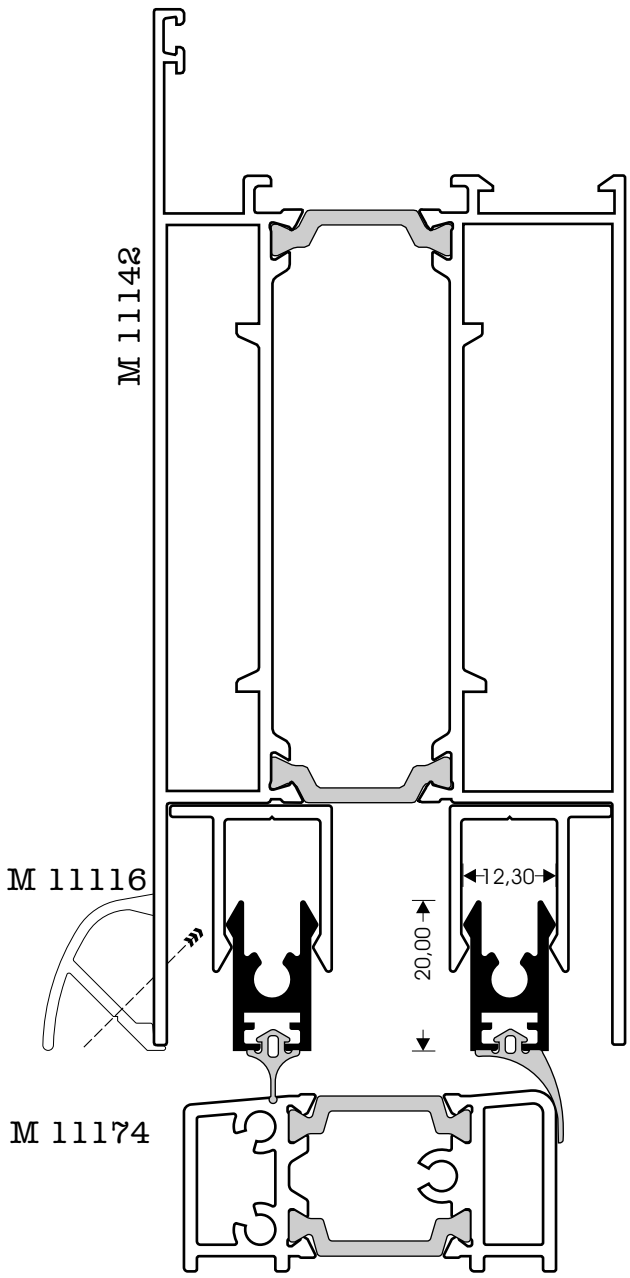

SUPPLEMENTARY PROFILE FOR DOORS				
Art.No	M 11210		Weight (gr/m)	283
Surface area (mm)	primary			
	perimeter	110		
Moments of inertia	Ix (cm^4)	0,27		
	Jy (cm^4)	0,15		

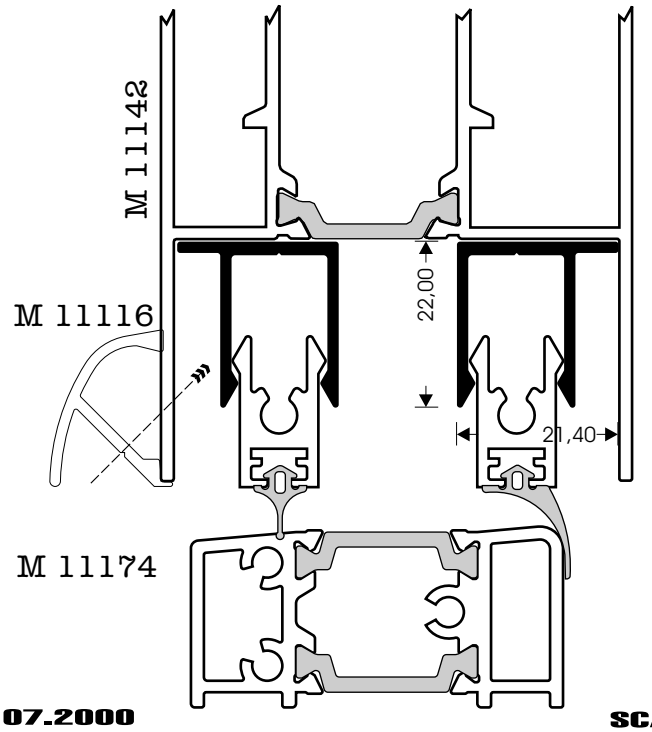

SUPPLEMENTARY PROFILE FOR DOORS				
Art.No	M 11211		Weight (gr/m)	268
Surface area (mm)	primary			
	perimeter	126		
Moments of inertia	Ix (cm^4)	0,50		
	Jy (cm^4)	0,46		

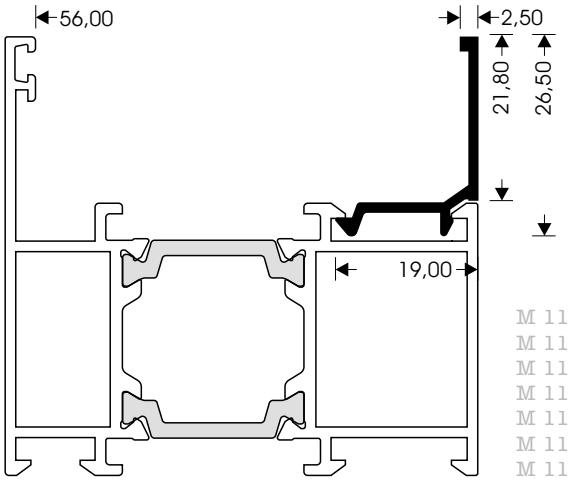

M 11008
M 11010
M 11014
M 11026
M 11016
M 11018
M 11020

GLAZING BEAD				
Art.No	M 9313		Weight (gr/m)	175
Surface area (mm)	primary	24		
	perimeter	94		
Moments of inertia	Ix (cm^4)	0,42		
	Jy (cm^4)	0,23		

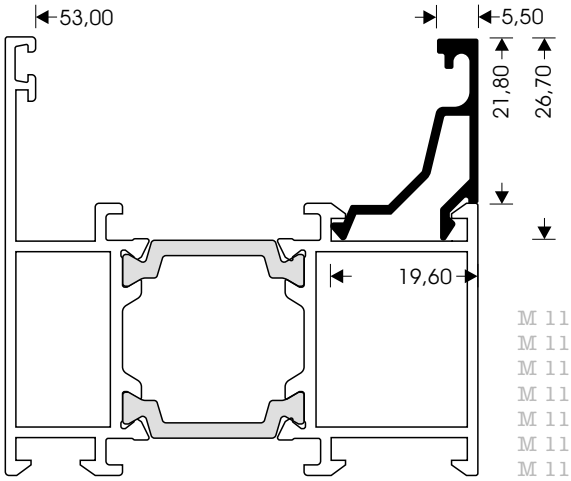

M 11008
M 11010
M 11014
M 11026
M 11016
M 11018
M 11020

GLAZING BEAD				
Art.No	M 946		Weight (gr/m)	233
Surface area (mm)	primary	27		
	perimeter	128		
Moments of inertia	Ix (cm^4)	0,58		
	Jy (cm^4)	0,24		

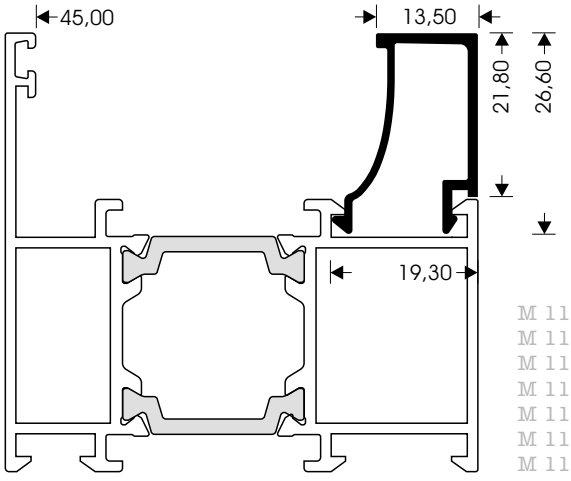

M 11008
M 11010
M 11014
M 11026
M 11016
M 11018
M 11020

GLAZING BEAD				
Art.No	M 9312		Weight (gr/m)	242
Surface area (mm)	primary	35		
	perimeter	143		
Moments of inertia	Ix (cm^4)	0,69		
	Jy (cm^4)	0,32		

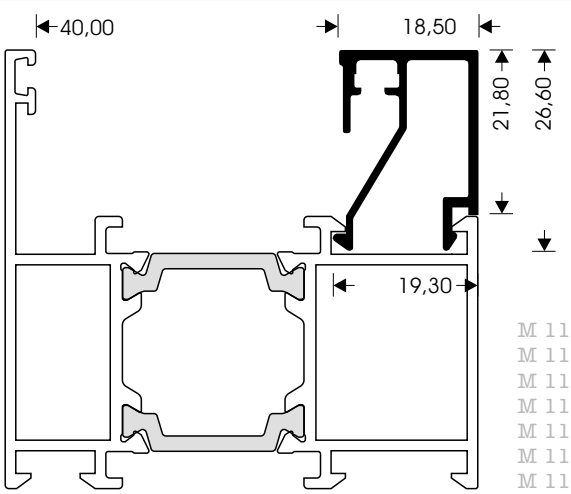

M 11008
M 11010
M 11014
M 11026
M 11016
M 11018
M 11020

GLAZING BEAD				
Art.No	M 11451		Weight (gr/m)	300
Surface area (mm)	primary	40		
	perimeter	178		
Moments of inertia	Ix (cm^4)	0,80		
	Jy (cm^4)	0,48		

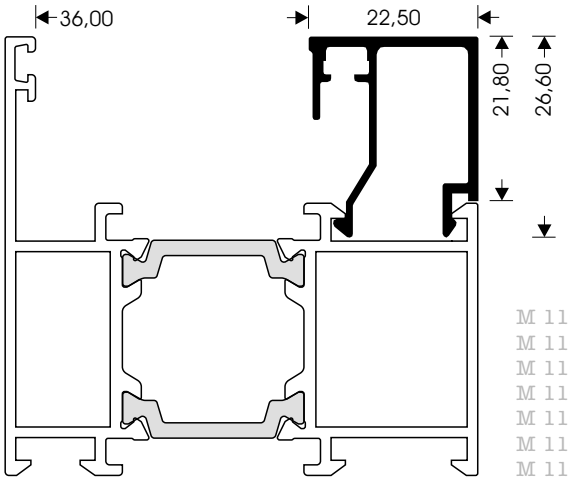

M 11008
M 11010
M 11014
M 11026
M 11016
M 11018
M 11020

GLAZING BEAD				
Art.No	M 11452		Weight (gr/m)	313
Surface area (mm)	primary	44		
	perimeter	183		
Moments of inertia	Ix (cm^4)	0,85		
	Jy (cm^4)	0,69		

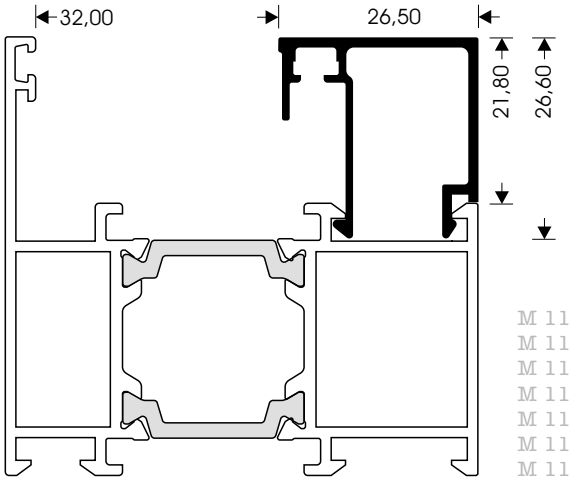

M 11008
M 11010
M 11014
M 11026
M 11016
M 11018
M 11020

GLAZING BEAD				
Art.No	M 11453		Weight (gr/m)	323
Surface area (mm)	primary	48		
	perimeter	189		
Moments of inertia	Ix (cm^4)	0,88		
	Jy (cm^4)	0,97		

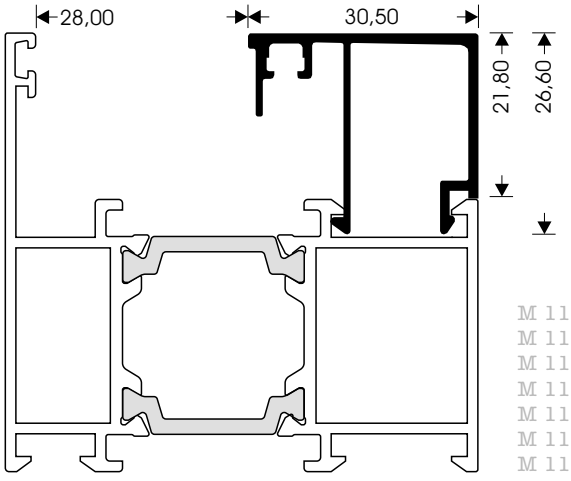

M 11008
M 11010
M 11014
M 11026
M 11016
M 11018
M 11020

GLAZING BEAD				
Art.No	M 11454		Weight (gr/m)	349
Surface area (mm)	primary	52		
	perimeter	206		
Moments of inertia	Ix (cm^4)	0,94		
	Jy (cm^4)	1,34		

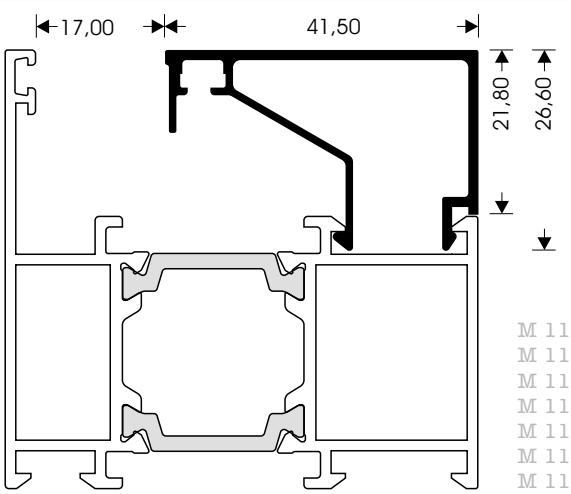

M 11008
M 11010
M 11014
M 11026
M 11016
M 11018
M 11020

GLAZING BEAD				
Art.No	M 11455		Weight (gr/m)	405
Surface area (mm)	primary	63		
	perimeter	238		
Moments of inertia	Ix (cm^4)	1,03		
	Jy (cm^4)	2,92		

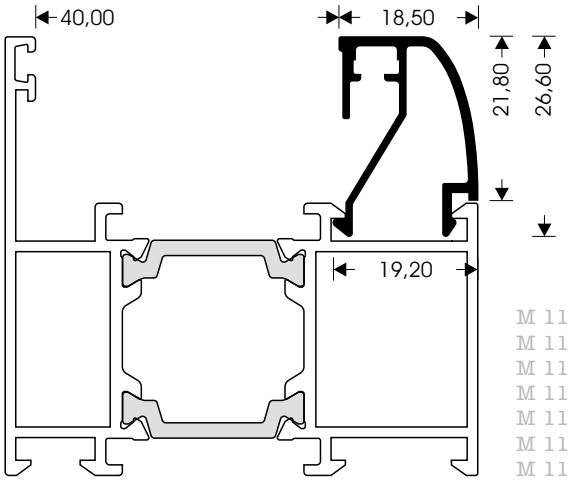

M 11008
M 11010
M 11014
M 11026
M 11016
M 11018
M 11020

GLAZING BEAD				
Art.No	M 11456		Weight (gr/m)	284
Surface area (mm)	primary	40		
	perimeter	169		
Moments of inertia	Ix (cm^4)	0,73		
	Jy (cm^4)	0,40		

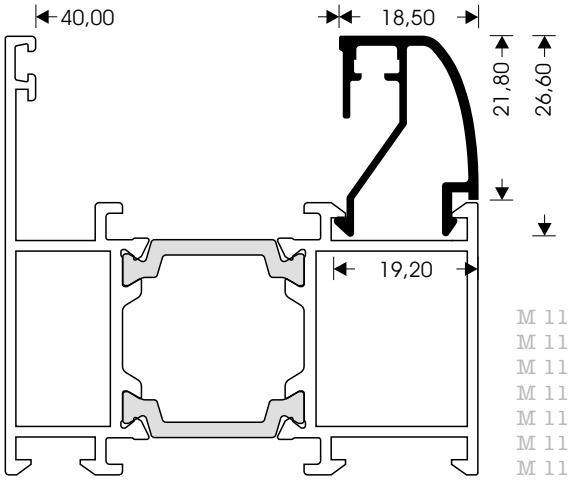

M 11008
M 11010
M 11014
M 11026
M 11016
M 11018
M 11020

GLAZING BEAD				
Art.No	M 11461		Weight (gr/m)	286
Surface area (mm)	primary	40		
	perimeter	170		
Moments of inertia	Ix (cm^4)	0,75		
	Jy (cm^4)	0,41		

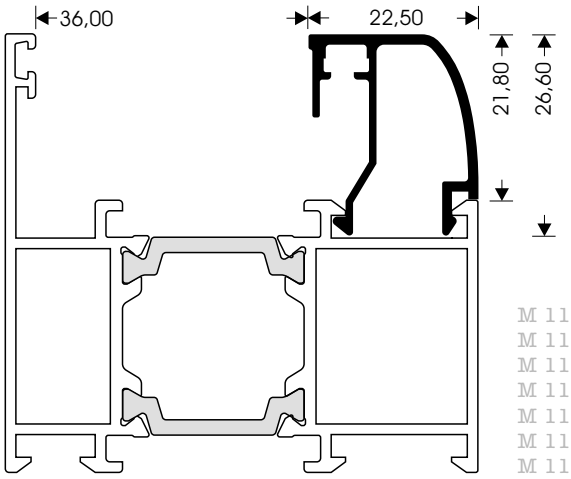

M 11008
M 11010
M 11014
M 11026
M 11016
M 11018
M 11020

GLAZING BEAD				
Art.No	M 11462		Weight (gr/m)	298
Surface area (mm)	primary	44		
	perimeter	175		
Moments of inertia	Ix (cm^4)	0.80		
	Jy (cm^4)	0.59		

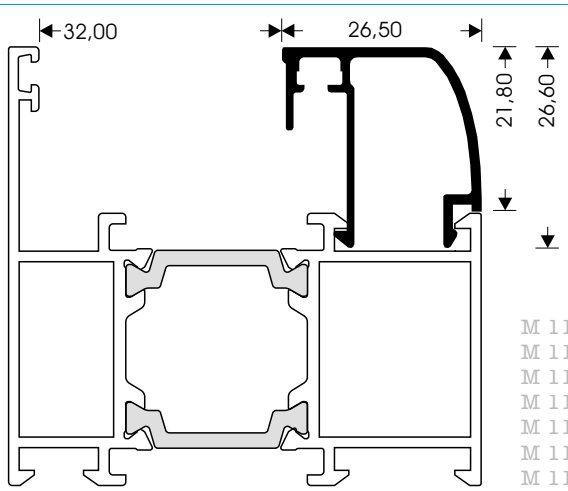

M 11008
M 11010
M 11014
M 11026
M 11016
M 11018
M 11020

GLAZING BEAD				
Art.No	M 11463		Weight (gr/m)	313
Surface area (mm)	primary	48		
	perimeter	182		
Moments of inertia	Ix (cm^4)	0,84		
	Jy (cm^4)	0,87		

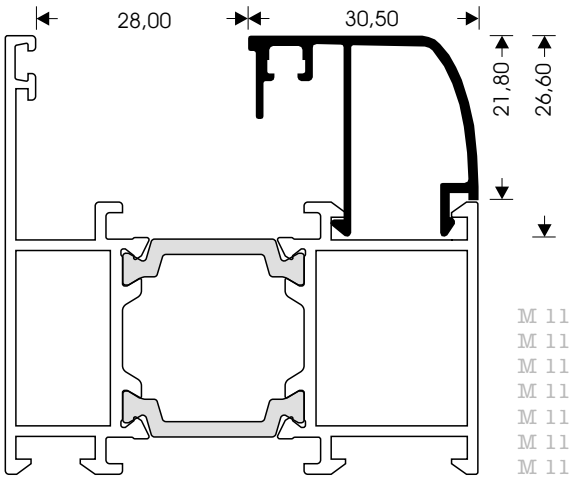

M 11008
M 11010
M 11014
M 11026
M 11016
M 11018
M 11020

GLAZING BEAD				
Art.No	M 11464		Weight (gr/m)	332
Surface area (mm)	primary	52		
	perimeter	197		
Moments of inertia	Ix (cm^4)	0,90		
	Jy (cm^4)	1,17		

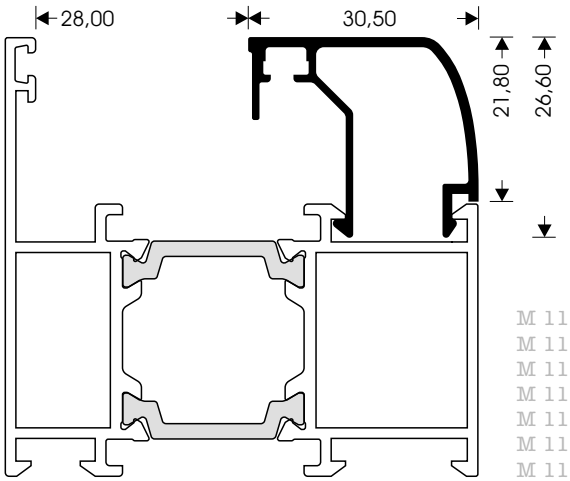

M 11008
M 11010
M 11014
M 11026
M 11016
M 11018
M 11020

GLAZING BEAD				
Art.No	M 11465		Weight (gr/m)	329
Surface area (mm)	primary	52		
	perimeter	193		
Moments of inertia	Ix (cm^4)	0,88		
	Jy (cm^4)	1,20		

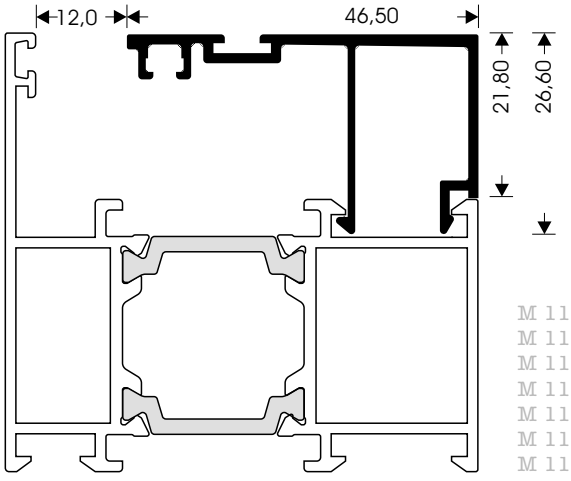

M 11008
M 11010
M 11014
M 11026
M 11016
M 11018
M 11020

GLAZING BEAD				
Art.No	M 11120		Weight (gr/m)	427
Surface area (mm)	primary	64		
	perimeter	241		
Moments of inertia	Ix (cm^4)	1,06		
	Jy (cm^4)	3,39		

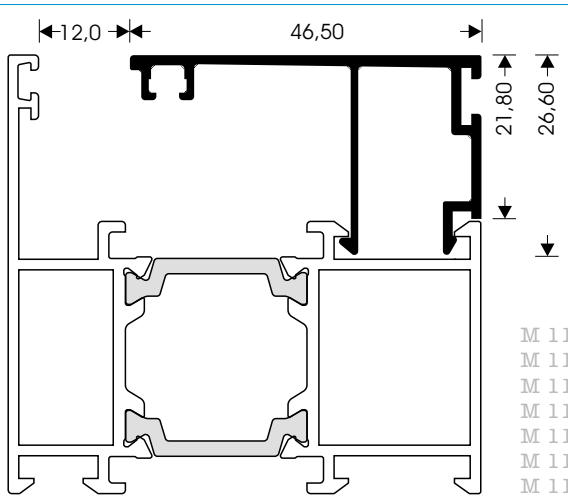

M 11008
M 11010
M 11014
M 11026
M 11016
M 11018
M 11020

GLAZING BEAD				
Art.No	M 11121		Weight (gr/m)	419
Surface area (mm)	primary	64		
	perimeter	237		
Moments of inertia	Ix (cm^4)	1,07		
	Jy (cm^4)	3,27		

SYSTEM 11000

"ALUTHERM PLUS"

ACCESSORIES

Art.-No	Article description	Page	Art.-No	Article description	Page
110.05***	EXTRUDED ALUMINIUM PRESS CORNER	IV/04	455.03627	HANDLE CASEMENT “MAXIMA”	IV/22
110.13***	EXTRUDED ALUMINIUM PRESS CORNER	IV/04	455.52204	HANDLE CASEMENT DOUBLE ACTION	IV/22
110.15***	EXTRUDED ALUMINIUM PRESS CORNER	IV/04	350.50000*	DOUBLE HINGE SIMPLE	IV/22
110.23***	EXTRUDED ALUMINIUM PRESS CORNER	IV/04	350.54000*	DOUBLE HINGE STANDARD	IV/23
110.33***	EXTRUDED ALUMINIUM PRESS CORNER	IV/05	350.54002*	DOUBLE HINGE STANDARD	IV/23
110.38***	EXTRUDED ALUMINIUM PRESS CORNER	IV/05	350.50401*	KIT PAIR OF HINGES TILT-N-TURN 70 kg	IV/23
110.43***	EXTRUDED ALUMINIUM PRESS CORNER	IV/05	350.50501*	KIT PAIR OF HINGES T&T 70-150 kg	IV/24
110.57***	EXTRUDED ALUMINIUM PRESS CORNER	IV/06	350.50601*	KIT PAIR OF HING. FOR SEC. LEAF SIDE	IV/24
120.13***	MECHANICAL CORNER	IV/07	350.50604*	KIT PAIR OF HING.FOR SEC.LEAF SIDE	IV/24
120.23***	MECHANICAL CORNER	IV/07	350.50600*	KIT PAIR OF HINGES T&T 70-150kg	IV/25
120.33***	MECHANICAL CORNER	IV/07	360.67000*	KIT PAIR OF HINGES T&T 70kg	IV/25
120.43***	MECHANICAL CORNER	IV/07	360.26201*	KIT PAIR OF HINGES T&T 70-150 kg	IV/26
130.05156	EXTRUDED ALUMINIUM NAIL CORNER	IV/09	360.26401	KIT PAIR OFHINGES T&T 70-150kg	IV/26
130.13***	EXTRUDED ALUMINIUM NAIL CORNER	IV/09	390.50020	KIT BASIC FITTING MECHANISM	IV/29
130.15***	EXTRUDED ALUMINIUM NAIL CORNER	IV/09	390.00300	SCISSOR ARM 300mm FOR TILT&TURN	IV/29
130.23***	EXTRUDED ALUMINIUM NAIL CORNER	IV/09	390.00460	SCISSOR ARM 600mm FOR TILT-N-TURN	IV/30
130.33***	EXTRUDED ALUMINIUM NAIL CORNER	IV/10	390.00501	ADDITIONAL SCISSOR	IV/30
130.43***	EXTRUDED ALUMINIUM NAIL CORNER	IV/10	390.50110	ADDITIONAL LOCKSET	IV/31
180.11801	PLASTIC ALIGMENT SQUARE	IV/11	474.22010	CENTRAL LATCH KIT FOR COUPLED WING	IV/31
180.11118	PLASTIC ALIGMENT SQUARE	IV/11	470.55101	ALUMINIUM LATCH FOR TRANSOM	IV/31
180.11119	PLASTIC ALIGMENT SQUARE	IV/11	170.60561	ALUM. ANGLE FOR GL. BEAD M11461	IV/34
180.25005	PLASTIC ALIGMENT SQUARE	IV/11	170.60562	ALUM. ANGLE FOR GL. BEAD M11462	IV/34
180.25006	PLASTIC ALIGMENT SQUARE	IV/11	170.60563	ALUM. ANGLE FOR GL. BEAD M11463	IV/34
180.25008	PLASTIC ALIGMENT SQUARE	IV/12	170.60564	ALUM. ANGLE FOR GL. BEAD M11464	IV/34
180.25010	PLASTIC ALIGMENT SQUARE	IV/12	350.00230	MECHANISM FOR PIVOT WINDOW	IV/36
180.25150	PLASTIC ALIGMENT SQUARE	IV/12	350.00003	MECHANISM FOR “ALLEZ-RETOUR”	IV/37
180.25016	PLASTIC ALIGMENT SQUARE	IV/12	300.11058	PLASTIC END CAP FOR M11058	IV/38
180.25017	PLASTIC ALIGMENT SQUARE	IV/12	300.11258	PLASTIC END CAP FOR M11258	IV/38
180.25018	PLASTIC ALIGMENT SQUARE	IV/13	300.11558	PLASTIC END CAP FOR M11258	IV/38
180.25025	PLASTIC ALIGMENT SQUARE	IV/13	300.11156	PLASTIC END CAP FOR M11156	IV/39
180.25260	PLASTIC ALIGMENT SQUARE	IV/13	300.11158	PLASTIC END CAP FOR M11158	IV/39
180.25027	PLASTIC ALIGMENT SQUARE	IV/13	300.11198	PLASTIC END CAP FOR M11198	IV/39
180.25033	PLASTIC ALIGMENT SQUARE	IV/14	310.11170	PLASTIC END CAP FOR M11170	IV/40
180.20010	PLASTIC ALIGMENT SQUARE	IV/14	310.11270	PLASTIC END CAP FOR M11270	IV/40
180.19000	STEEL ALIGMENT SQUARE	IV/14	310.11274	PLASTIC END CAP FOR M11274	IV/41
852.40126	MILLING BIT FOR SRAIGHT “T”-PROFILES	IV/16	310.11082	PLASTIC ACCESSORIE FOR THRESHOLD	IV/41
852.12601	MILLING BIT FOR PROFILE M11362,M11366	IV/16	310.11226	PLASTIC END CAP FOR M11226	IV/41
852.12602	MILLING BIT FOR PROFILE M11188,M11078	IV/16	310.11474	SET OF PLASTICS FOR M11474	IV/42
160.11813	“T”-CONNECTOR FOR EXTERIOR CHAMBER	IV/18	310.11574	SET OF PLASTICS FOR M11574	IV/42
160.11823	“T”-CONNECTOR FOR EXTERIOR CHAMBER	IV/18	470.11477	PLASTIC CLIP FOR M11474	IV/42
160.11833	“T”-CONNECTOR FOR EXTERIOR CHAMBER	IV/18	471.00800	KICK PLATE SEALING-80mm	IV/47
160.11213	“T”-CONNECTOR FOR EXTERIOR CHAMBER	IV/18	471.00900	KICK PLATE SEALING-90mm	IV/47
160.11223	“T”-CONNECTOR FOR EXTERIOR CHAMBER	IV/19	471.01000	KICK PLATE SEALING-1000mm	IV/47
160.11233	“T”-CONNECTOR FOR EXTERIOR CHAMBER	IV/19	471.01100	KICK PLATE SEALING-1100mm	IV/48
470.11834	Nail	IV/19	290.00002	PLASTIC GLASING SPACER-2mm	IV/50
380.50113	HANDLE CASEMENT DOUBLE ACTION“MAXIMA”	IV/20	290.00003	PLASTIC GLASING SPACER-3mm	IV/50
380.50111	HANDLE CASEMENT DOUBLE ACTION“MAXIMA”	IV/20	290.00004	PLASTIC GLASING SPACER-4mm	IV/50
380.53000	CREMONE BOLTS “CORINE ORO”	IV/20	290.00005	PLASTIC GLASING SPACER-5mm	IV/50
380.54000	DOOR DOUBLE HANDLE ‘SUMO”	IV/21	460.11051	NICKEL PLATED PROFILE CILINDER 82mm	IV/51
455.30221	PAIR OF LEVER HANDLES “GLOBO”	IV/21	460.16000	NICKEL PLATED PROFILE CILINDER 86mm	IV/51
455.53020	PAIR OF LEVER HANDLES “CORINE ORO”	IV/21	440.76135	SAFETY LOCK 35mm SPRING LATCH	IV/51

Art.-No	Article description	Page
440.65135	SAFETY LOCK 35mm WITH ADJUSTABLE ROLLER	IV/51
485.16219	STRIKING PLATE FOR ELECTRICAL LOCKER	IV/51
PR.10	GLAZING GASKET PRESS-IN(EPDM)-10mm	IV/44
PR.8	GLAZING GASKET PRESS-IN(EPDM)-8mm	IV/44
PR.7	GLAZING GASKET PRESS-IN(EPDM)-7mm	IV/44
PR.6	GLAZING GASKET PRESS-IN(EPDM)-6mm	IV/44
PR.5	GLAZING GASKET PRESS-IN(EPDM)-5mm	IV/44
PR.4	GLAZING GASKET PRESS-IN(EPDM)-4mm	IV/44
PR.3	GLAZING GASKET PRESS-IN(EPDM)-3mm	IV/44
210.11000	CENTRAL SEAL(EPDM)	IV/44
200.68600	GLAZING GASKET EXTERIOR(EPDM)	IV/44
200.68610	GLAZING GASKET EXTERIOR (EPDM)	IV/44
200.68310	GLAZING GASKET PRESS-IN(EPDM)	IV/44
220.11002	GASKET INTERIOR SEAL(EPDM)	IV/44
220.11001	GASKET EXTERIOR SEAL(EPDM)	IV/44
200.01154	TERMAL ISOLATION GASKET(EPDM)	IV/44
250.15513	EXTERIOR ISOLATION GASKET(EPDM)	IV/44
250.15520	EXTERIOR ISOLATION GASKET(EPDM)	IV/44
250.15528	EXTERIOR ISOLATION GASKET(EPDM)	IV/44
250.11270	GASKET SEAL FOR EXTERIOR DOORS (EPDM)	IV/44
250.11170	GASKET SEAL FOR EXTERIOR DOORS (EPDM)	IV/44
250.11226	GASKET SEAL FOR EXTERIOR DOORS (EPDM)	IV/44
250.11164	GASKET SEAL FOR M11064 (EPDM)	IV/44
250.11120	GASKET SEAL FOR M11120(EPDM)	IV/44
220.60000	GASKET INTERIOR SEAL (EPDM)	IV/44
230.00959	GASKET INTERIOR SEAL (EPDM)	IV/44

Art.-No	Article description	Page
620.02012	BRUSH No12	IV/52
.**	AIR GLOU GUN	IV/52
.**	ALUMINIUM SQUARES BONDING AGENT	IV/52
.**	SILICONE GLASING	IV/52

CORNERS

Extruded aluminium press corners

Description	height chamber / width chamber	Application	Dimensions	Isometric view
Extruded aluminium press corner Color: mill finish			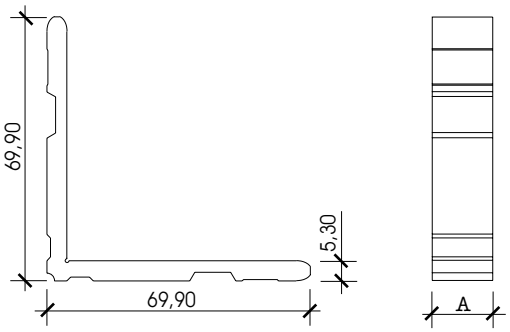	**110.05***** 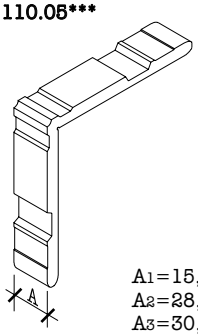 A1=15,60mm A2=28,30mm A3=30,00mm A4=37,50mm
	1)110.05156	For profiles M11030 , M11040, M11050 , M11217, M11320 , M11330, M11340 , M11350, M11370		
	2)110.05283	M11350		
	3)110.05300	M11340		
	4)110.05375	M11330		
Extruded aluminium press corner Color: mill finish			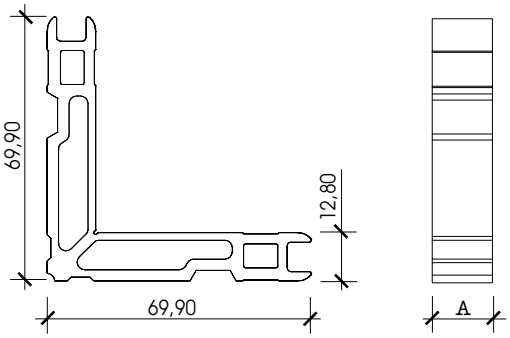	**110.13***** 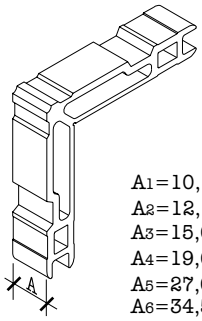 A1=10,10mm A2=12,10mm A3=15,60mm A4=19,60mm A5=27,00mm A6=34,50mm
	1)110.13101	For profiles M11080		
	2)110.13121	M11008 , M11080		
	3)110.13156	M11130		
	4)110.13196	M11008 , M11026		
	5)110.13270	M11026 , M11030 M11040		
	6)110.13345	M11320		
Extruded aluminium press corner Color: mill finish			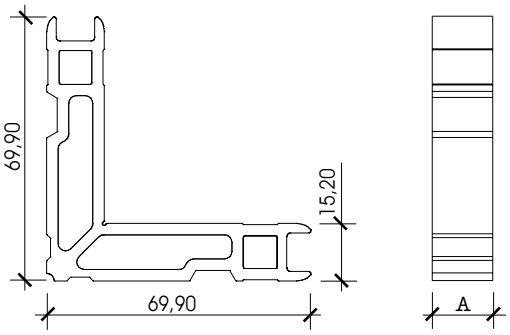	**110.15***** 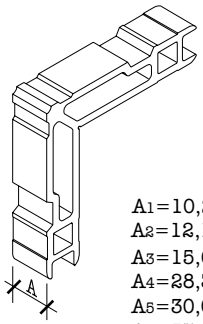 A1=10,20mm A2=12,10mm A3=15,60mm A4=28,30mm A5=30,00mm A6=37,50mm
	1)110.15102	For profiles M11076		
	2)110.15121	M11076		
	3)110.15156	M11034 , M11044 , M11216 , M11244 , M11324 , M11334 , M11344 , M11354 ,		
	4)110.15283	M11354		
	5)110.15300	M11370 , M11344.		
	6)110.15375	M11334		
Extruded aluminium press corner Color: mill finish			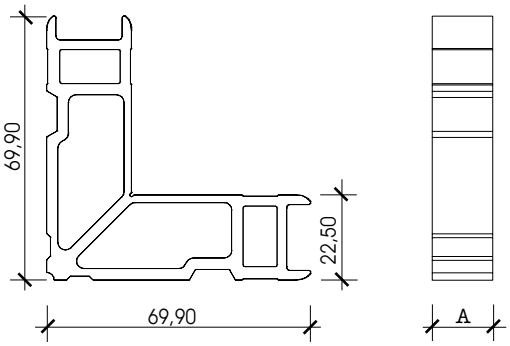	**110.23***** 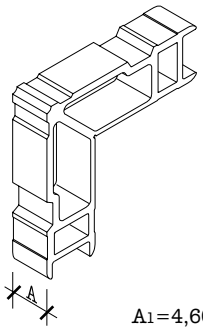 A1=4,60mm A2=12,10mm A3=15,60mm A4=19,60mm A5=25,10mm A6=27,00mm A7=34,50mm
	1)110.23046	For profiles M11152		
	2)110.23121	M11010 ,M11149 , M11205.		
	3)110.23156	M11393		
	4)110.23196	M11010 , M11016 , M11020 , M11149 , M11205 , M11244 .		
	5)110.23251	M11130		
	6)110.23270	M11016 , M11020 , M11034 , M11044 , M11050 , M11148 , M11152 , M11216 , M11217.		
	7)110.23345	M11324		

CORNERS

Extruded aluminium press corners

Description	height chamber / width chamber	Application	Dimensions	Isometric view
Extruded aluminium press corner **Color**: mill finish			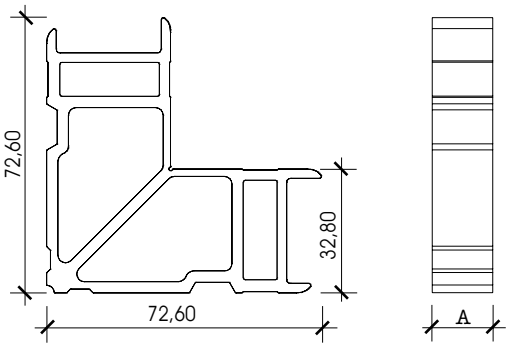	**110.33***** 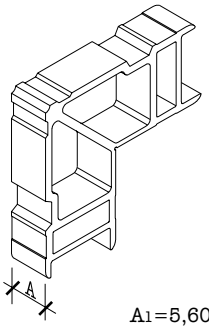 A1=5,60mm A2=12,10mm A3=15,60mm A4=19,60mm A5=27,70mm A6=28,30mm A7=30,00mm A8=35,60mm A9=37,50mm
	1)110.33056	For profiles M11082 , M11088, M11288.		
	2)110.33121	M11014 , M11148.		
	3)110.33156	M11038 , M11048, M11190 , M11328, M11338 , M11348, M11358 , M11390, M11391 , M11392.		
	4)110.33196	M11014 , M11018, M11028 , M11134, M11168.		
	5)110.33270	M11018 , M11028, M11168.		
	6)110.33283	M11358		
	7)110.33300	M11348		
	8)110.33356	M11391		
	9)110.33375	M11338		
Extruded aluminium press corner **Color**: mill finish			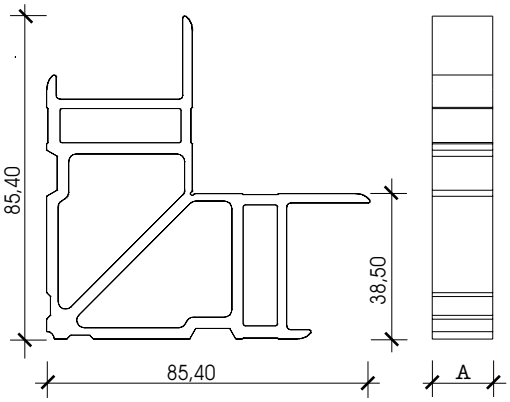	**110.38***** 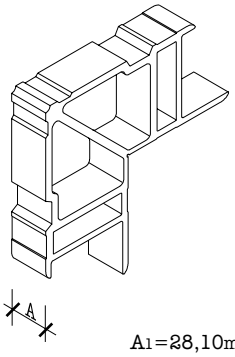 A1=28,10mm
	1)110.38281	For profiles M11392		
Extruded aluminium press corner **Color**: mill finish			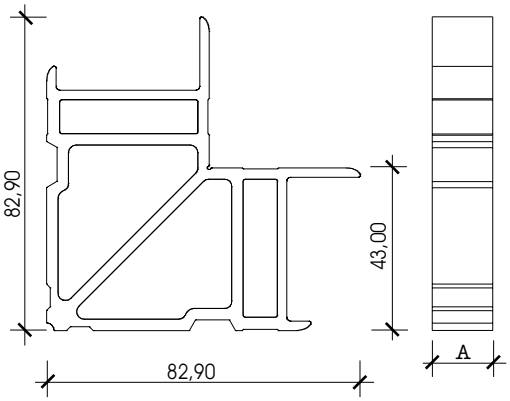	**110.43***** 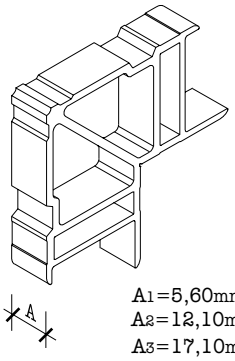 A1=5,60mm A2=12,10mm A3=17,10mm A4=19,60mm A5=20,50mm A6=22,00mm A7=25,10mm A8=27,00mm A9=29,50mm A10=32,60mm A11=34,50mm A12=41,60mm
	1)110.43056	For profiles M11084 , M11086		
	2)110.43121	M11234 , M11314		
	3)110.43171	M11286		
	4)110.43196	M11314 , M11318.		
	5)110.43205	M11138		
	6)110.43220	M11084 , M11086, M11286 , M11138		
	7)110.43251	M11190		
	8)110.43270	M11038 , M11048, M11318 , M11393.		
	9)110.43295	M11082 , M11088, M11134 .		
	10)110.43326	M11390		
	11)110.43345	M11328		
	12)110.43410	M11288		

CORNERS

Extruded aluminium press corners

Description	height chamber / width chamber	Application	Dimensions	Isometric view
Extruded aluminium press corner **Color**: mill finish	**1)110.57213** M11238 **2)110.57220** M11238 **3)110.57290** M11234	 **For profiles**	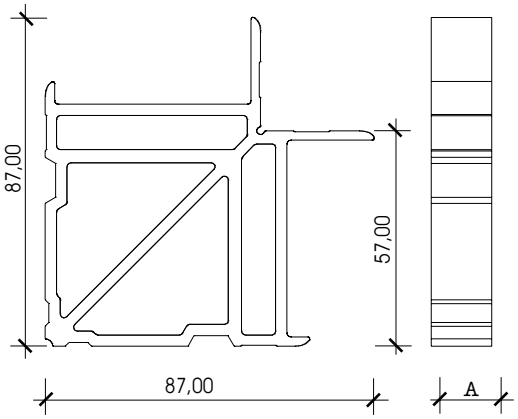	**110.57***** 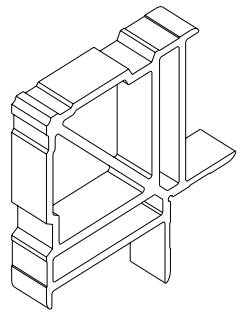 A1=21,30mm A2=22,00mm A3=29,00mm

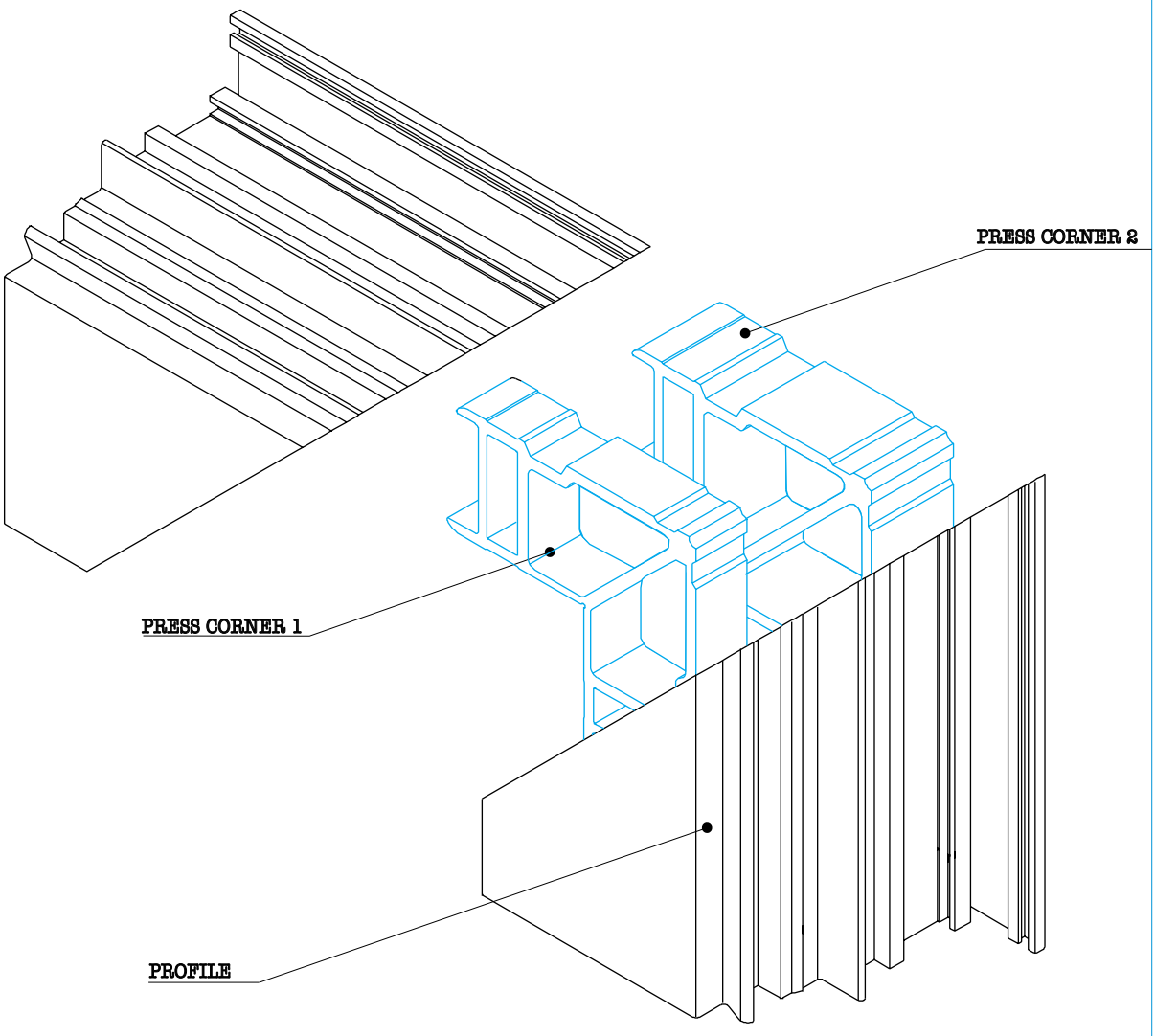

CORNERS

Mechanical aluminium corners

Description	height chamber width chamber	Application	Dimensions	Isometric view
Mechanical joint corner **Color:** mill finish	**1)120.13196** **2)120.13270** **3)120.13345**	 **For profiles** M11008 , M11026 M11026 , M11030, M11040. M11320	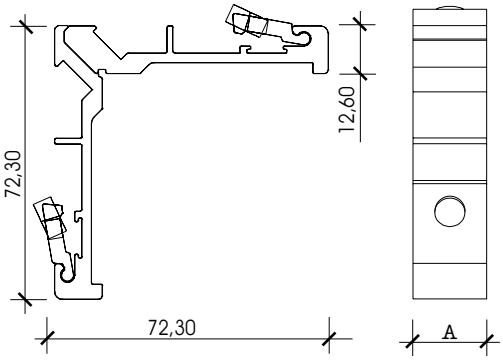	**120.13***** 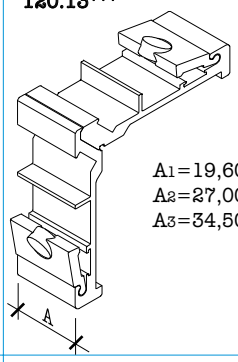 A1=19,60mm A2=27,00mm A3=34,50mm
Mechanical joint corner **Color:** mill finish	**1)120.23196** **2)120.23251** **3)120.23270** **4)120.23345**	 **For profiles** M11010 , M11016, M11020 , M11149, M11205 , M11244. M11130 M11016 , M11020, M11034 , M11044, M11050 , M11148, M11152 , M11216, M11217. M11324	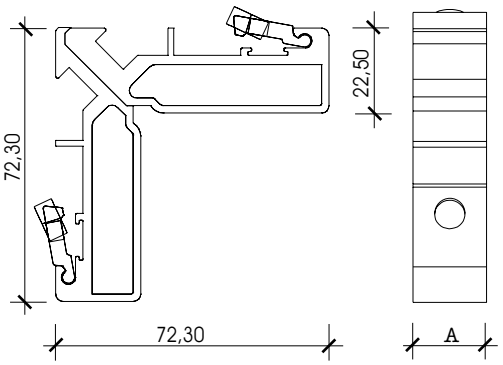	**120.23***** 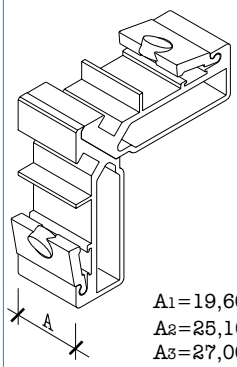 A1=19,60mm A2=25,10mm A3=27,00mm A4=34,50mm
Mechanical joint corner **Color:** mill finish	**1)120.33196** **2)120.33270**	 **For profiles** M11014 , M11018, M11028 , M11168. M11018 , M11028, M11168.	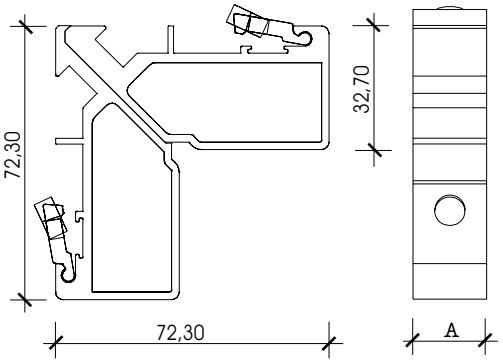	**120.33***** 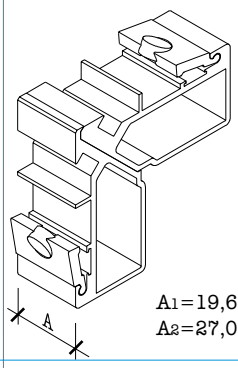 A1=19,60mm A2=27,00mm
Extruded aluminium press corner **Color:** mill finish	**1)120.43171** **2)120.43196** **3)120.43220** **4)120.43251** **5)120.43270** **6)120.43295** **7)120.43326** **8)120.43345** **9)120.43410**	 For profiles M11286 M11314 , M11318. M11084 , M11086, M11286. M11190 M11038 , M11048, M11318 , M11393. M11082 , M11088, M11134. M11390 M11328 M11288	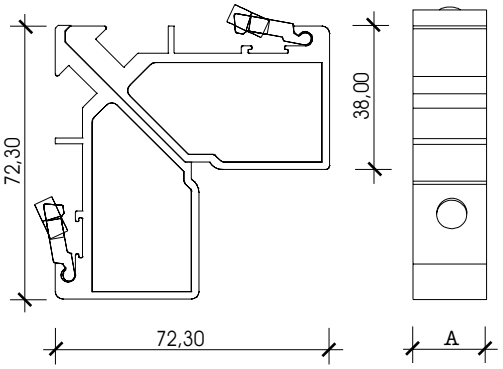	**120.43***** 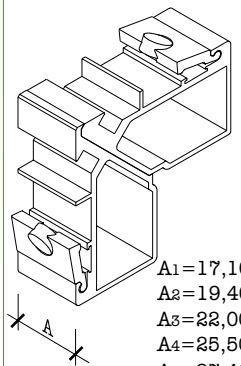 A1=17,10mm A2=19,40mm A3=22,00mm A4=25,50mm A5=27,40mm A6=29,50mm A7=32,60mm A8=34,50mm A9=41,00mm

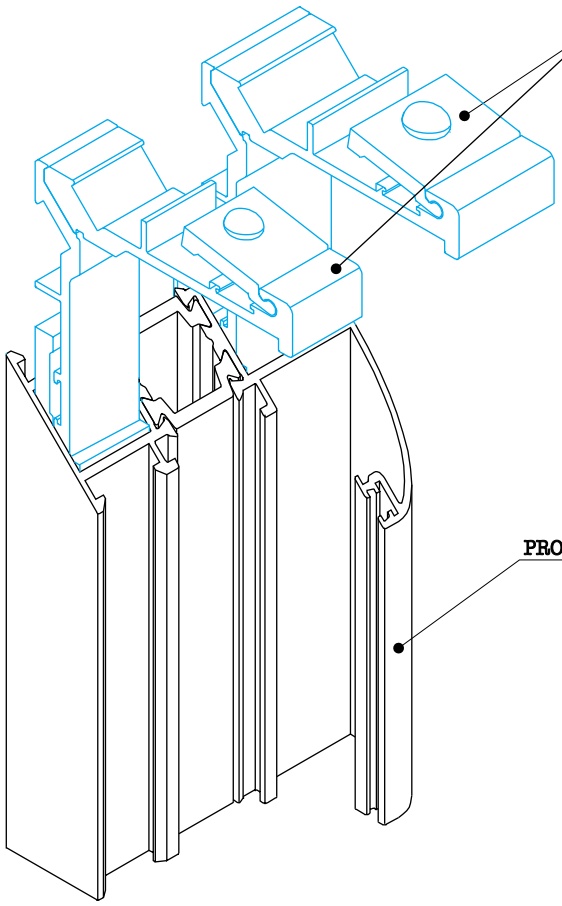
SCREW CORNERS
PROFILE(M11026)

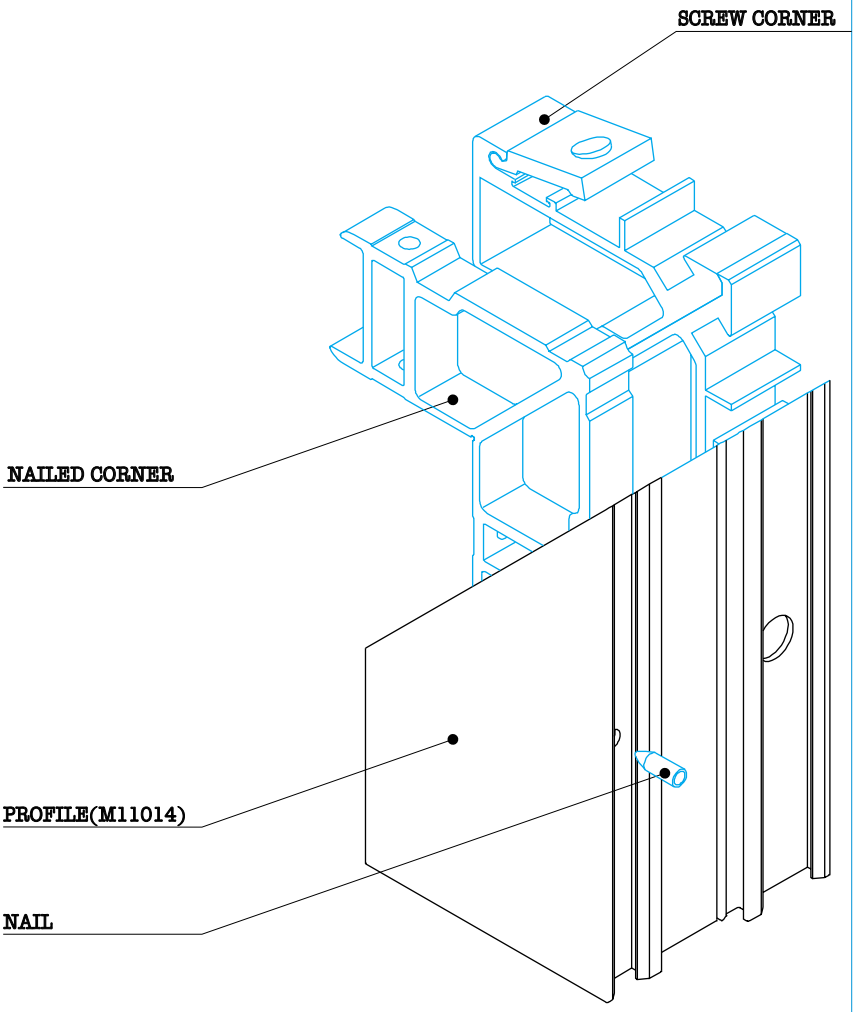
SCREW CORNER
NAILED CORNER
PROFILE(M11014)
NAIL

CORNERS

Extruded aluminium nail corners

Description	height chamber / width chamber	Application	Dimensions	Isometric view
Extruded aluminium nail corner **Color:** mill finish	**1)130.05156**	 **For profiles** M11030 , M11040, M11050 , M11217, M11320 .	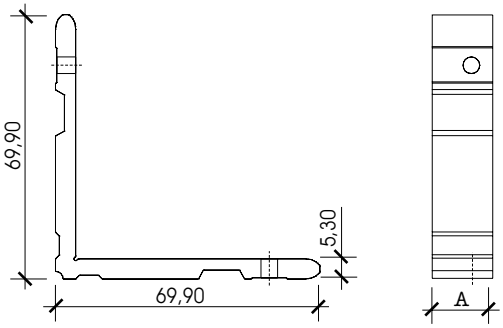	**130.05***** 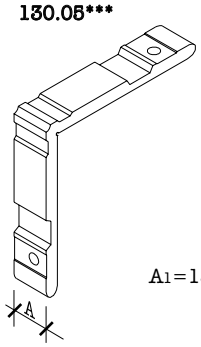 A1=15,60mm
Extruded aluminium nail corner **Color:** mill finish	**1)130.13101** **2)130.13121** **3)130.13156**	 **For profiles** M11080 M11008 , M11080. M11130	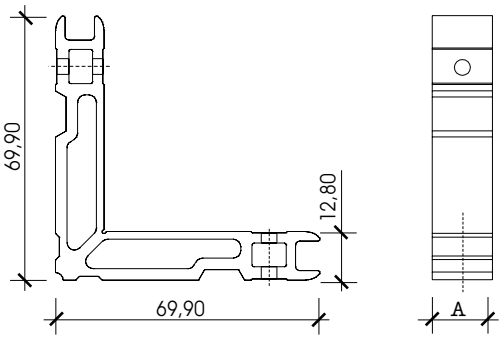	**130.13***** 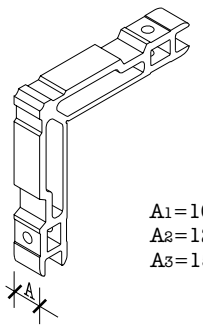 A1=10,00mm A2=12,10mm A3=15,60mm
Extruded aluminium nail corner **Color:** mill finish	**1)130.15102** **2)130.15121** **3)130.15156**	 **For profiles** M11076 M11076 M11034 , M11044, M11216 , M11244, M11324.	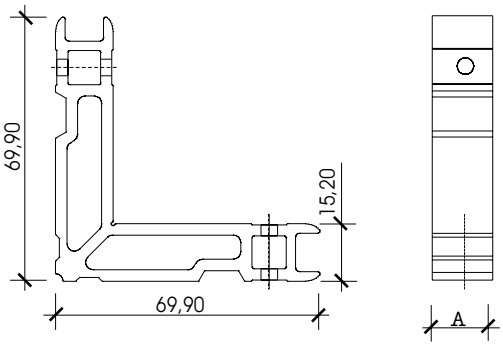	**130.15***** 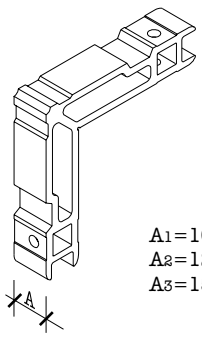 A1=10,20mm A2=12,10mm A3=15,60mm
Extruded aluminium nail corner **Color:** mill finish	**1)130.23046** **2)130.23121** **3)130.23156**	 **For profiles** M11152 M11010 , M11149, M11205 M11393	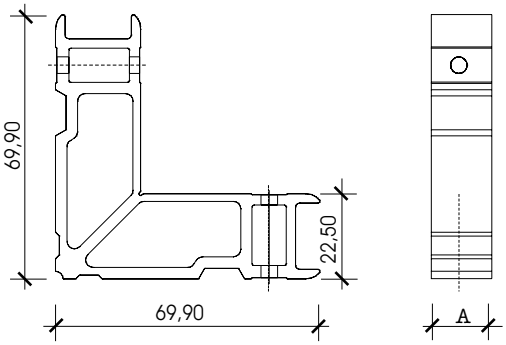	**130.23***** 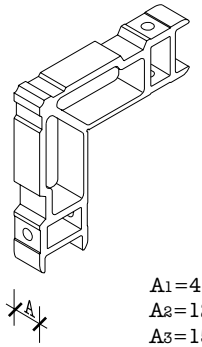 A1=4,60mm A2=12,10mm A3=15,60mm

CORNERS

Extruded aluminium nail corners

Description	height chamber width chamber	Application	Dimensions	Isometric view
Extruded aluminium nail corner **Color:** mill finish	**1)130.33056** **2)130.33121** **3)130.33156**	 **For profiles** M11082 , M11088, M11288. M11014 , M11148. M11038 , M11048, M11190 , M11328, M11390.	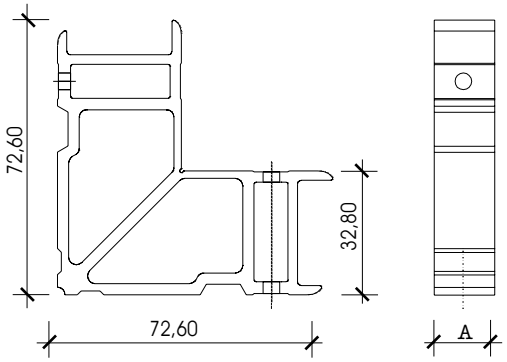	**130.33***** 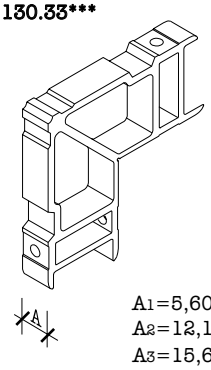 A1=5,60mm A2=12,10mm A3=15,60mm
Extruded aluminium nail corner **Color:** mill finish	**1)130.43056** **2)130.43121**	 **For profiles** M11084 , M11086. M11314	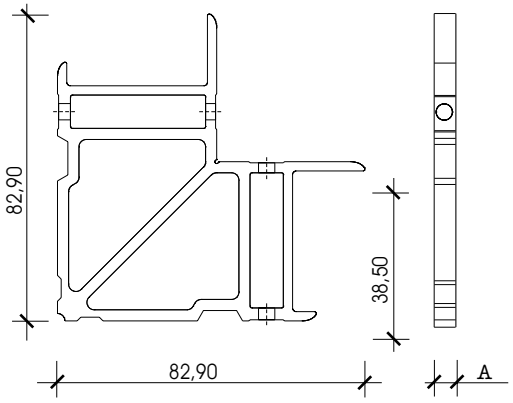	**130.43***** 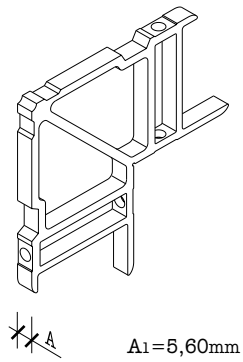 A1=5,60mm A1=12,10mm
Nail **Material:** stainless steel	1)**.**.**-** *		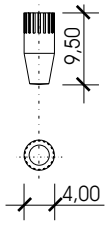	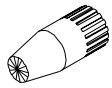

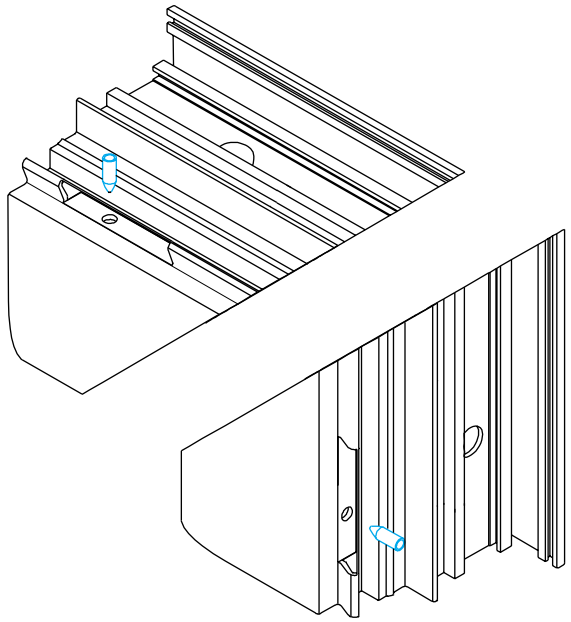

*-Nail diameter 4mm is packaged together with corners and have no code

CORNERS

Plastic alignment squares

Description		Application	Dimensions	Isometric view
Plastic alignment square **Material:** polyamide **Color:** black	**180.11801**	 **For profiles** M11082 , M11084, M11086 , M11088, M11134 , M11138, M11234 , M11238	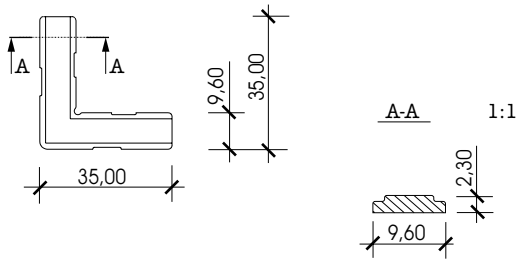	**11.80-01** 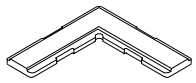
Plastic alignment square **Material:** polyamide **Color:** black	**180.11118**	 **For profiles** M11118	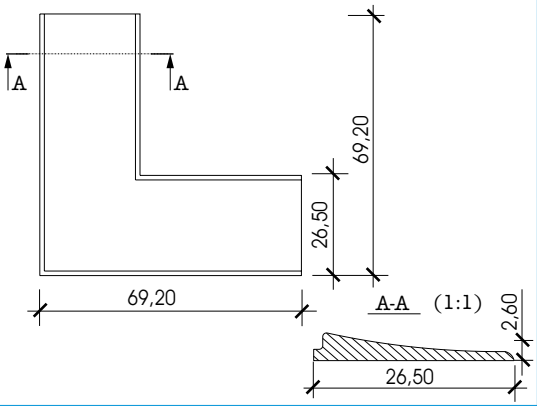	**11.11-8** 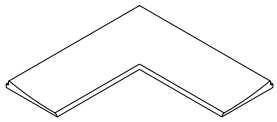
Plastic alignment square **Material:** polyamide **Color:** black	**180.11119**	 **For profiles** M11119	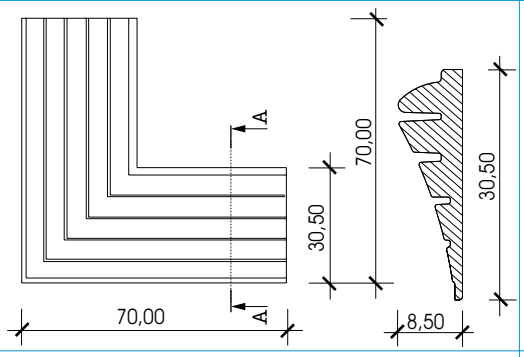	**11.11-9** 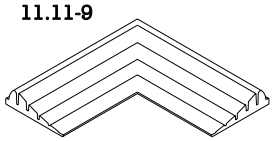
Plastic alignment square **Material:** polyamide **Color:** black	**180.25005**	 **For profiles** M11082 , M11084, M11134 , M11138, M11234 , M11238.	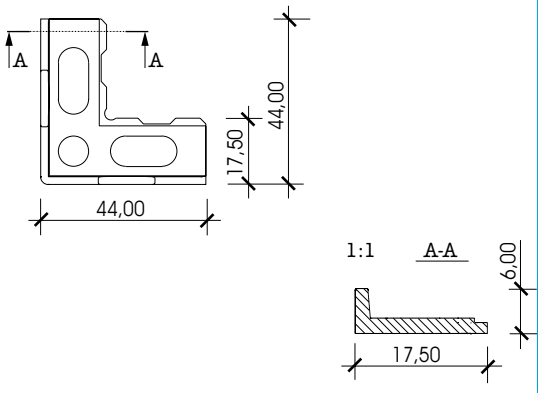	**11.25-05** 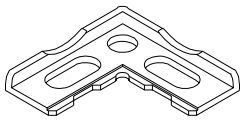
Plastic alignment square **Material:** polyamide **Color:** black	**180.20006**	 **For profiles** M11320 , M11324, M11328 , M11330, M11334 , M11338, M11390 , M11391.	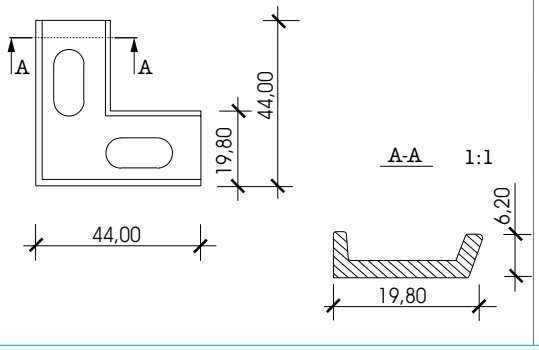	**11.20-06** 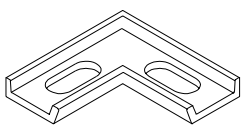

CORNERS

Plastic alignment squares

Description		Application	Dimensions	Isometric view
Plastic alignment square **Material:** polyamide **Color:** black	**180.25008**	 **For profiles** M11050 , M11217, M11370 .	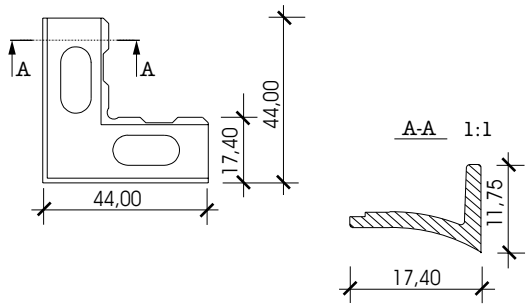	**180.25008** 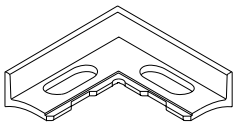
Plastic alignment square **Material:** polyamide **Color:** black	**180.25010**	 **For profiles** M11008 , M11010, M11014 , M11076, M11080 , M11144, M11148 , M11149, M11205 , M11262 , M11314.	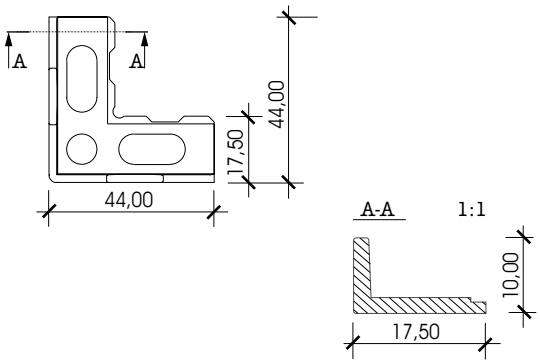	**180.25010** 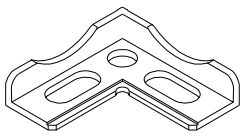
Plastic alignment square **Material:** polyamide **Color:** black	**180.25150**	 **For profiles** M11030 , M11034, M11038 , M11350, M11354 , M11358.	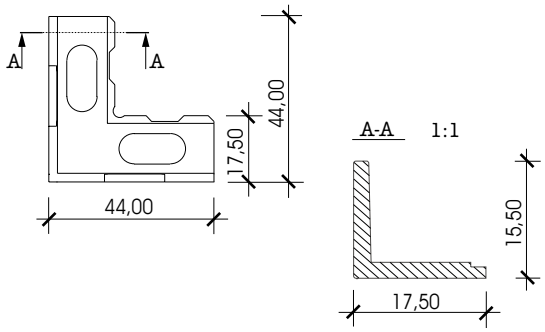	**180.25150** 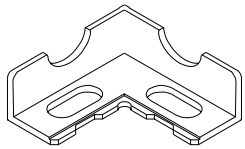
Plastic alignment square **Material:** polyamide **Color:** black	**180.25016**	 **For profiles** M11320 , M11324, M11328 , M11330, M11334 , M11338.	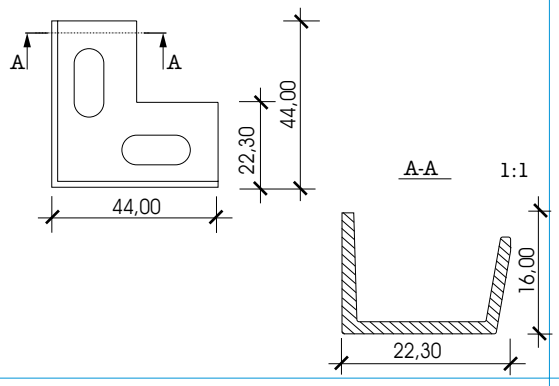	**180.25016** 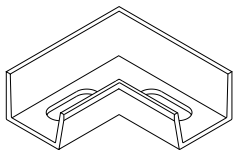
Plastic alignment square **Material:** polyamide **Color:** black	**180.25017**	 **For profiles** M11040 , M11044, M11048 , M11216, M11340 , M11344, M11348.	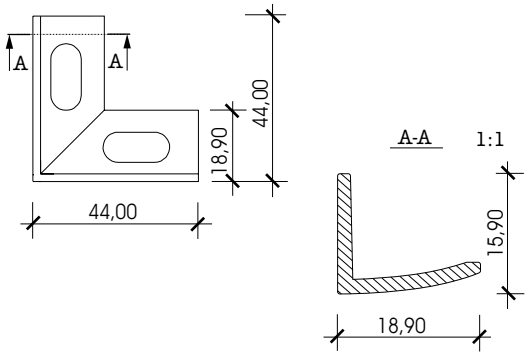	**180.25017** 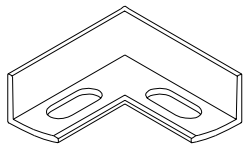

CORNERS

Plastic alignment squares

Description		Application	Dimensions	Isometric view
Plastic alignment square **Material:** polyamide **Color:** black	**180.25018**	 **For profiles** M11393	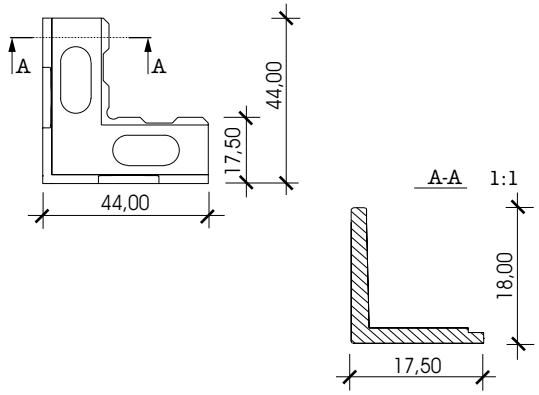	**180.25018** 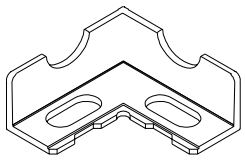
Plastic alignment square **Material:** polyamide **Color:** black	**180.25025**	 **For profiles** M11020 , M11028	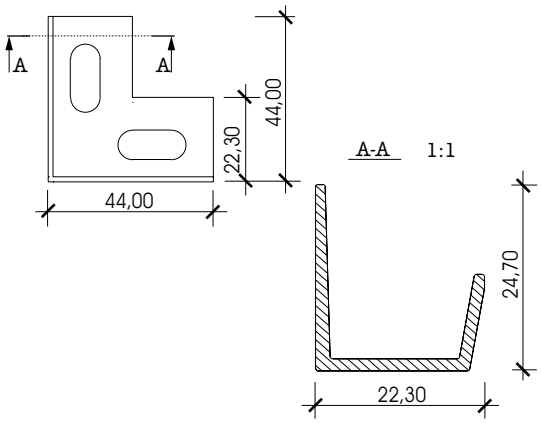	**180.25025** 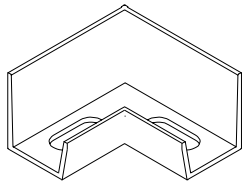
Plastic alignment square **Material:** polyamide **Color:** black	**180.25260**	 **For profiles** M11016 , M11018, M11026 , M11168 M11318.	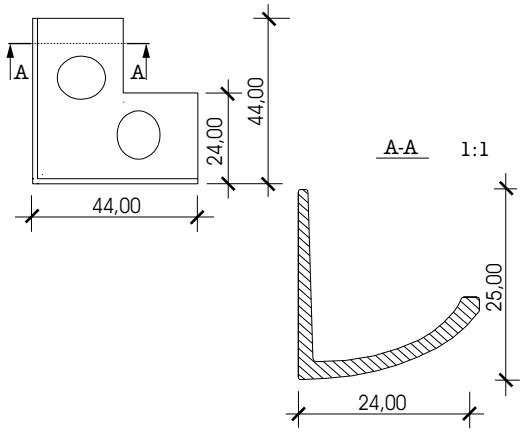	**180.25260** 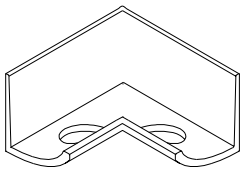
Plastic alignment square **Material:** polyamide **Color:** black	**180.25027**	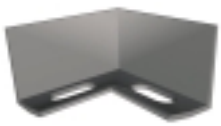 **For profiles** M11130 , M11190, M11392 .	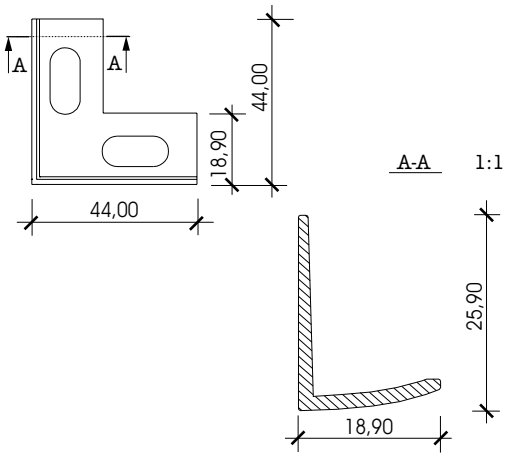	**180.25027** 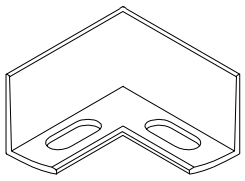

CORNERS

Plastic alignment squares

Description		Application	Dimensions	Isometric view
Plastic alignment square **Material:** polyamide **Color:** black	**180.25033**	 **For profiles** M11390 , M11391	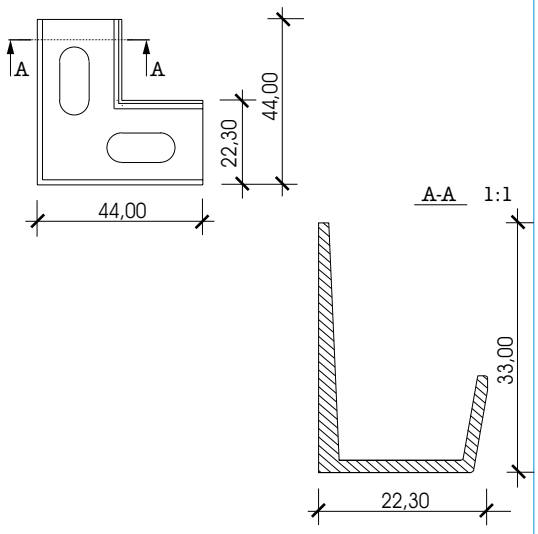	**11.25-33** 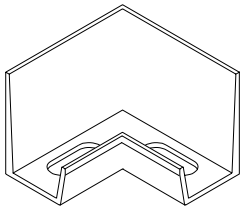
Plastic alignment square Material: polyamide Color: black	**180.20010**	 **For profiles** M11030 , M11034, M11038 , M11040, M11044 , M11048, M11050 , M11130, M11152 , M11190, M11244 , M11320, M11324 , M11328, M11330 , M11334, M11338 , M11340, M11344 , M11348, M11350 , M11354, M11358 , M11370, M11390 , M11391, M11392 , M11393.	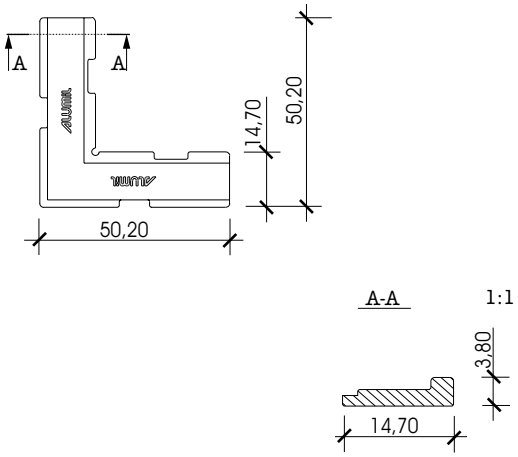	**180.20000** 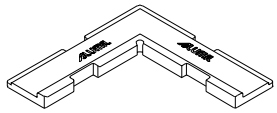
Plastic alignment square **Material:** stainless steel **Color:** mill finish	**180.19000**	 **For profiles** M11016 , M11018, M11020 , M11026, M11028 , M11078, M11118 , M11119, M11134 , M11138, M11149 , M11168, M11188 , M11238, M11286 , M11288, M11318 , M11320, M11324 , M11328, M11330 , M11334, M11338 , M11390, M11391 , M216, M9379.	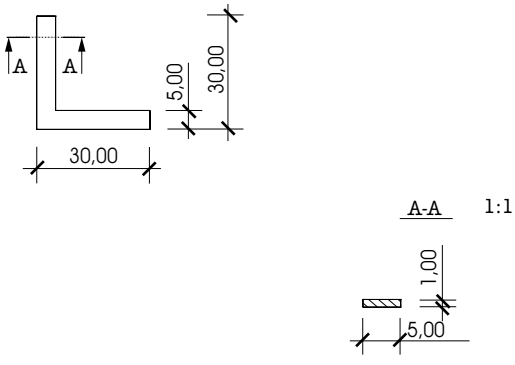	**180.19000** 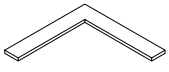

PROFILE

180.25***

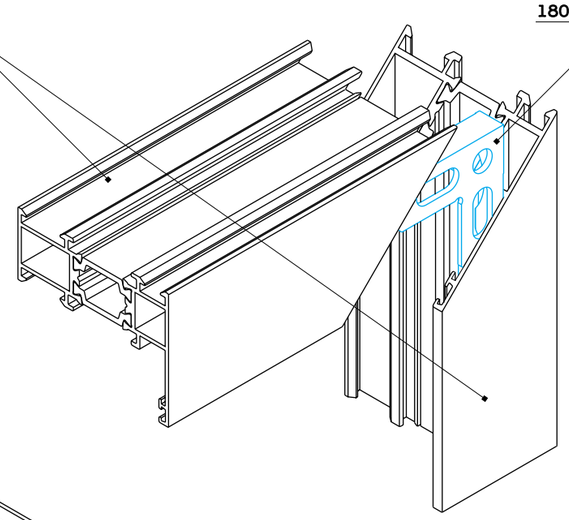

180.20006

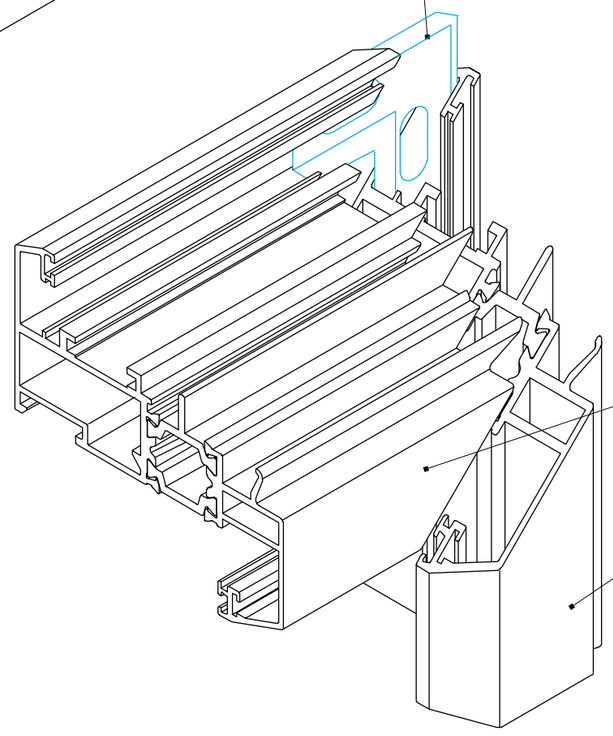

PROFILE

180.20010

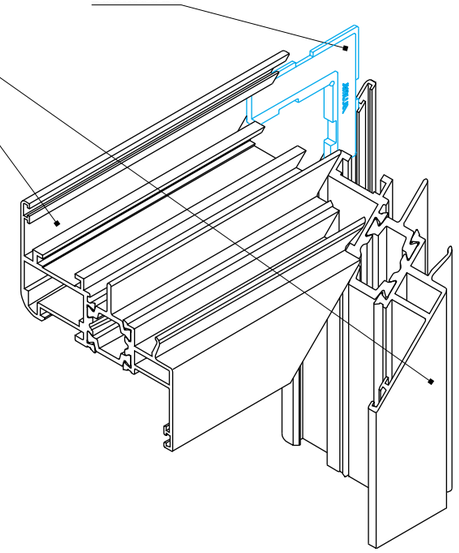

PROFILE

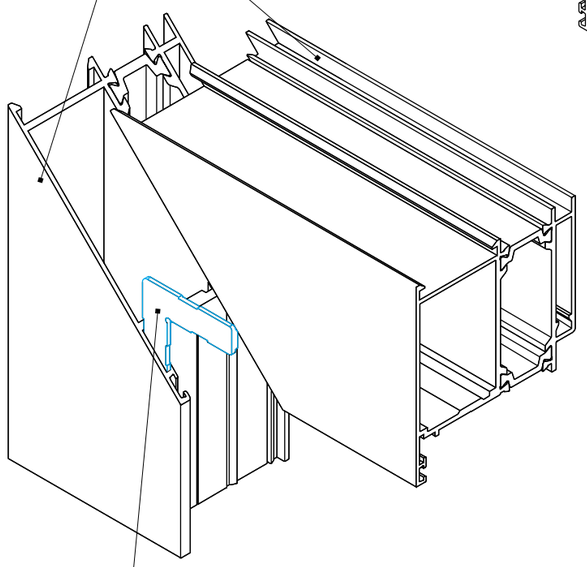

180.11801

180.19000

PROFILE

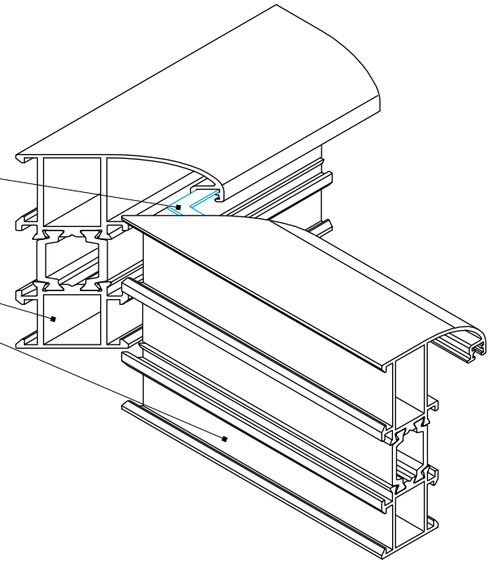

PROFILE

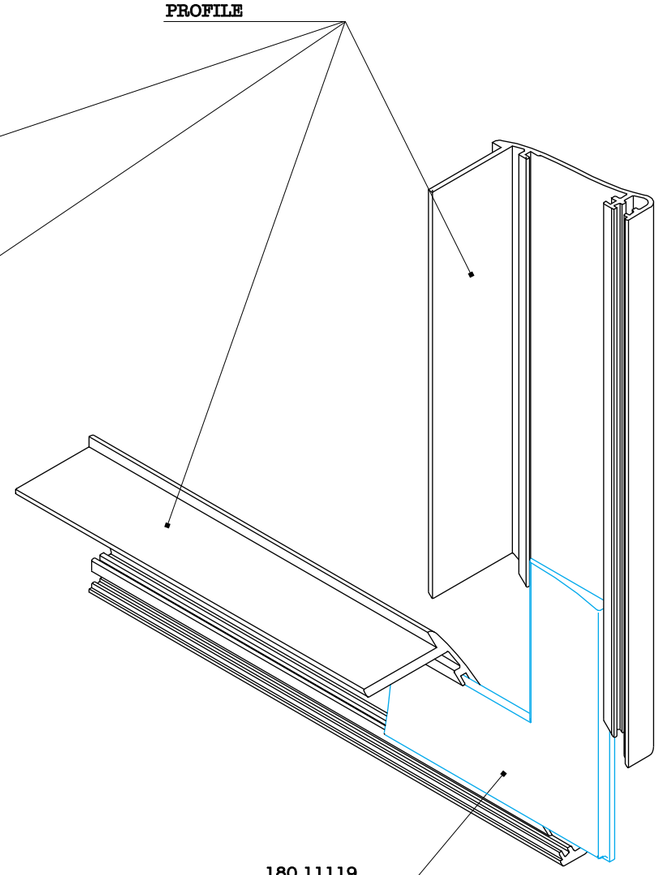

180.11119

"T" PROFILE ACCESSORIES

Milling bits for straight "T" profiles

Description		Application	Dimensions	Isometric view
Milling bits for "T" profiles **Material:** steel **Color:** mill finish	**852.40126**	 **For profiles** M11062 , M11064, M11066 , M11068, M11070 , M11074, M11266.	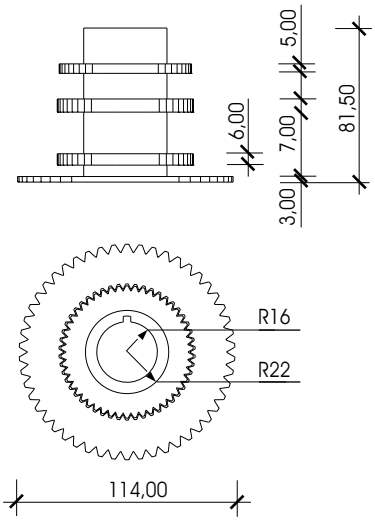	**85240126** 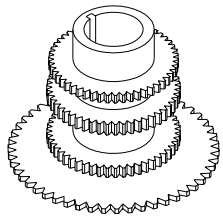
Milling bits for "T" profiles **Material:** steel **Color:** mill finish	**852.12601**	 **For profiles** M11362 , M11366	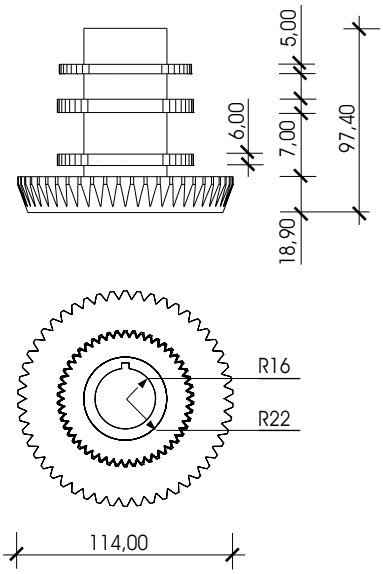	**85212601** 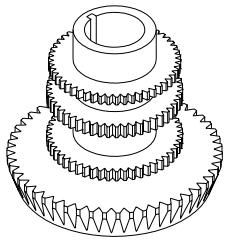
Milling bits for "T" profiles **Material:** steel **Color:** mill finish	**852.12602**	 **For profiles** M11078 , M11188	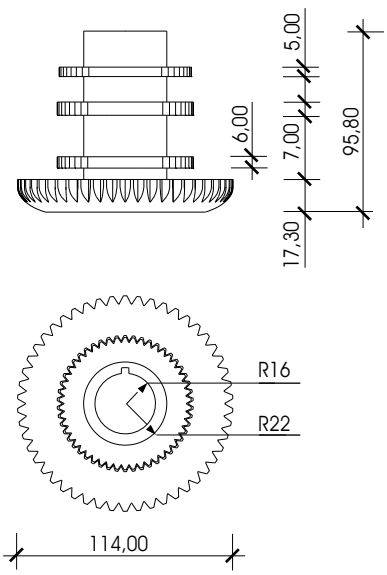	**85212602** 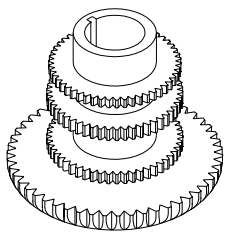

"T" PROFILE ACCESSORIES

Milling bit for "T"-profiles

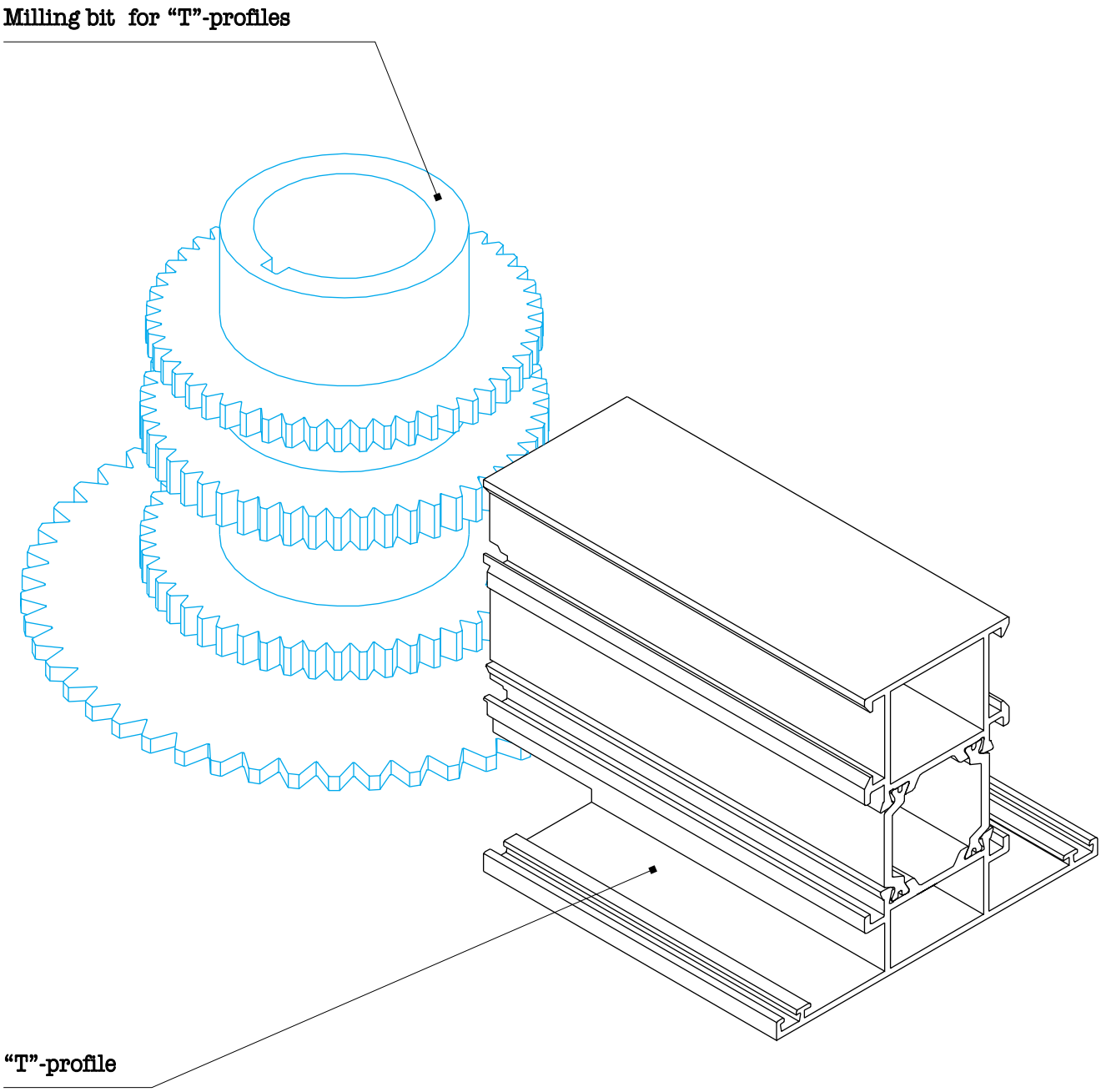

"T" PROFILE ACCESSORIES

"T"-connectors

Description		Application	Dimensions	Isometric view
Milling bits for "T" profiles **Material:** extruded aluminium **Color:** mill finish	**160.11813**	**For profiles** M11062 , M11076, M11080 , M11242, M11262 , M11342, M11362 , M11442.	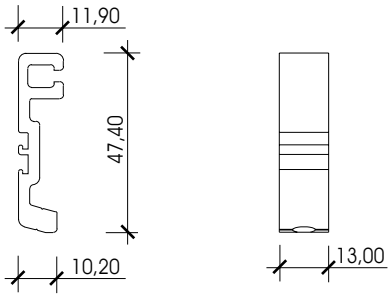	**160.11813** 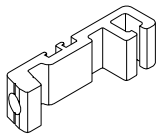
Milling bits for "T" profiles **Material:** extruded aluminium **Color:** mill finish	**160.11823**	**For profiles** M11064 , M11068	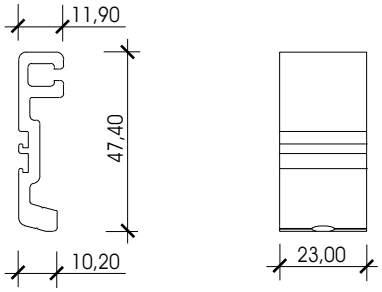	**160.11823** 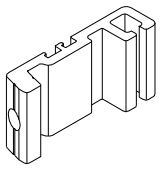
Milling bits for "T" profiles **Material:** extruded aluminium **Color:** mill finish	**160.11833**	**For profiles** M11066 , M11070, M11074 , M11078, M11188 , M11366.	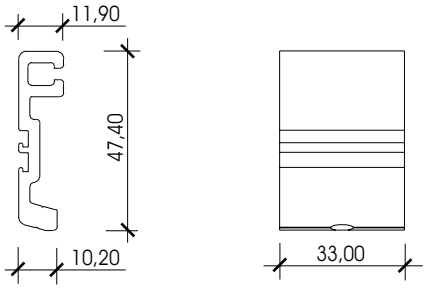	**160.11833** 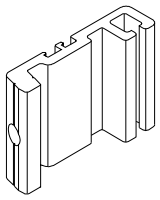
Milling bits for "T" profiles **Material:** extruded aluminium **Color:** mill finish	**160.11213**	**For profiles** M11062 , M11142, M11262 , M11342, M11362 , M11442.	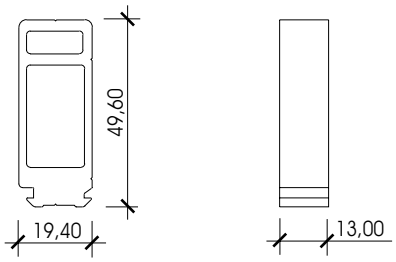	**160.11213** 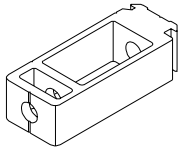
Milling bits for "T" profiles **Material:** extruded aluminium **Color:** mill finish	**160.11223**	**For profiles** M11064 , M11068	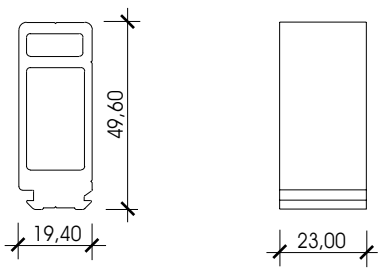	**160.11223** 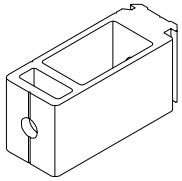

"T" PROFILE ACCESSORIES

"T"-connectors

Description		Application	Dimensions	Isometric view
Milling bits for "T" profiles **Material:** extruded aluminium **Color:** mill finish	**160.11233**	 **For profiles** M11066 , M11070, M11074 , M11078, M11188 , M11366.	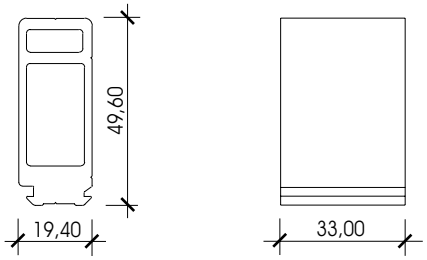	**160.11233** 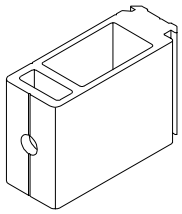
Nail **Material:** stainless steel	**470.11834**	 **For all "T"-connectors**	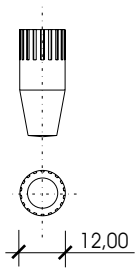	**470.11834**

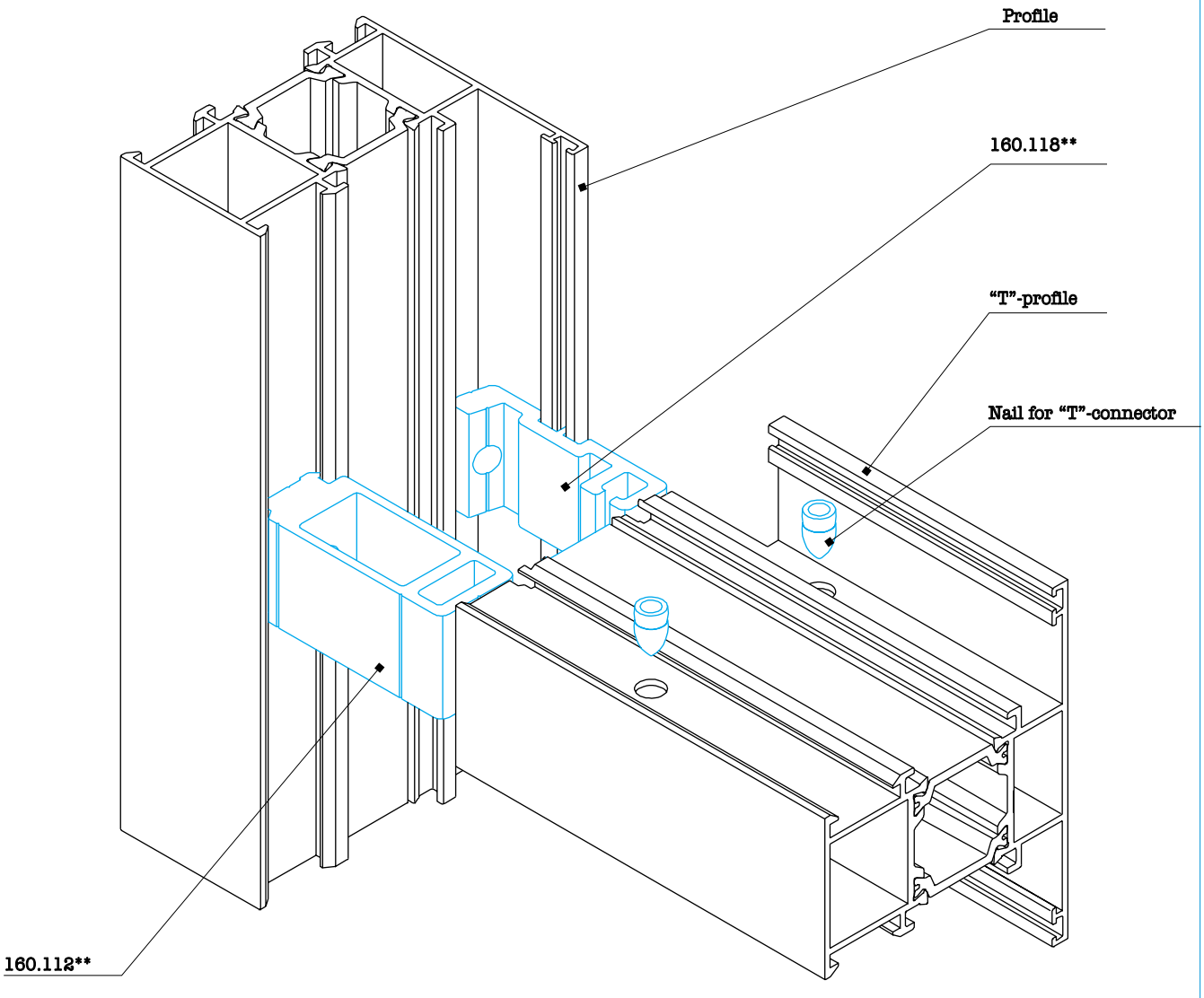

Handle casements and hinges

Description		Application	Dimensions	Isometric view
Handle casement single action "Maxima" **Material:** aluminium **Color:** white	**380.50113**	 **For profiles** All sashes	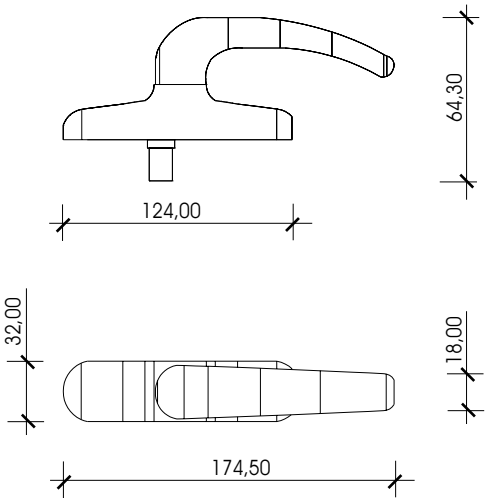	**380.50113** 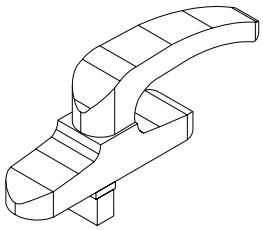
Handle casement double action "Maxima" **Material:** aluminium **Color:** white	**380.50111**	 **For profiles** All sashes	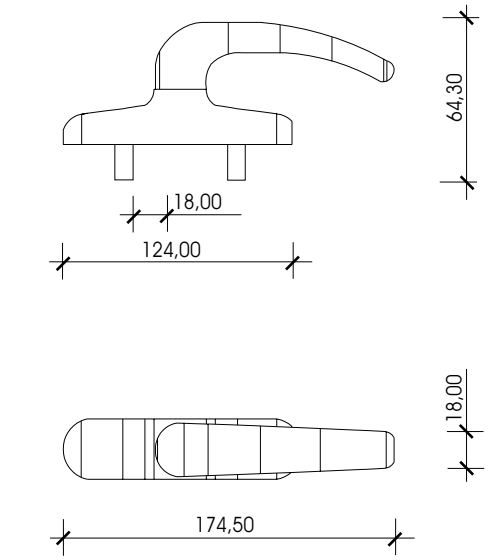	**380.50111** 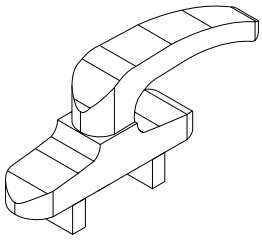
Cremone bolts "Corine Oro" in extruded brass for tilt & turn **Material:** aluminium **Color: gold**	**380.53000**	 **For profiles** All sashes	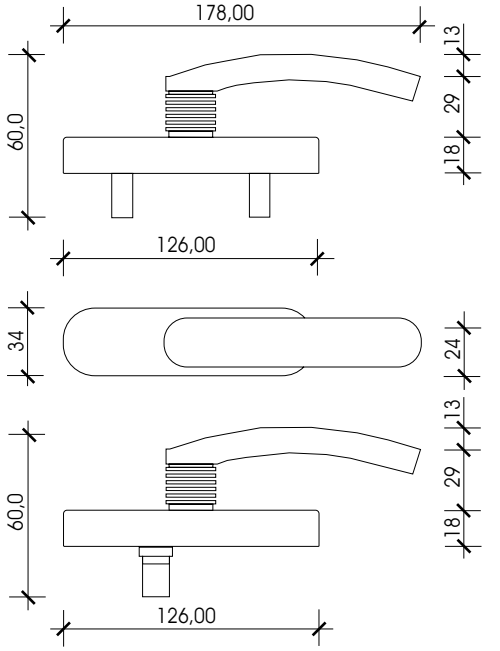	**380.53000** 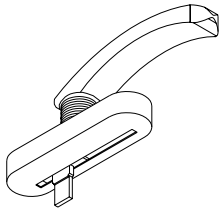

Handle casements and hinges

Description		Application	Dimensions	Isometric view
Door double handle "Sumo" **Material:** aluminium **Color:** white	**380.54000**	 **For profiles** All sashes	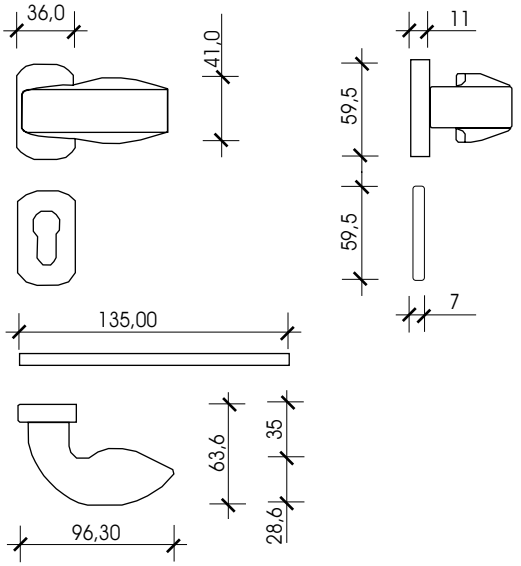	**380.54000**
Pair of lever handles "Globo" **Material:** aluminium **Color:** white	**455.50221**	 **For profiles** All sashes	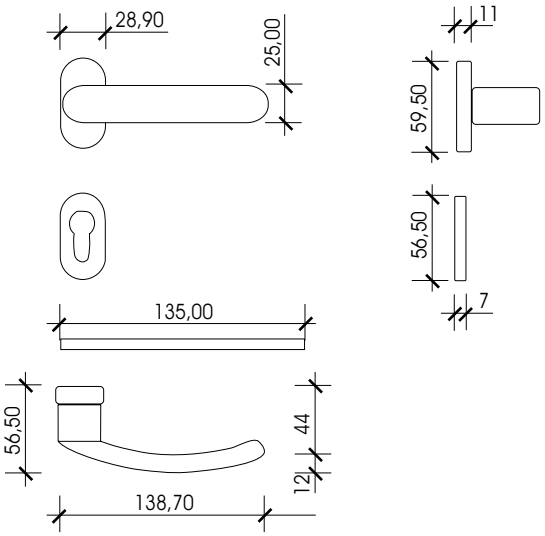	**455.50221**
Pair of lever handles "CORINTO ORO" in extruded brass **Material:** aluminium **Color:** white,black	**455.55020**	 **For profiles** All frames and sashes	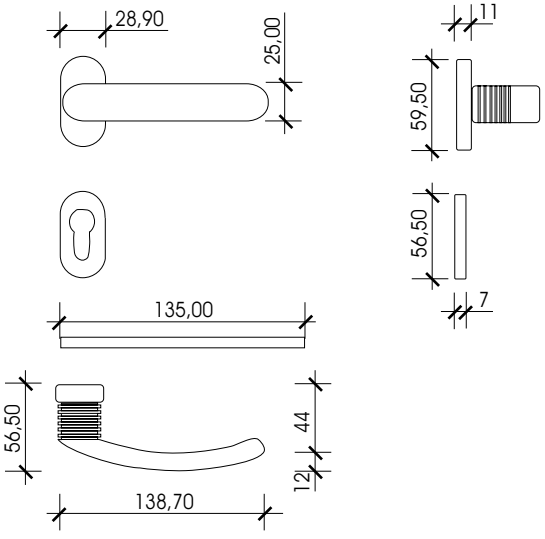	**455.55020**

Handle casements and hinges

Description		Application	Dimensions	Isometric view
Handle casement "Maxima" **Material:** aluminium **Color:** white,black	**455.03627**	 **For profiles** All sashes	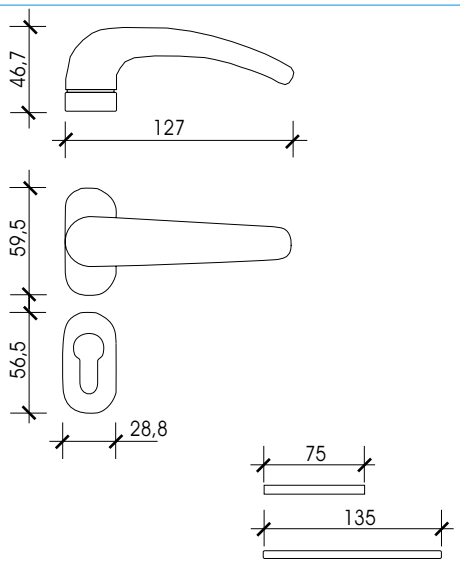	**455.03627**
Handle casement double action "Maxima" **Material:** aluminium **Color:** white,black	**455.52204**	 **For profiles** All sashes	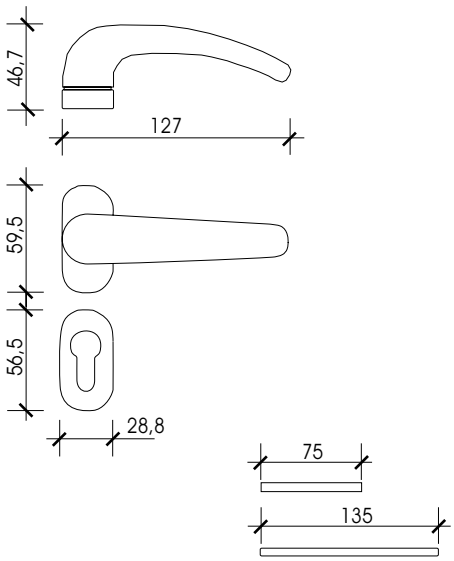	**455.52204**
Double hing simple **Material:** aluminium **Color:** white,black	**350.50000**	 **For profiles** All frames and sashes	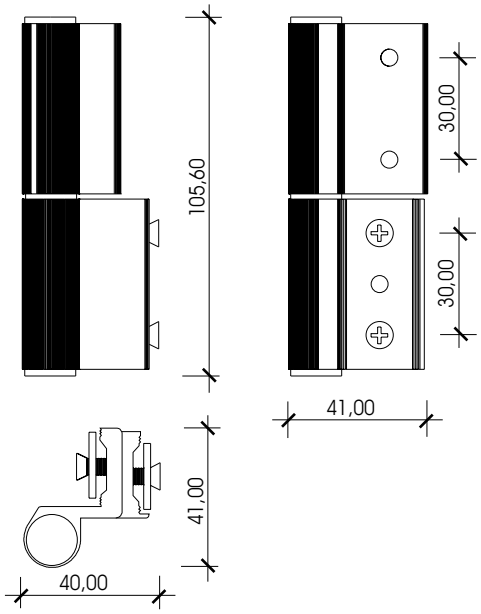	**350.50000** 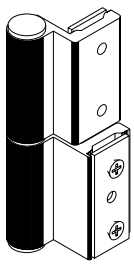

Kit pairs

Description		Application	Dimensions	Isometric view
Double hing standard **Material:** aluminium **Color:** white,black,brown	 **white** **350.5400002** **black** **350.5400003**	**For profiles** All frames and sashes	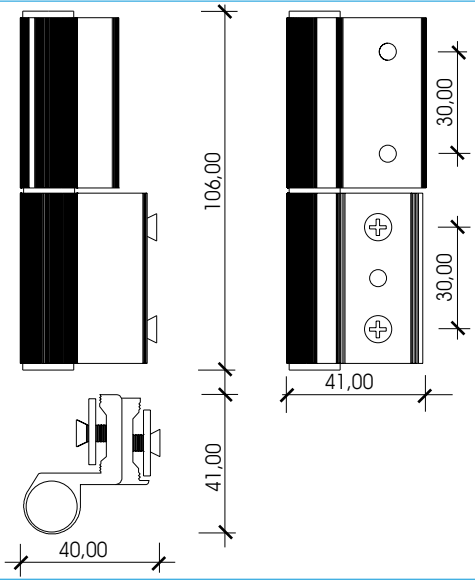	**350.5400002** **350.5400003** 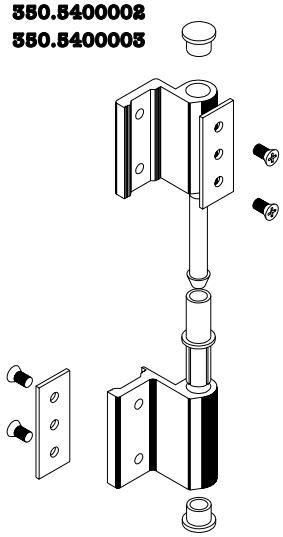
Double hing standard **Material:** aluminium **Color:** white,black,brown	 **white** **350.5400202** **black** **350.5400203**	**For profiles** All frames and sashes	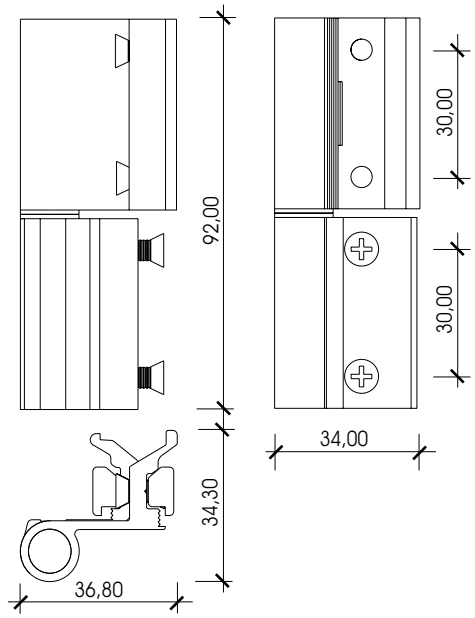	**350.5400202** **350.5400203** 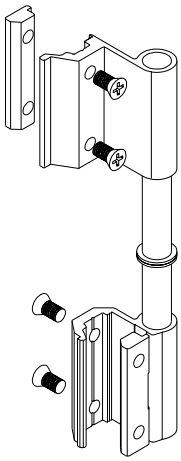
Kit pair of hinges tilt-n-turn 70 kg(Arreti) **Material:** aluminium **Color:** white,black	 **white** **350.5040102** **black** **350.5040103**	**For profiles** All frames and sashes	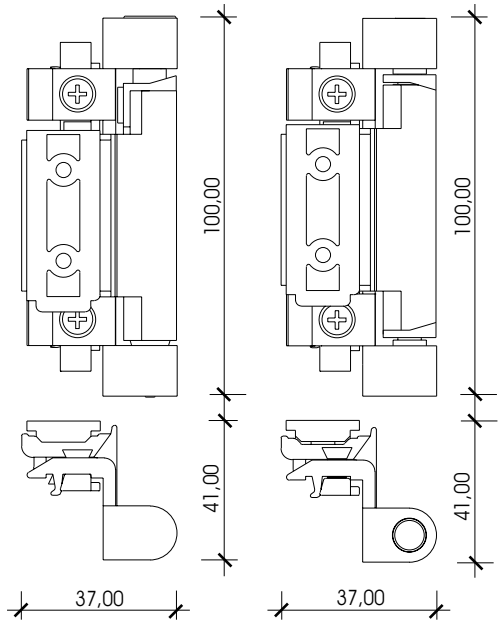	**350.5040102** **350.5040103** 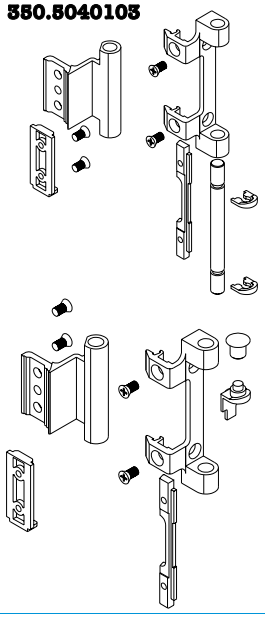

Kit pairs

Description		Application	Dimensions	Isometric view
Kit pair of hinges tilt-n-turn 70-150 kg(Ferrett) **Material:** aluminium **Color:** white,black	**white** **350.5050102** **black** **350.5050103**	 **For profiles** All frames and sashes	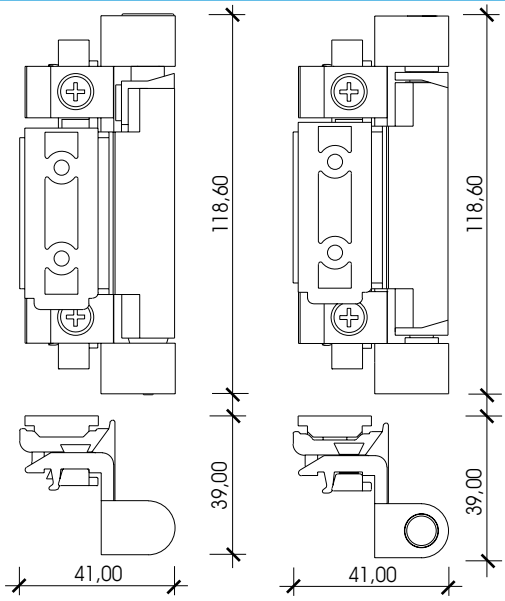	**350.5050102** **350.5050103** 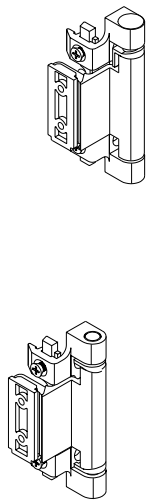
Kit pair of hinges for second leaf-side hung 70 kg(Ferrett) **Material:** aluminium **Color:** white,black	**white** **3505060102** **black** **3505060103**	 **For profiles** All frames and sashes	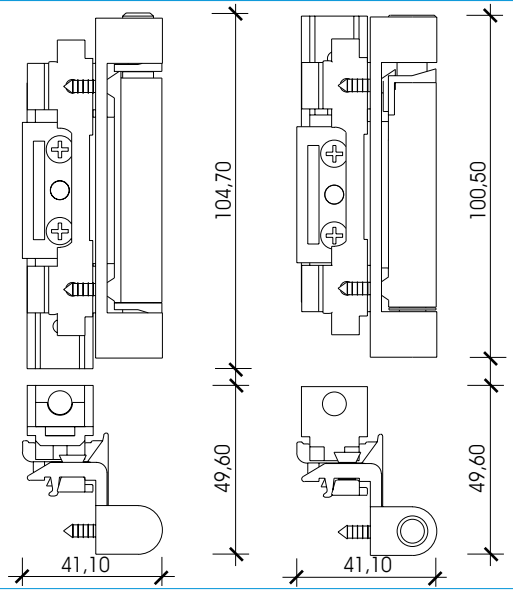	**3505060102** **3505060103** 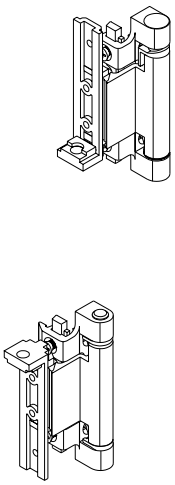
Kit pair of hinges for second leaf-side hung 70 kg(Ferrett) **Material:** aluminium **Color:** white,black	**white** **350.5060402** **black** **350.5060403**	 **For profiles** All frames and sashes	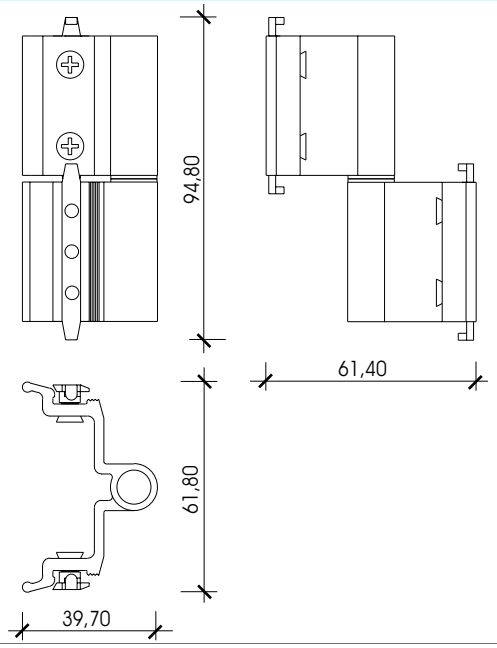	**350.5060402** **350.5060403** 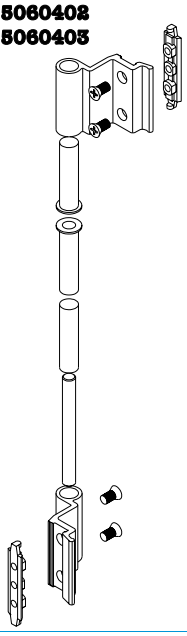

Kit pairs

Description		Application	Dimensions	Isometric view
Kit pair of hinges tilt-n-turn 70-150 kg(Lavaal) **Material:** aluminium **Color:** white,black	 **white** **350.5060002** **black** **350.5060003**	**For profiles** All frames and sashes	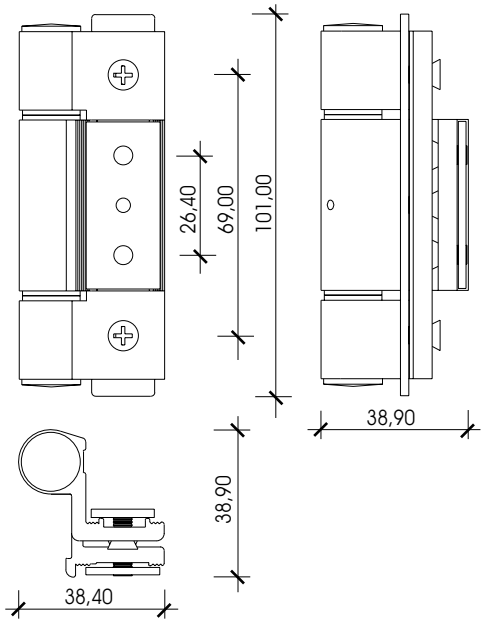	**350.5060002** **350.5060003** 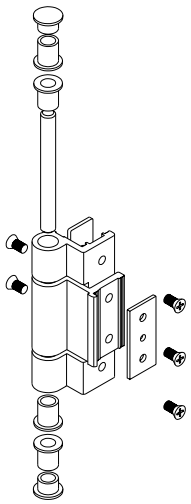
Kit pair of hinges tilt-n-turn 70 kg(Lavaal) **Material:** aluminium **Color:** white,black	 **white** **360.6700002** **black** **360.6700003**	**For profiles** All frames and sashes	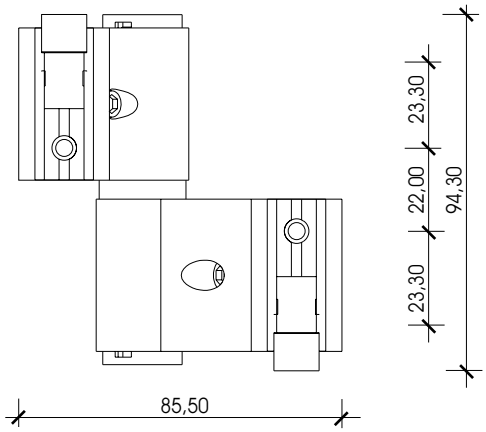 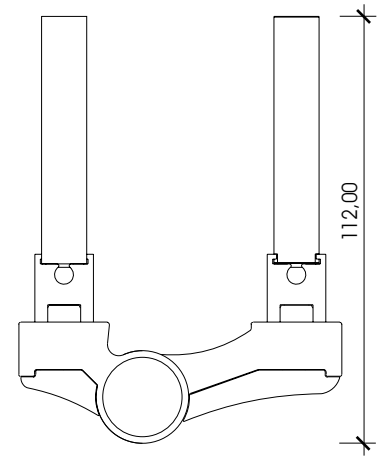 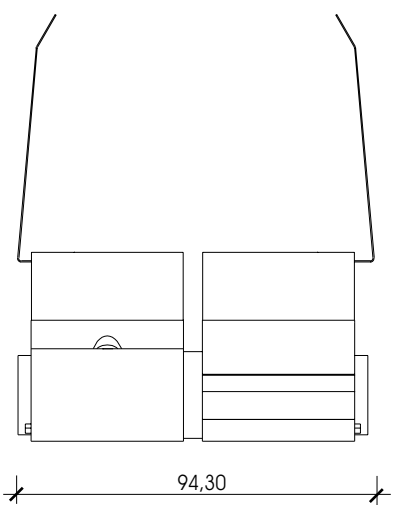	**360.6700002** **360.6700003** 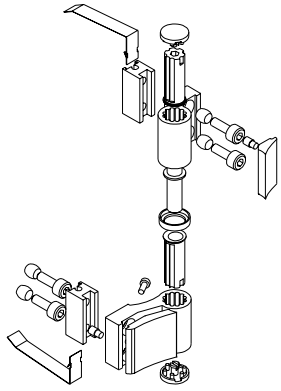

Kit pairs

Description		Application	Dimensions	Isometric view
Kit pair of hinges tilt-n-turn 70-150 kg(Dr.Hahn) **Material:** aluminium **Color:** white,silver	**360.26201**	 **For profiles** All frames and sashes	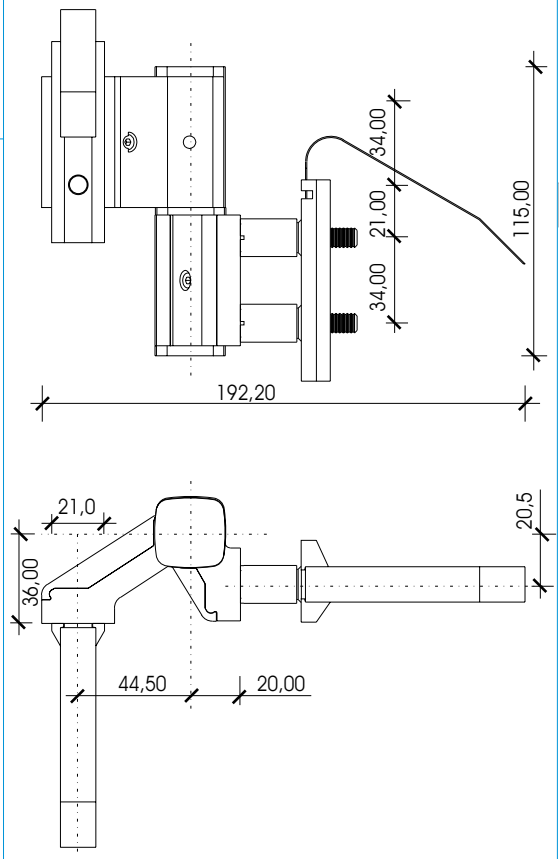	**360.26201** 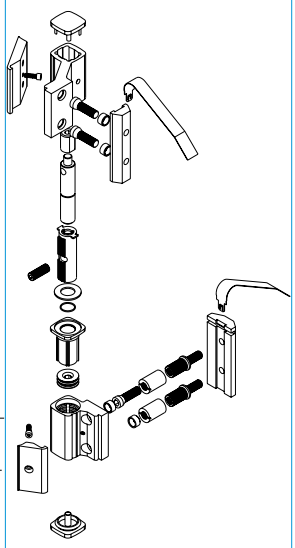
Kit pair of hinges tilt-n-turn 70-150 kg(Dr.Hahn) **Material:** aluminium **Color:** white,silver	**360.26401**	 **For profiles** All frames and sashes	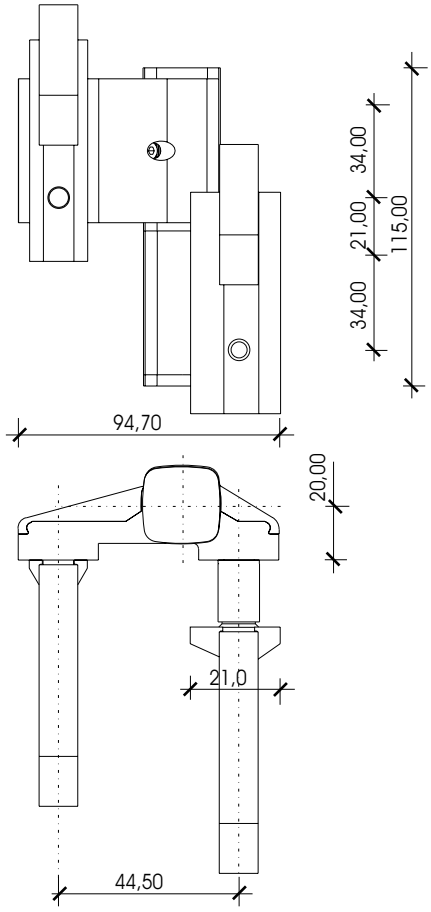	**360.26401** 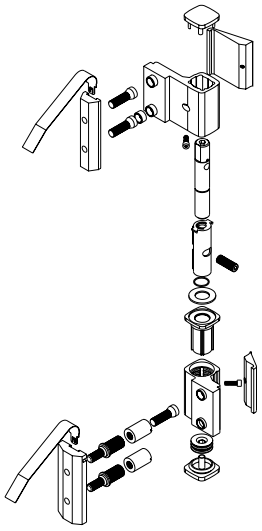

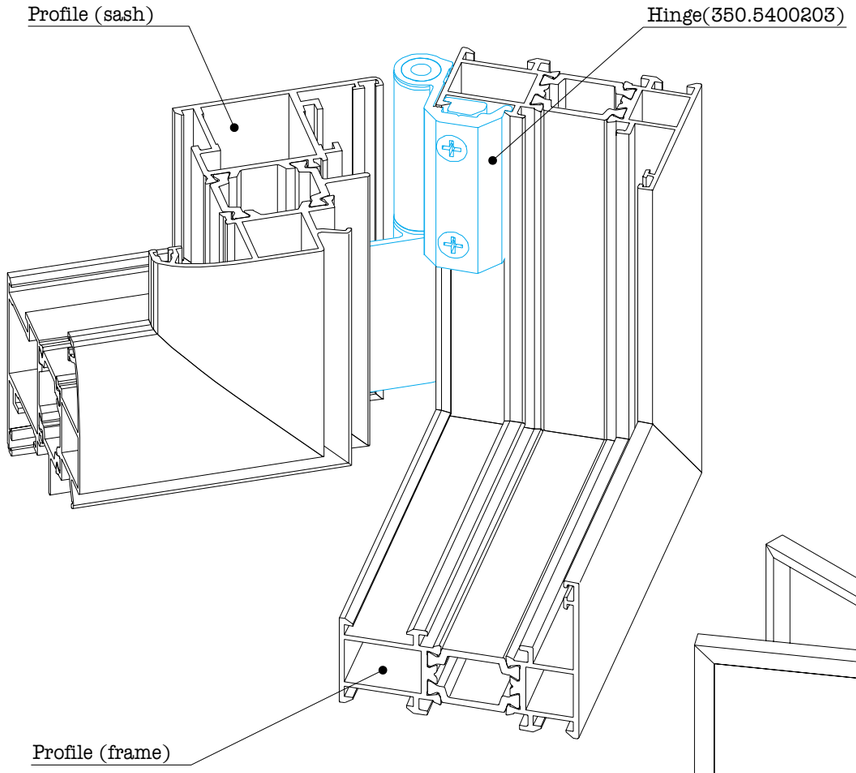

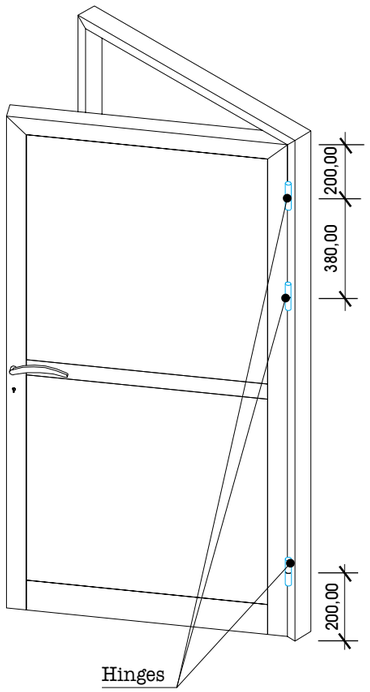

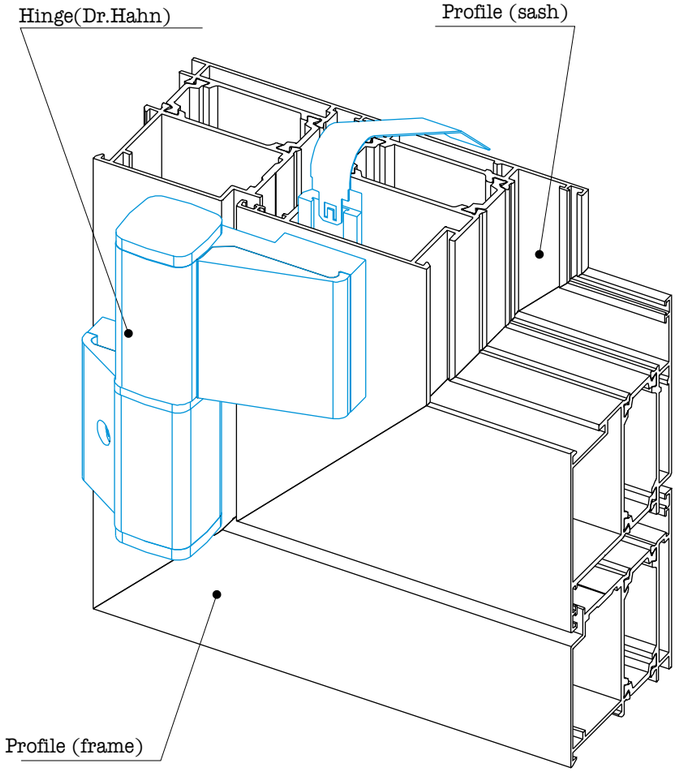

General hinge assembly suggestions

One family , multi-family houses etc.

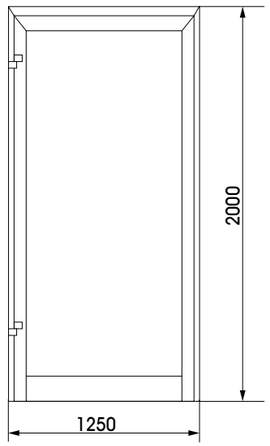

Max. wing weight-120 kg

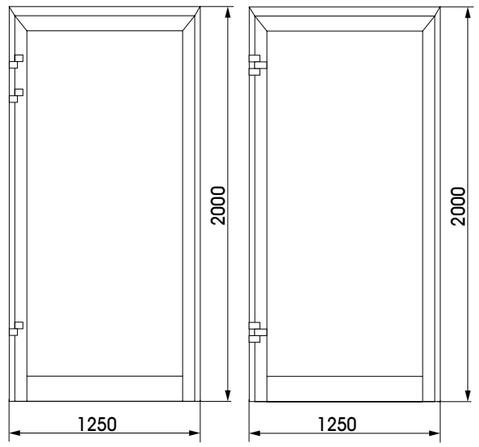

Max. wing weight-120 kg

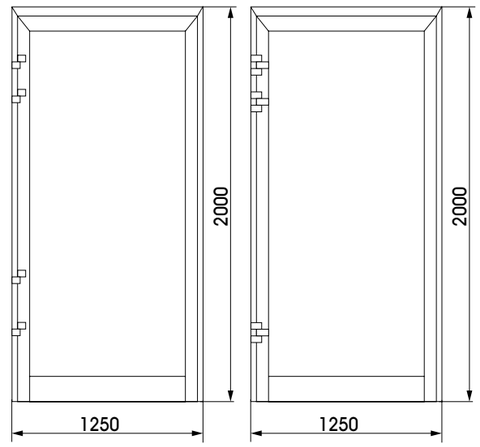

Max. wing weight-140 kg

Hospitals,schools etc.

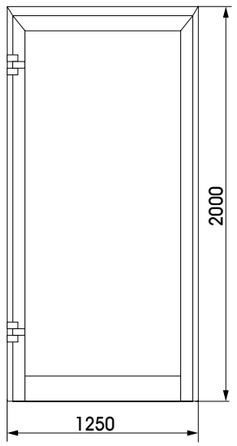

Max. wing weight-120 kg

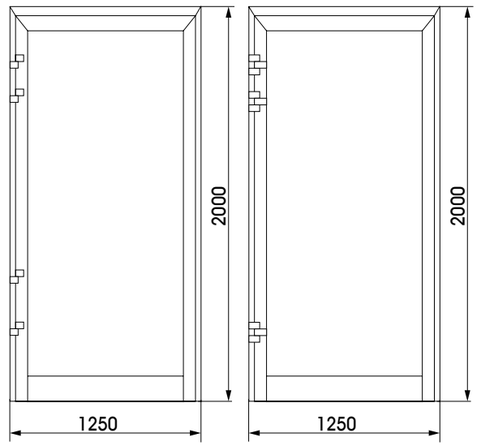

Max. wing weight-120 kg

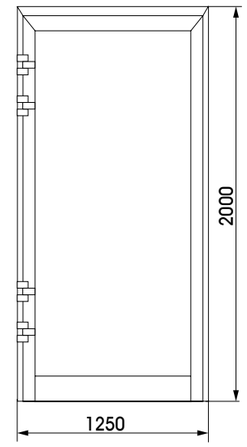

Max. wing weight-140 kg

These general hinge suggestions have allowed for normal width frame sections.The calculations are for original Hahn hinges.

ADJUSTMENT OF
Dr.Hanh HINGES

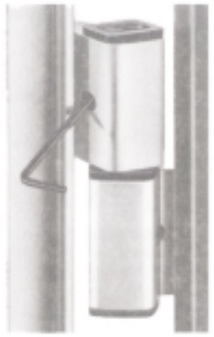

With open position of the sash, unscrew the top and bottom covers of the hinge.

Instalation of the hinge

Place the clambing plates to the section across the holes of D11.

Horizontal adjustment

With +2mm without having any influence to the pressure of the gasket. We adjust the door with the sash closed with the inner screw.

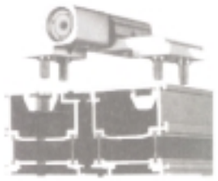

Screw the hinge tight. Recomended moment of torsion : 20-30 Nm.

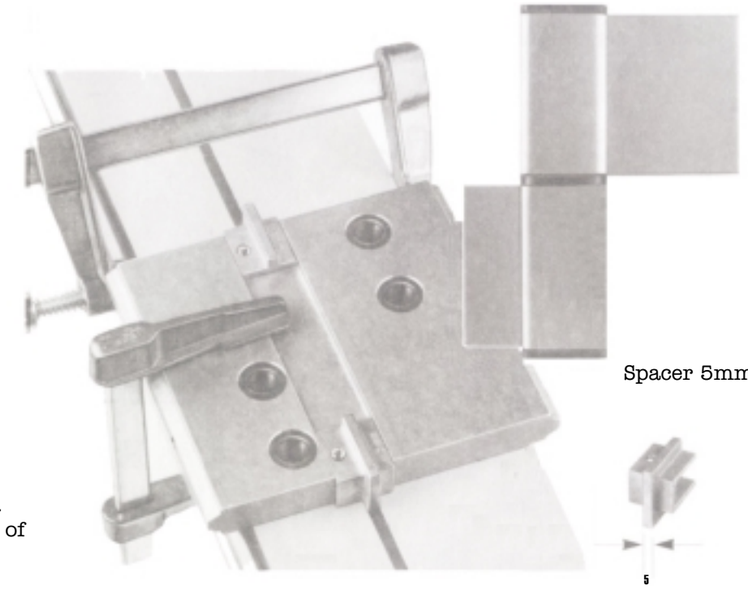

Spacer 5mm

Instalation of the frame and the spacers

Instalation of adjusted spacers

Drill the D11 to D15 mm. Attention : Do not drill to the main chamber (which is the chamber where it will be install the clambing plates) .

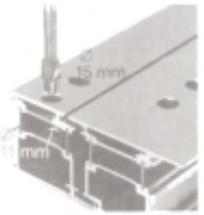

Insert the clambing plate to the main chamber and screw with the special screw. The mainconstruction now is supported to the main chamber.

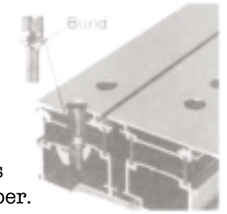

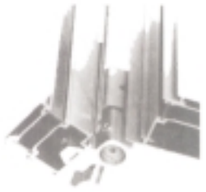

Screw the end covers of the hinge .

Different frames Dr.Hahn

Screw the ring on to the special screw until it comes align with the section .

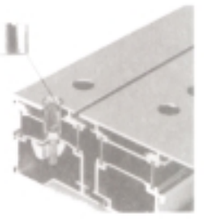

Vertical adjustment

Maximum adjustment 5mm with the sash closed.

ADJUSTMENT OF THE PRESSURE OF THE GASKET

Neuter position

The arrow must point to the direction of the sash.

Increase

The arrow must point forwards the gasket .

Decrease

The arrow must point to the opposite direction of the gasket.

Screw the hinge to inner thread of the screw . Recommandable torsional moment : 20-30Nm.

Tilt and turn mechanism

Description		Application	Dimensions	Isometric view
Kit basic fitting mechanism **Material:** aluminium **Color:** mill finish	**390.500200**	 **For profiles** All frames and sashes	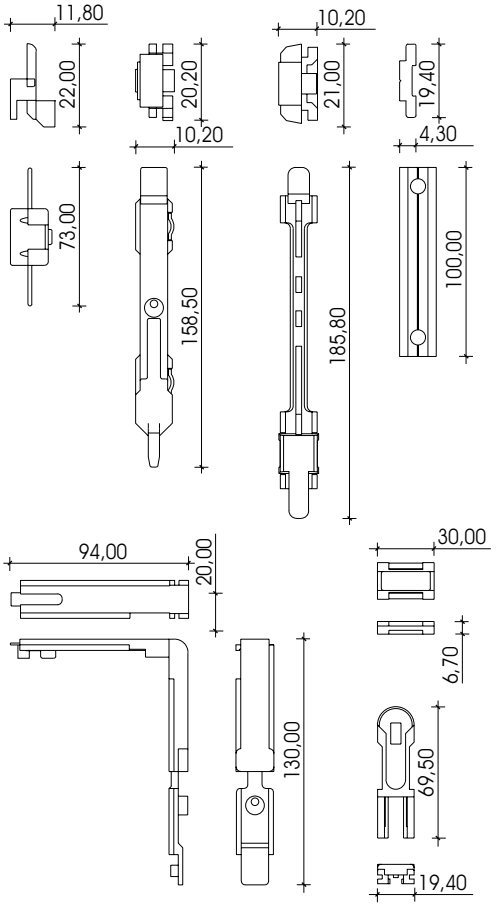	**390.500200** 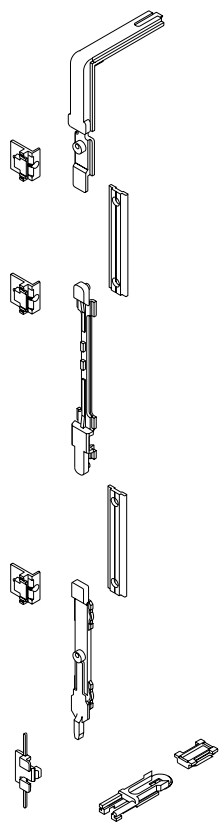
Scissor arm 300 mm for TILD and TURN **Material:** galvanised steel **Color:** mill finish	**390.00300**	 **For profiles** All frames and sashes Arm 300 for leaves from 375 to 554 mm wide	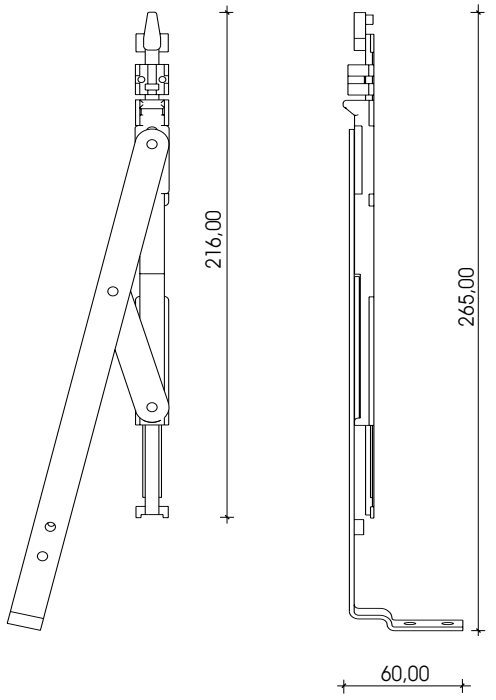	**390.00300** 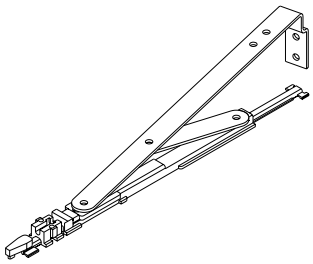

Tilt and turn mechanism

Description		Application	Dimensions	Isometric view
Scissor arm 600 mm for TILD and TURN **Material:** galvanised steel **Color:** mill finish	**390.00460**	 **For profiles** All frames and sashes Arm 460 for leaves from 555 to 1700 mm wide	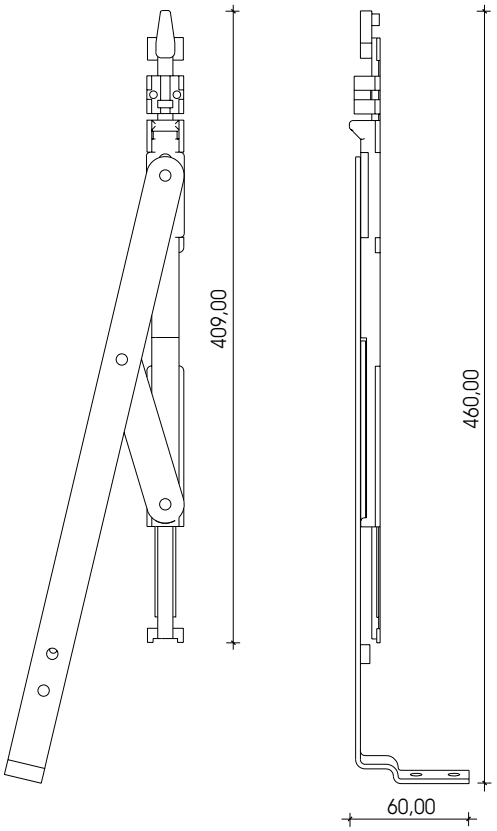	**390.00460** 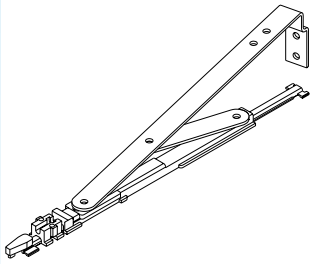
Additional scissor for large spans **Material:** aluminium **Color:** mill finish	**390.00501**	 **For profiles** All frames and sashes	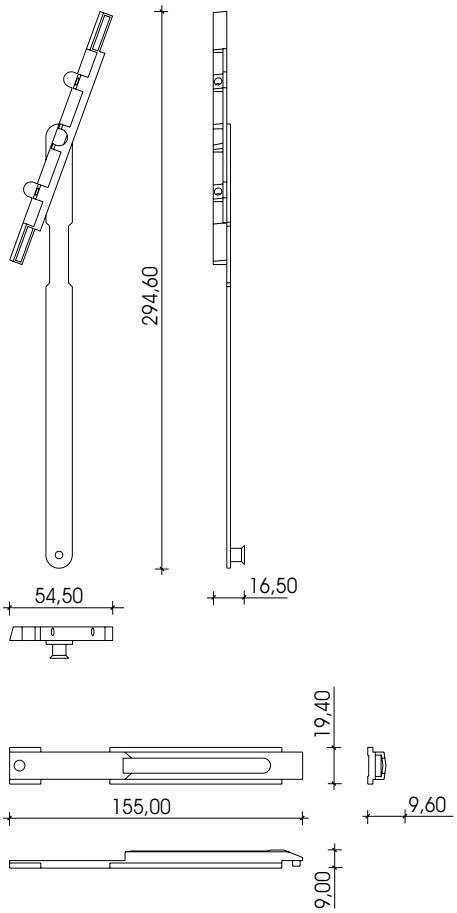	**390.00501** 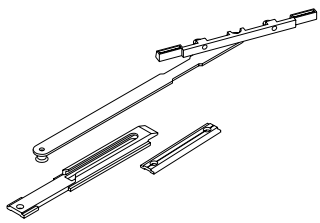

Tilt and turn mechanism

Description		Application	Dimensions	Isometric view
Additional lockset **Material:** aluminium **Color:** mill finish	**390.50110**	 **For profiles** All frames and sashes	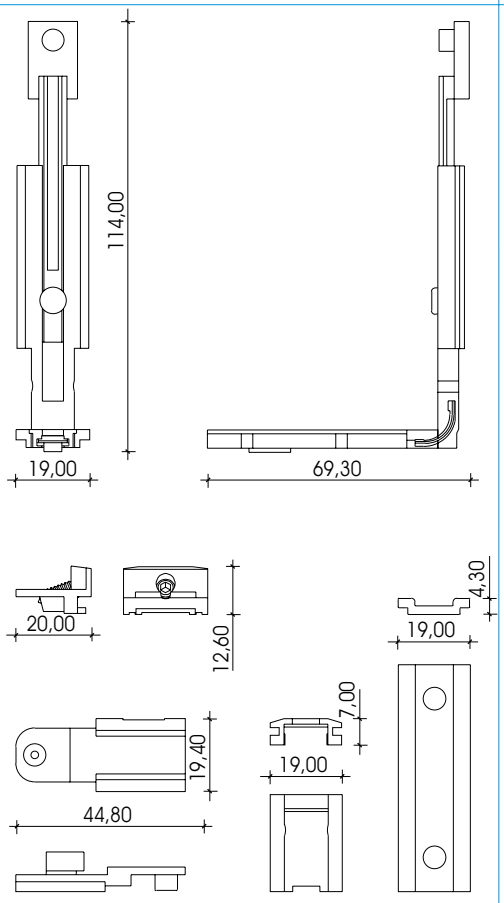	**390.50110** 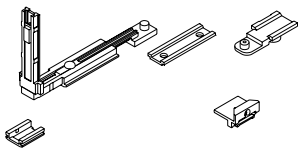
Central latch kit for the coupled wing **Material:** aluminium **Color:** black,white	**474.22010**	 **For profiles** All frames and sashes		
Aluminium latch for transom **Material:** aluminium **Color:** black,white	**470.55101**	 **For profiles** All frames and sashes	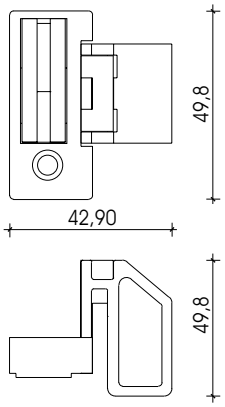	**470.55101** 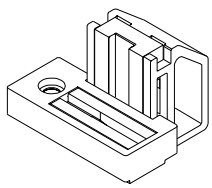

TILT AND TURN MECHANISMS

ERRETI-AC5000

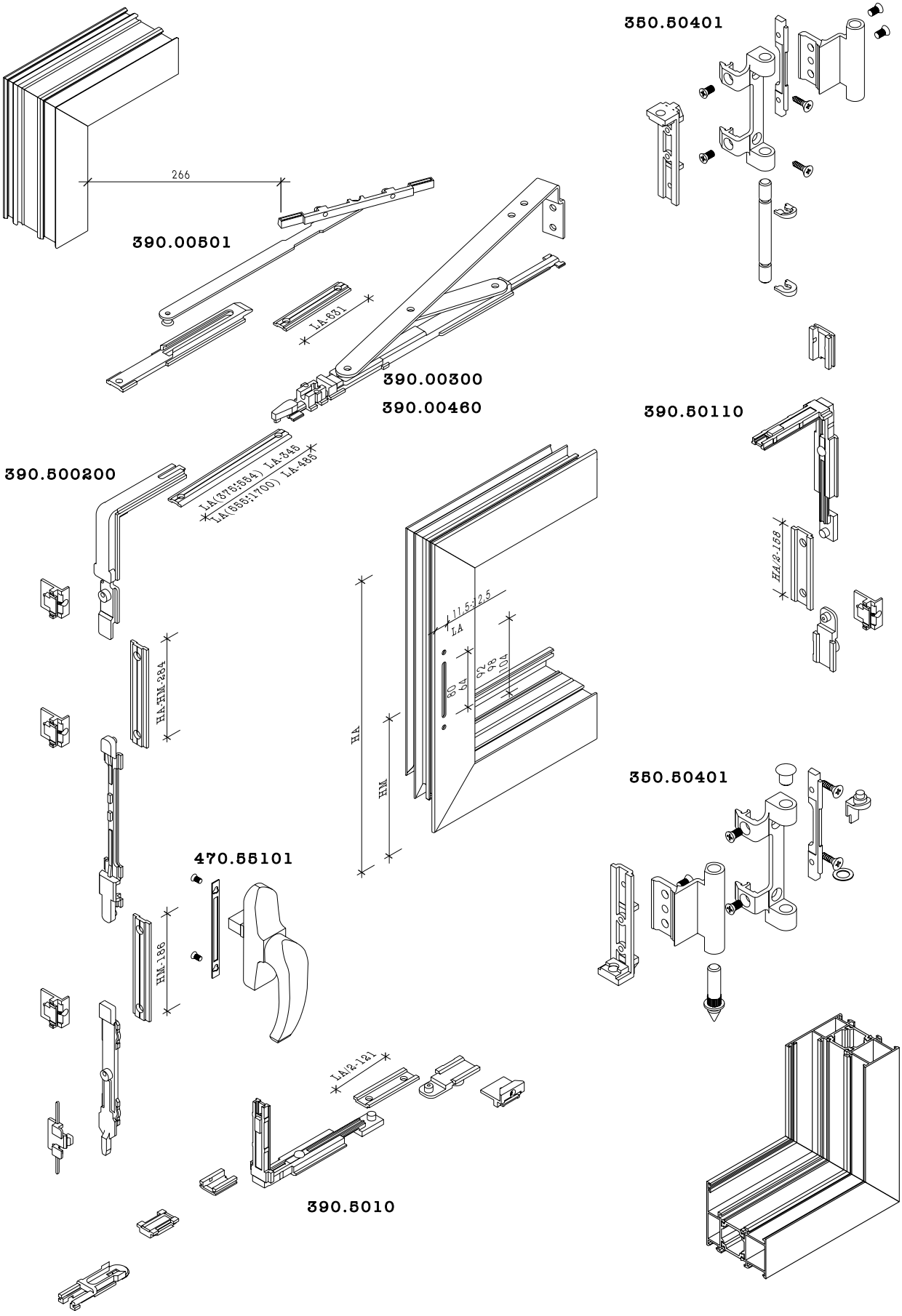

TILT AND TURN MECHANISMS

ROTO-ALU 500 DK

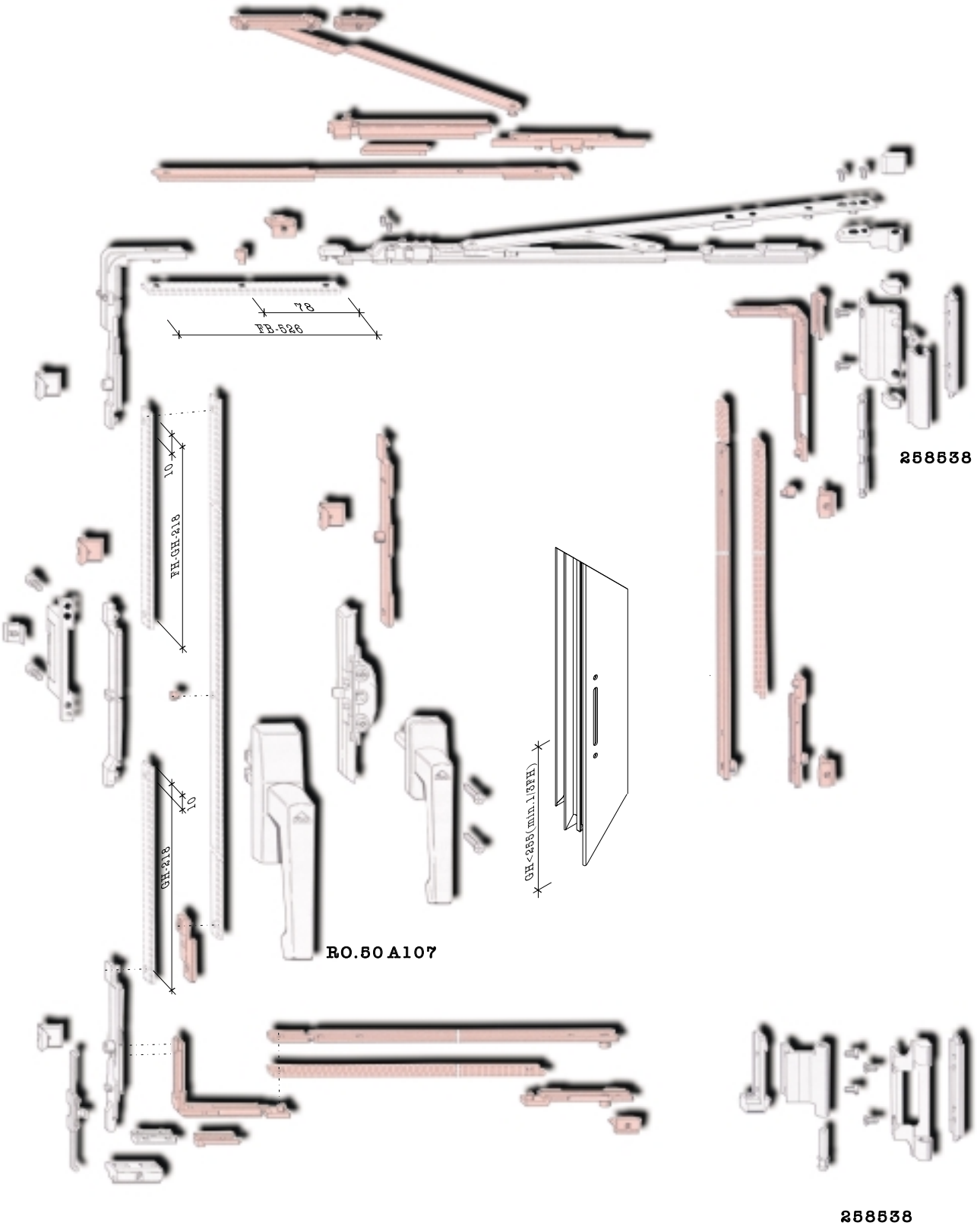

Aluminium angles for glazing bead

Description		Application	Dimensions	Isometric view
Aluminium angle for glazing bead **Material:** aluminium **Color:** mill finish	**170.60561**	 **For profile** M11461	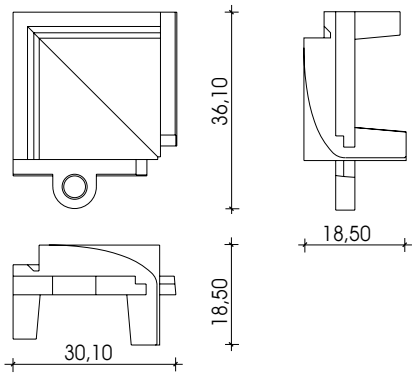	**170.60561** 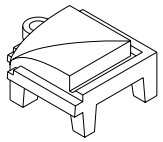
Aluminium angle for glazing bead **Material:** aluminium **Color:** mill finish	**170.60562**	 **For profile** M11462	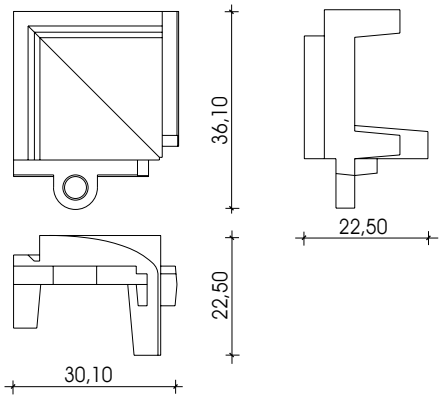	**170.60562** 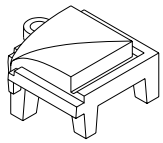
Aluminium angle for glazing bead **Material:** aluminium **Color:** mill finish	**170.60563**	 **For profile** M11463	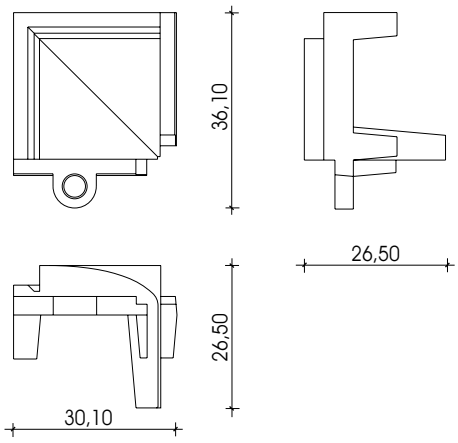	**170.60563** 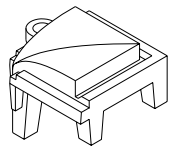
Aluminium angle for glazing bead **Material:** aluminium **Color:** mill finish	**170.60564**	 **For profile** M11464	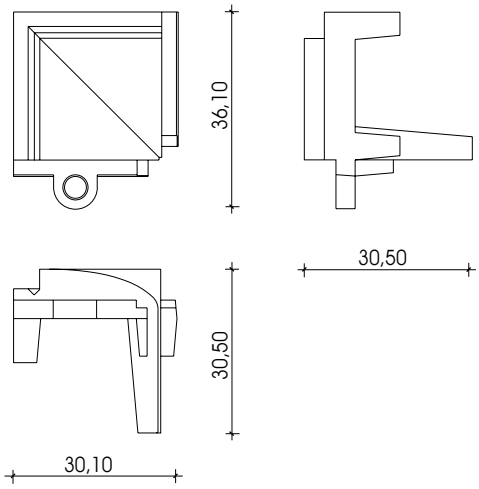	**170.60564** 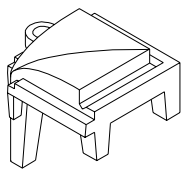

Aluminium angles for glazing bead

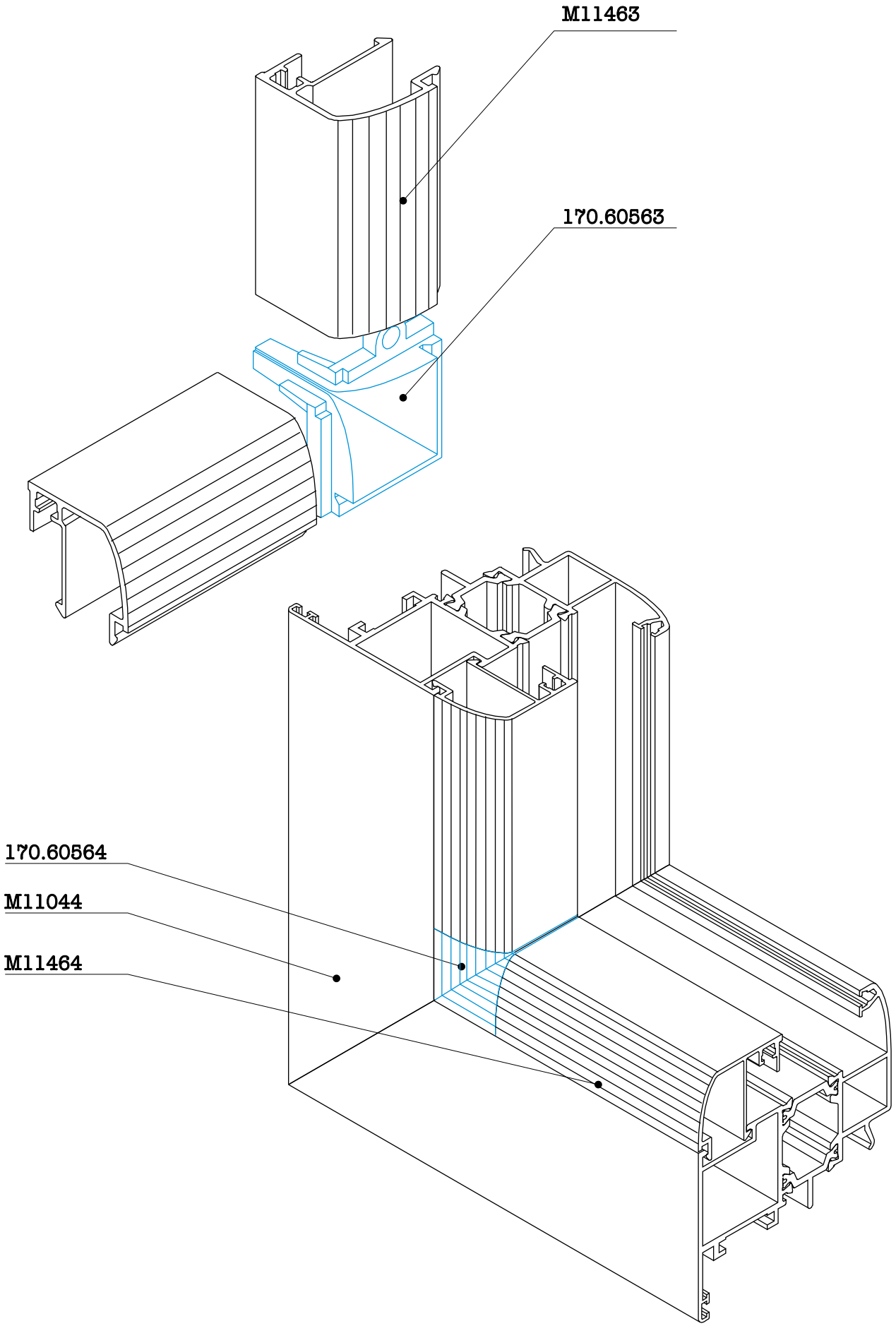

Mechanism for pivot window

Description		Application	Dimensions	Isometric view
Mechanism for pivot window **Material:** steel **Color:** black	**350.00230**	 **For profile** M11148,M11152	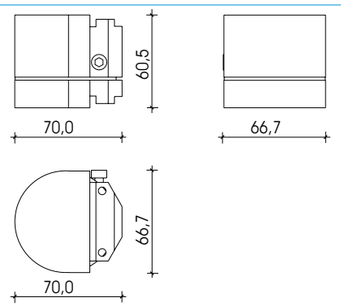	**350.00230** 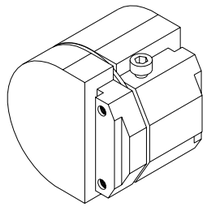

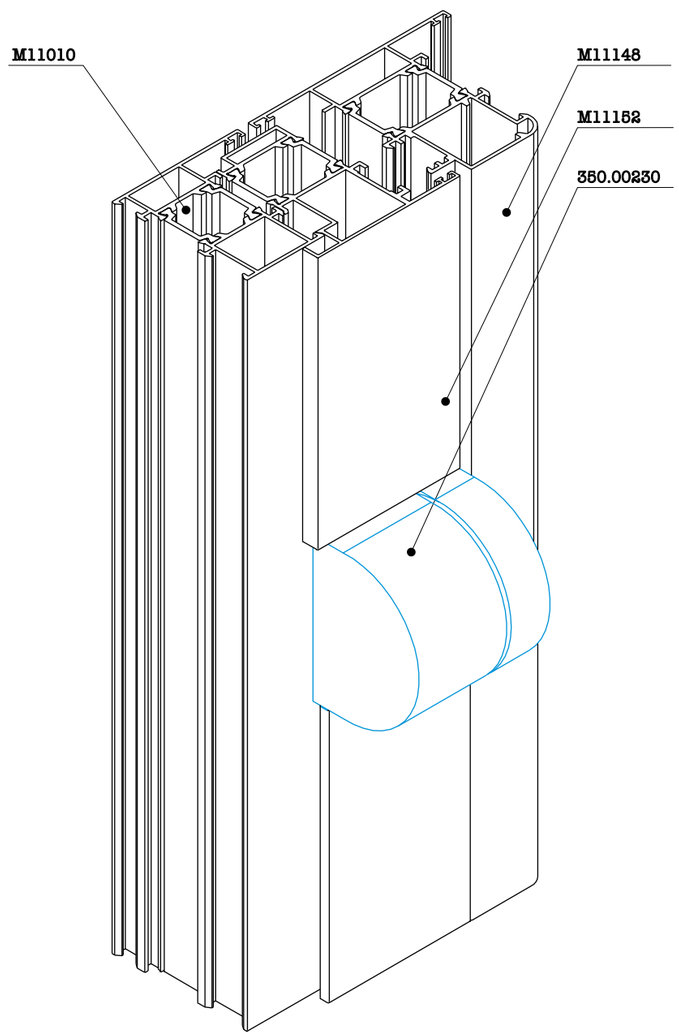

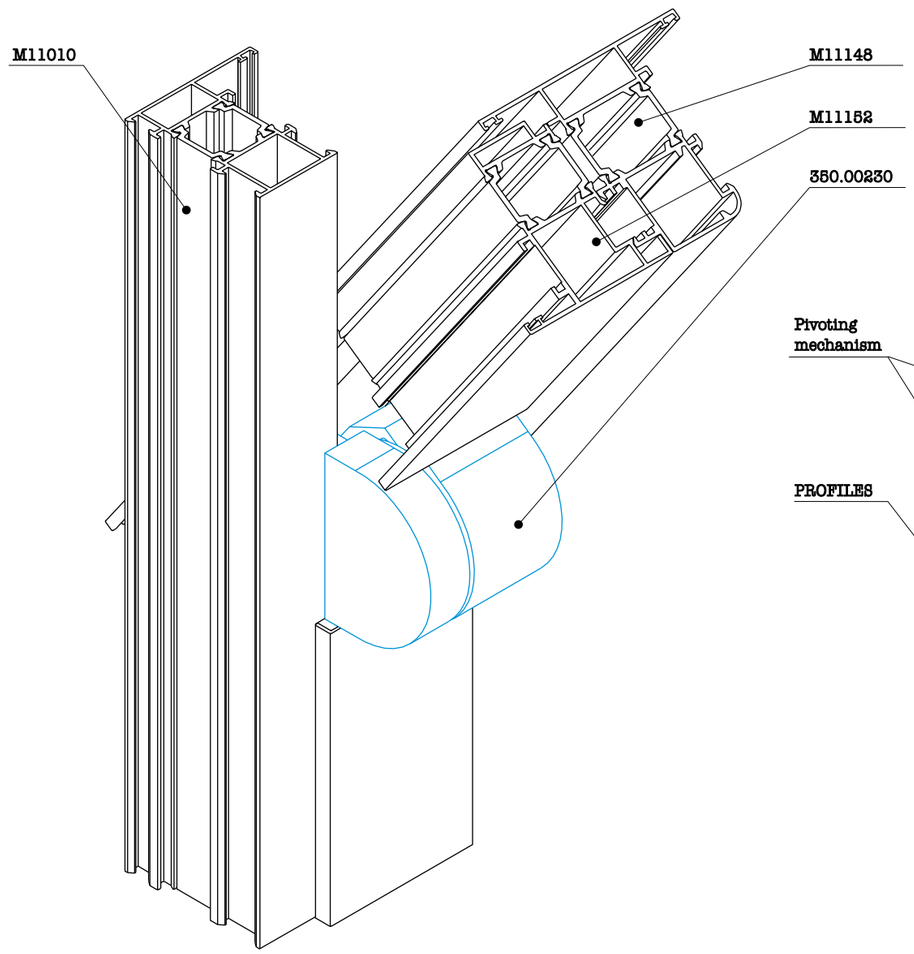

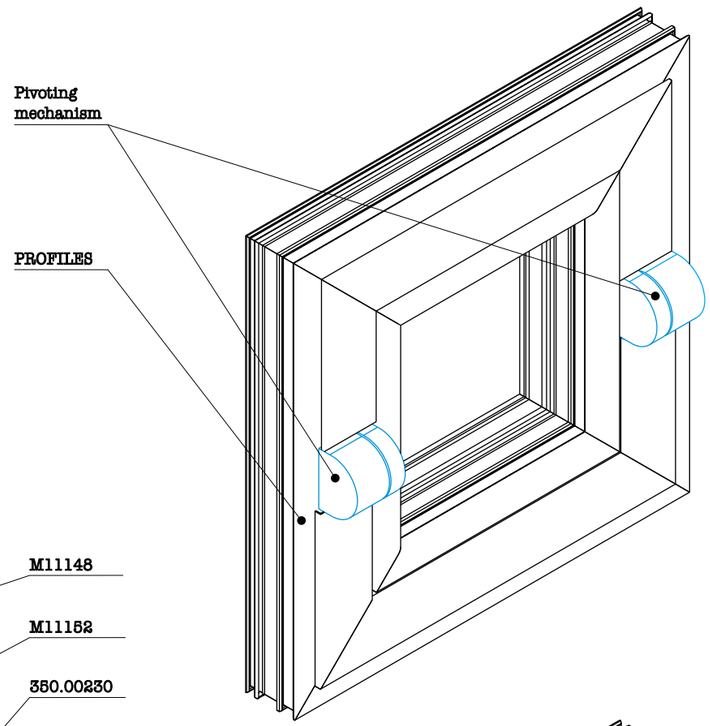

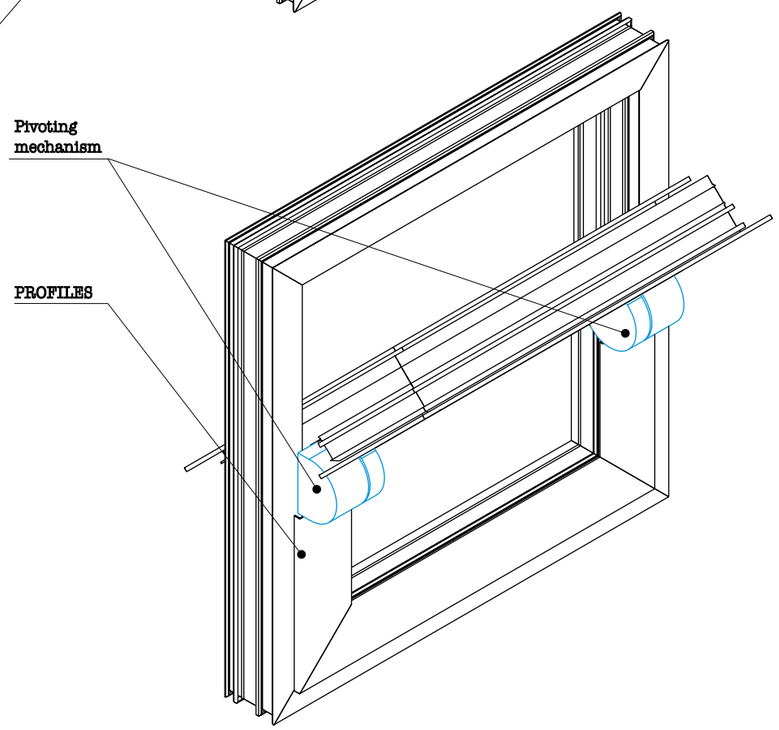

Mechanism for “allez-retour” door

Description		Application	Dimensions	Isometric view
Mechanism for “allez-retour” door **Material:** aluminium **Color:** mill finish	350.00003	 **For profile** All frames and sashes	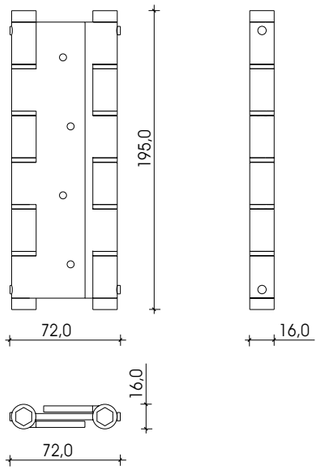	350.00003 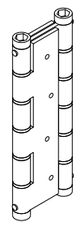

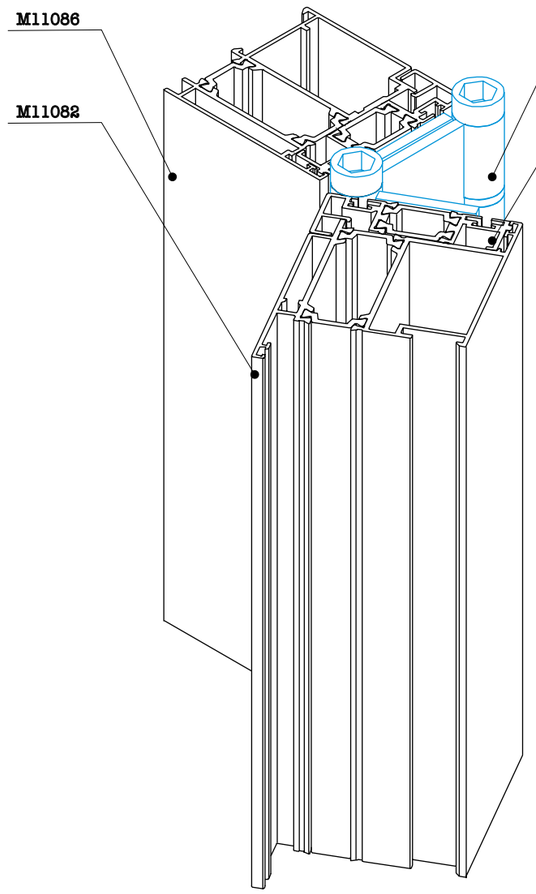

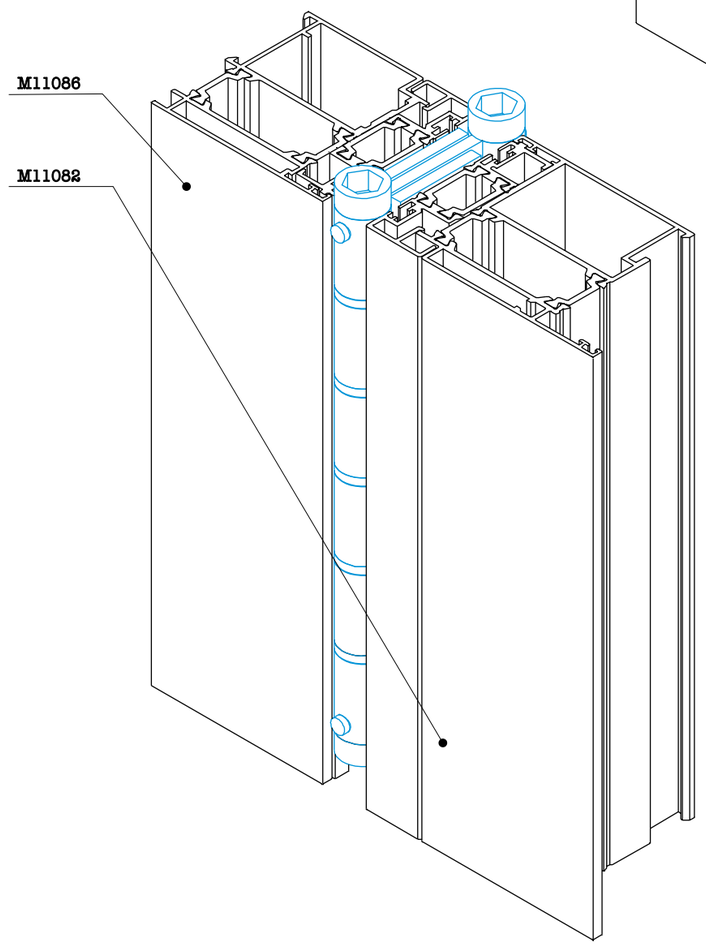

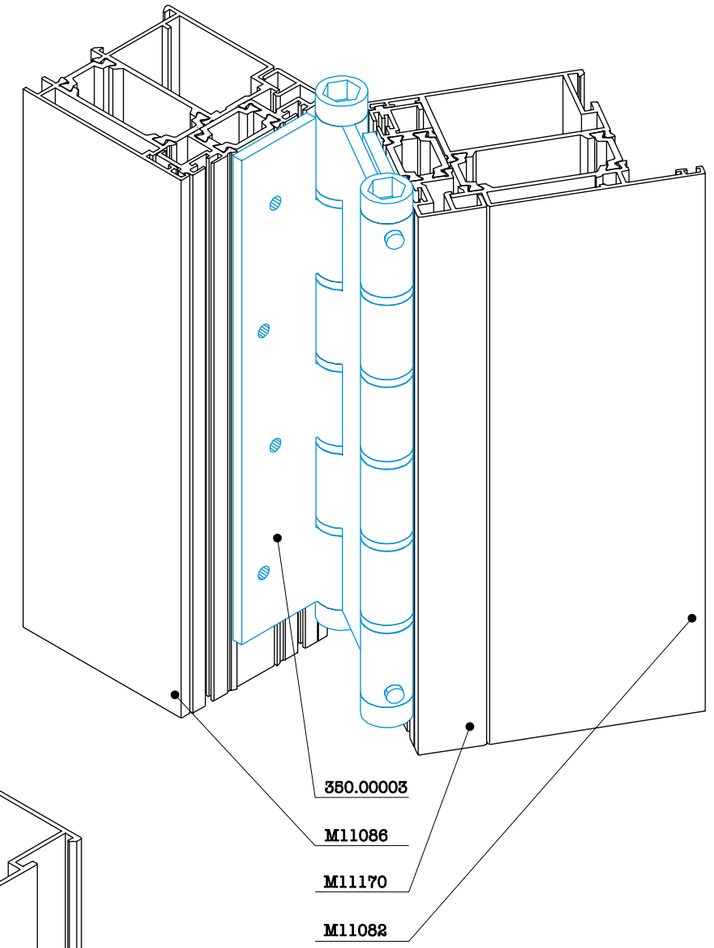

Plastic end caps

Description		Application	Dimensions	Isometric view
Plastic end cap for M11058 **Material:** polyamide **Color:** black	**300.11058**	 **For profile** M11058	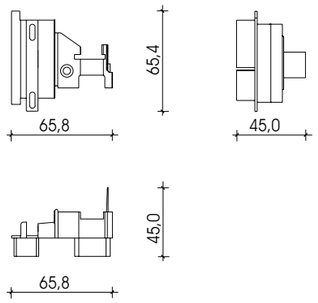	**300.11058** 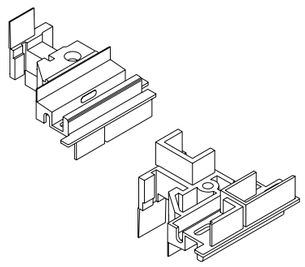
Plastic end cap for M11258 **Material:** polyamide **Color:** black	**300.11258**	 **For profile** M11258	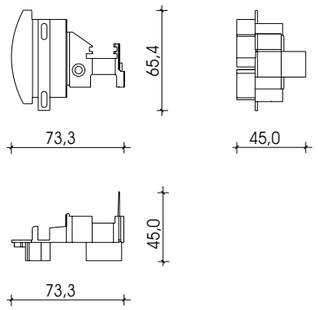	**300.11258** 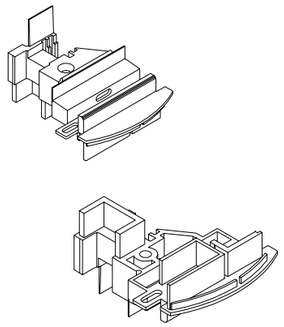
Plastic end cap for M11558 **Material:** polyamide **Color:** black	**300.11558**	 **For profile** M11558	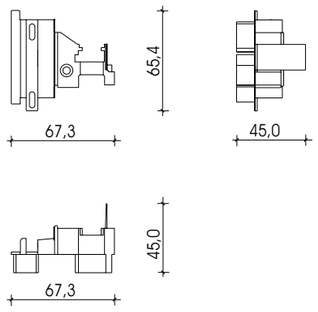	**300.11558** 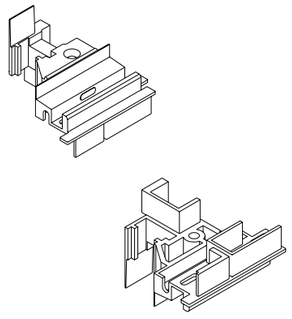

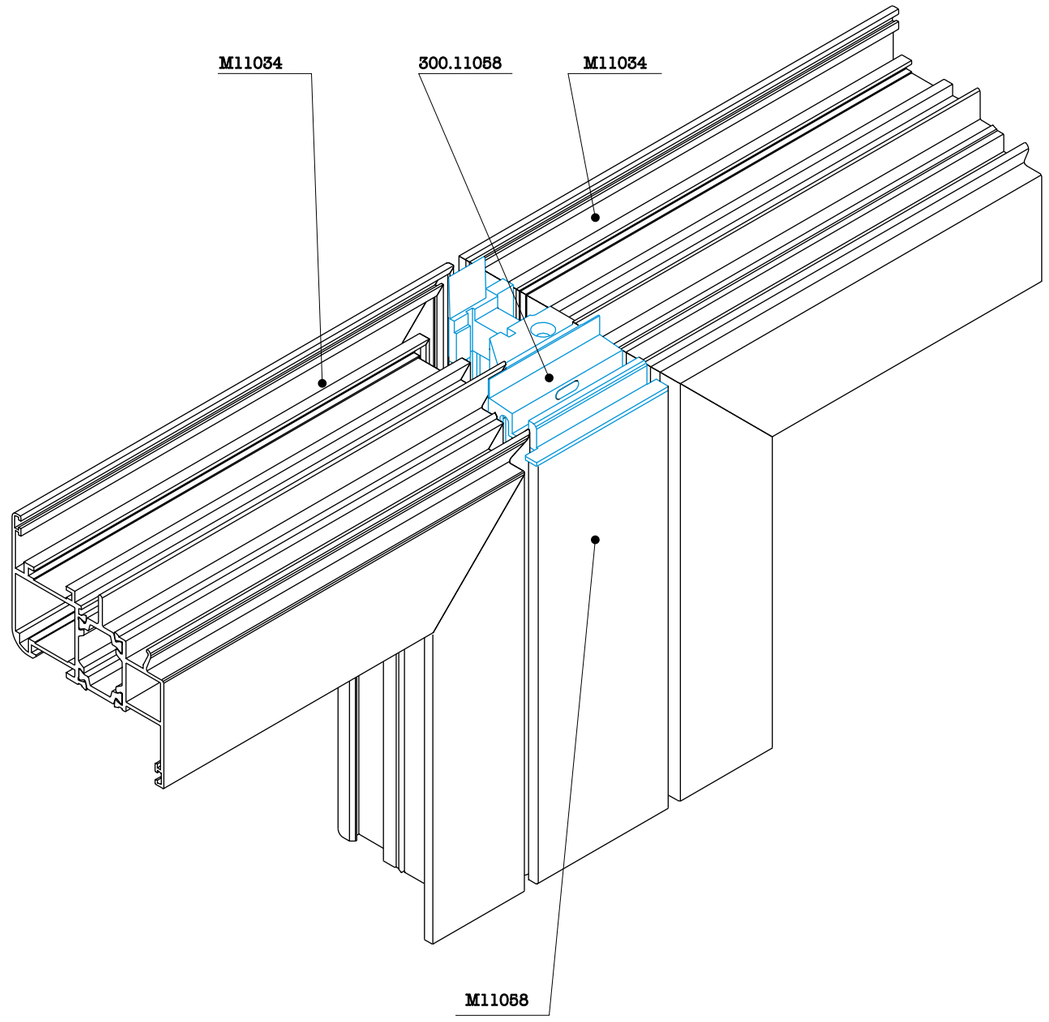

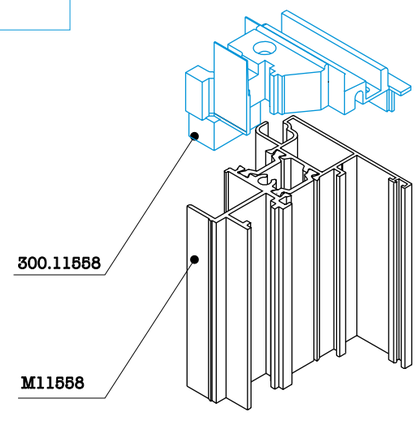

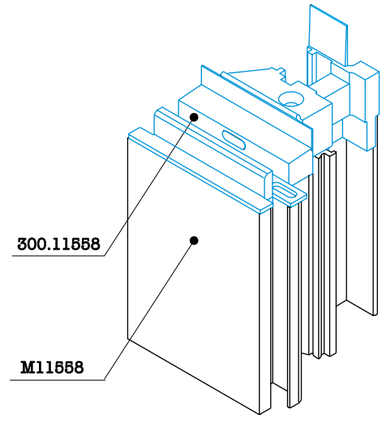

Plastic end caps

Description		Application	Dimensions	Isometric view
Plastic end cap for M11156 **Material:** polyamide **Color:** black	**300.11156**	 **For profile** M11156	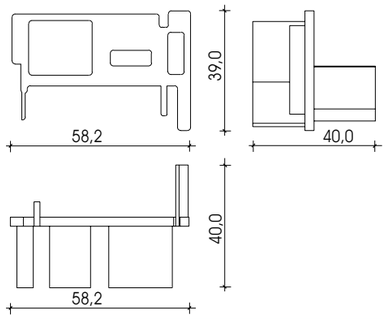	**300.11156** 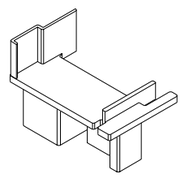
Plastic end cap for M11158 **Material:** polyamide **Color:** black	**300.11158**	 **For profile** M11158	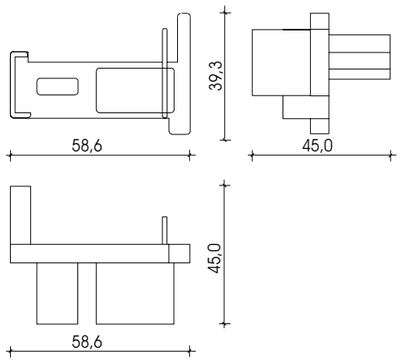	**300.11158** 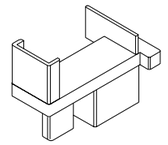
Plastic end cap for M11198 **Material:** polyamide **Color:** black	**300.11198**	 **For profile** M11198	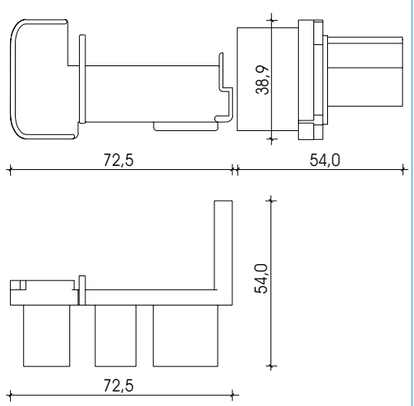	**300.11198** 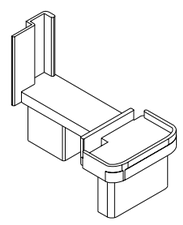

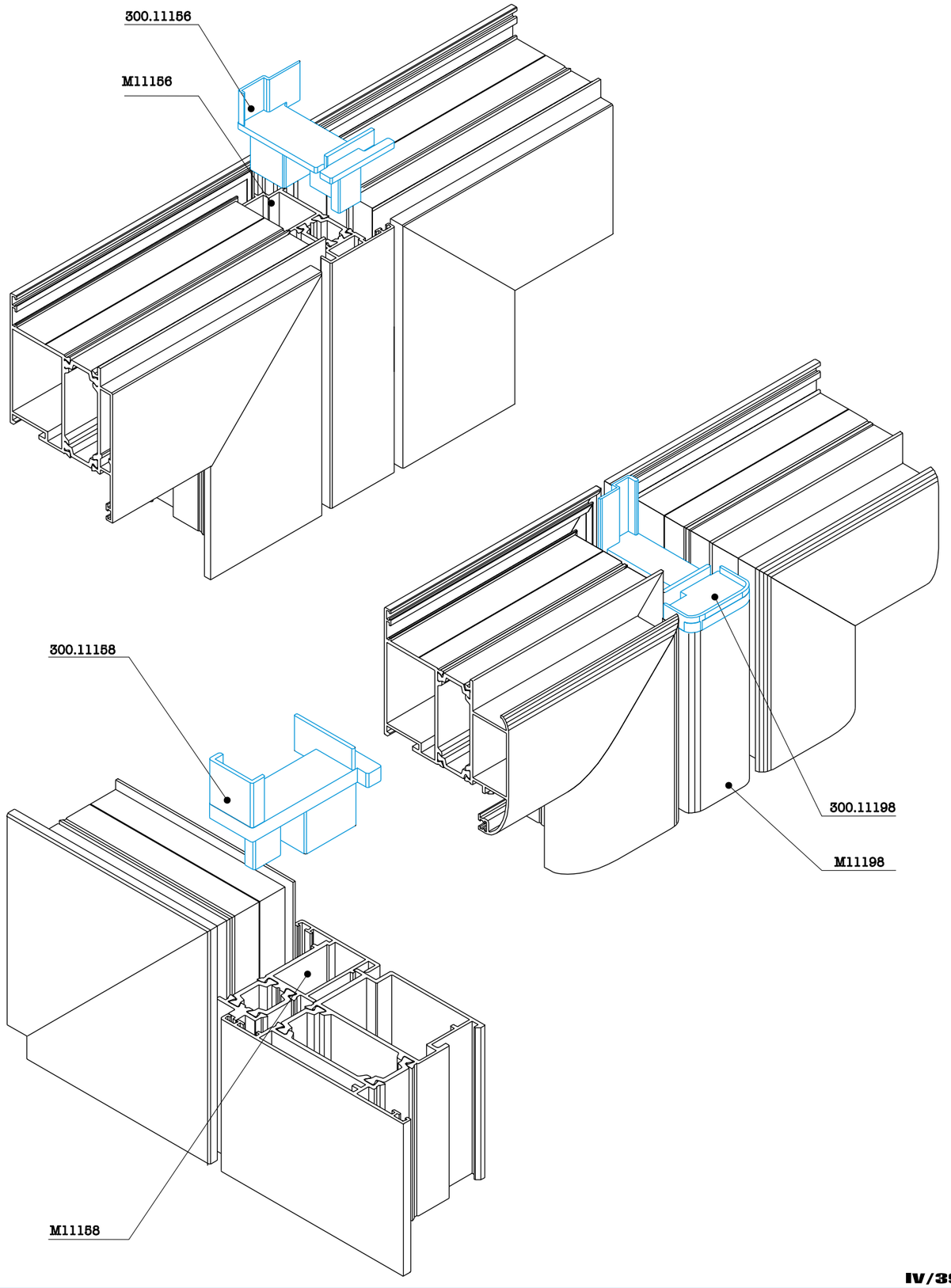

Plastic end caps

Description		Application	Dimensions	Isometric view
Plastic end cap for M11270 **Material:** polyamide **Color:** black	**310.11170**	 **For profile** M11170	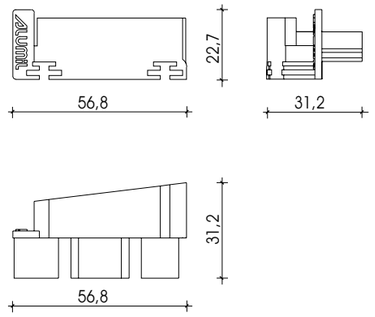	**310.11170** 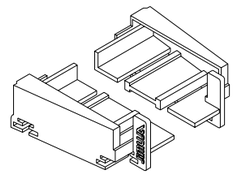
Plastic end cap for M11270 **Material:** polyamide **Color:** black	**310.11270**	 **For profile** M11270	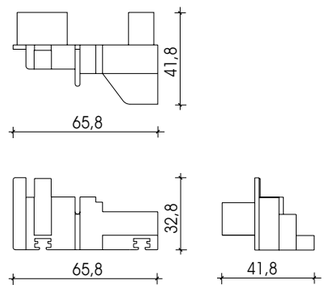	**310.11270** 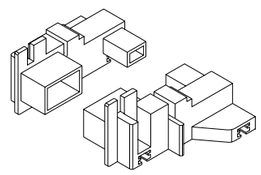

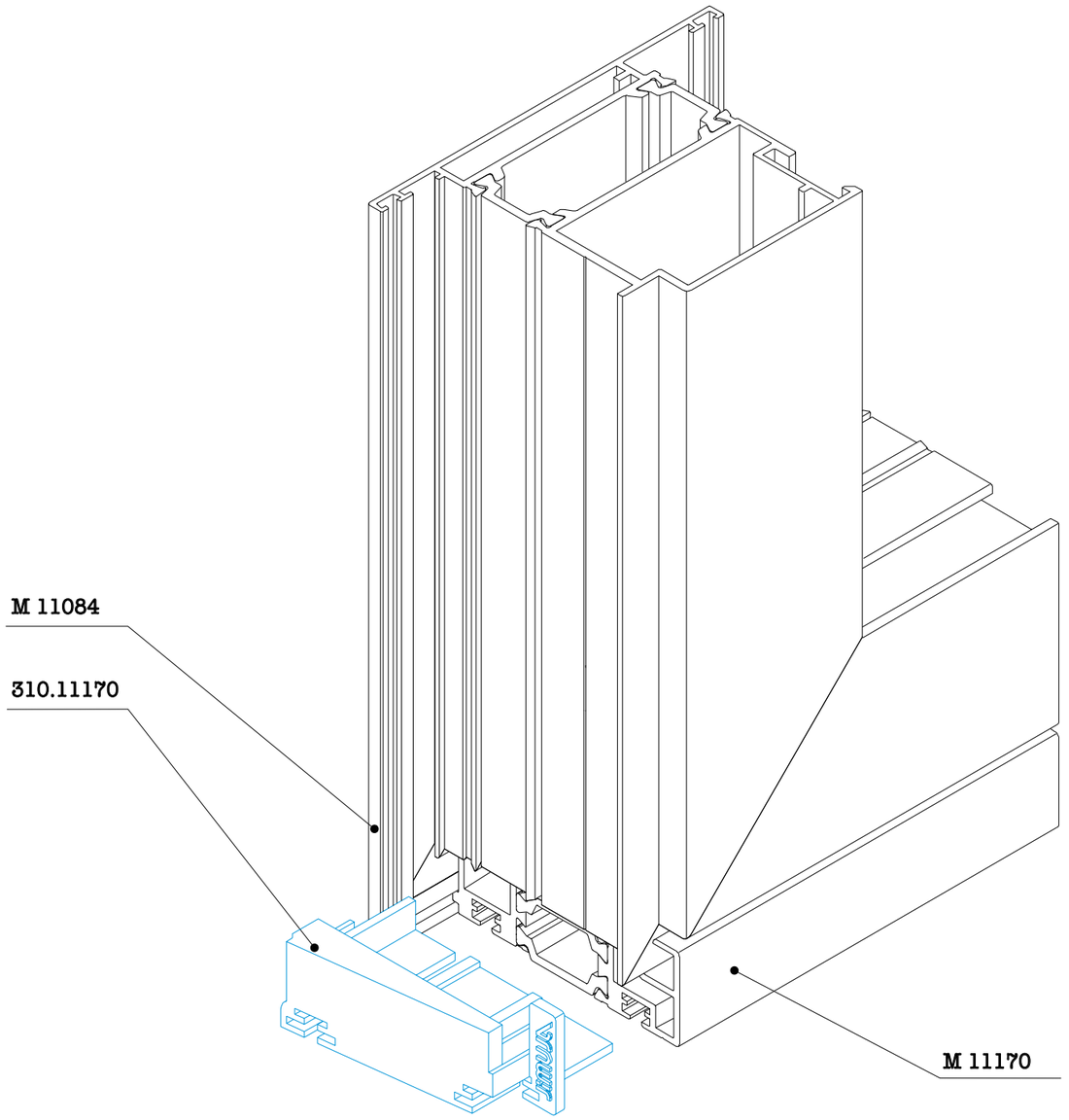

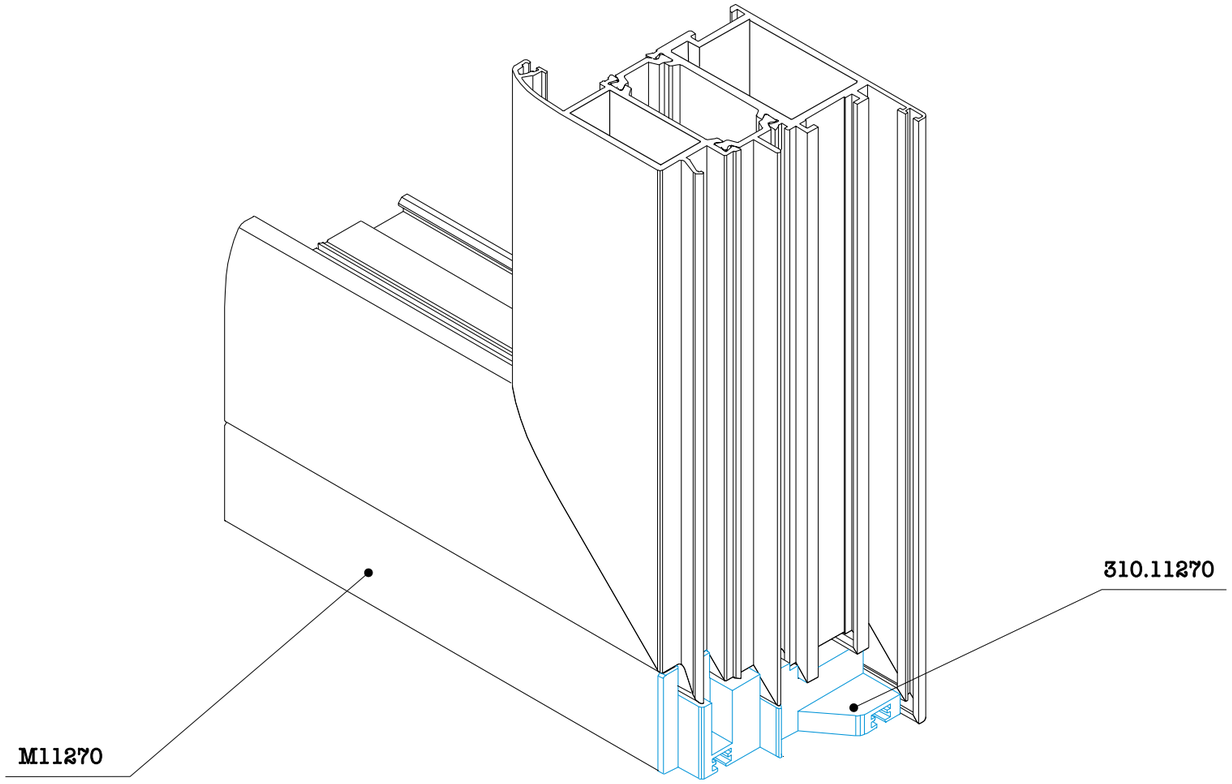

Plastics end caps

Description		Application	Dimensions	Isometric view
Plastic end cap for M11274 **Material:** polyamide **Color:** black	**310.11274**	 **For profile** M 11274	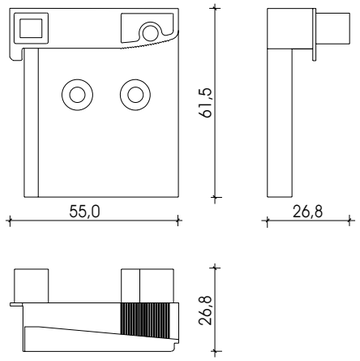	**310.11274** 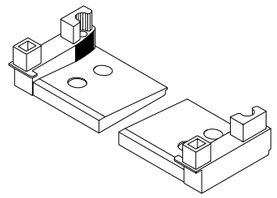
Plastic accessorie for threshold **Material:** polyamide **Color:** black	**310.11082**	 **For profile** M 11082	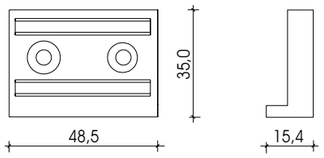	**310.11082** 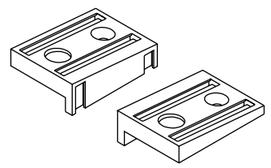
Plastic accessorie for water cap **Material:** polyamide **Color:** black	**310.11226**	 **For profile** For M11226	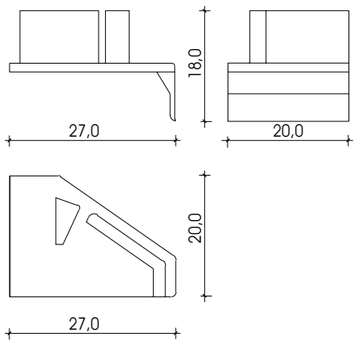	**310.11226** 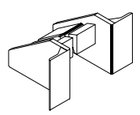

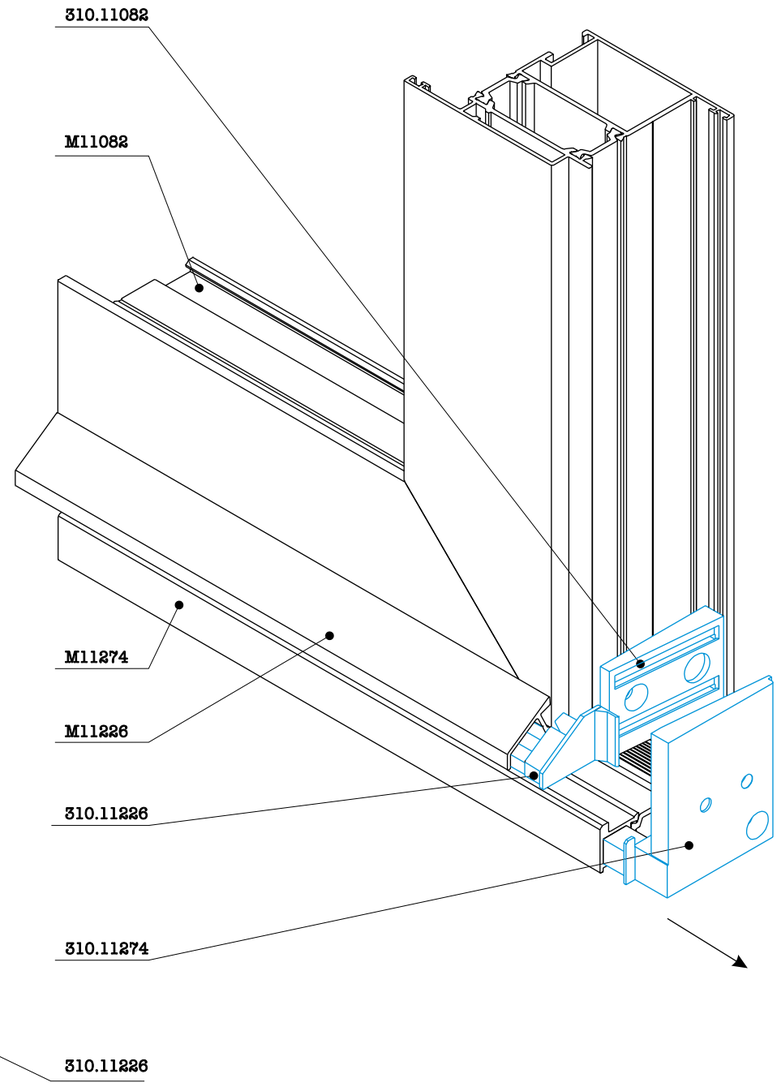

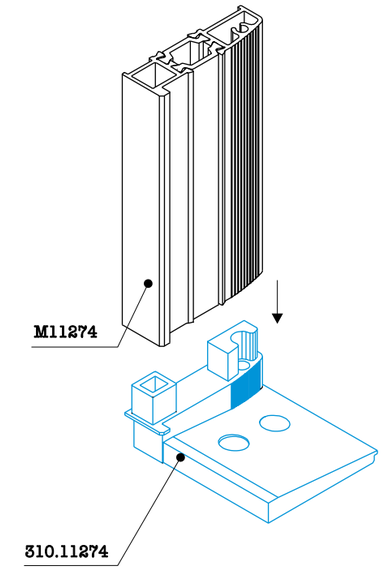

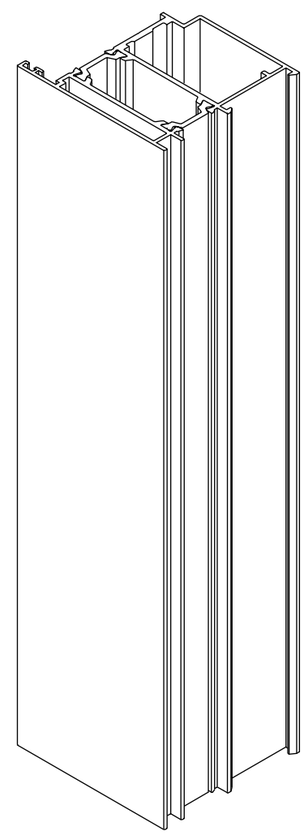

Plastics end caps

Description		Application	Dimensions	Isometric view
Set of plastics for M11474(M11574) **Material:** polyamide **Color:** black	**310.11474** **310.11574**	 **For profile** M11474 M11574	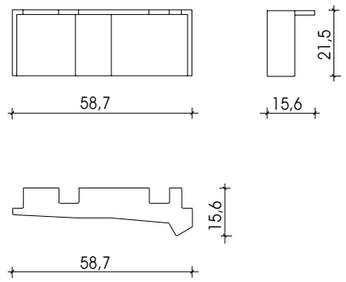	**310.11574** 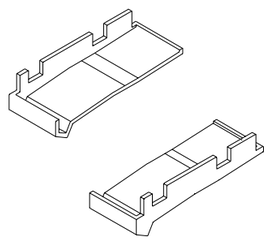
		 For profile M11474	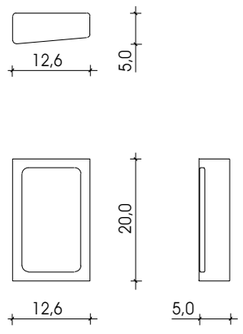	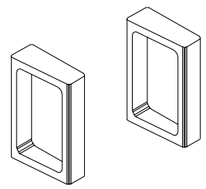
		 For profile M11474	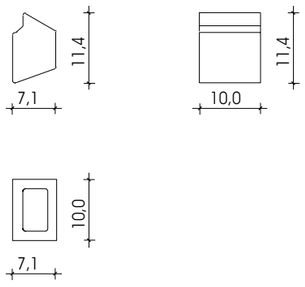	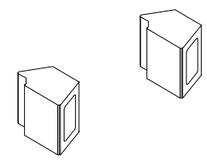
Plastic clip for M11474 **Material:** polyamide **Color:** black	**470.11477**	 **For profile** M 11474 , M 11574	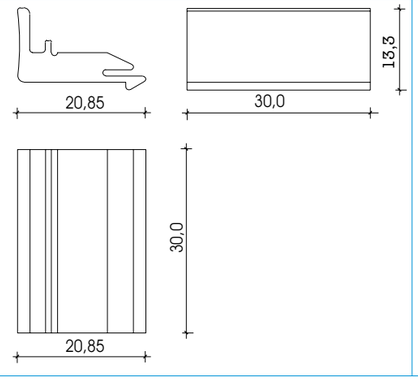	**470.11477** 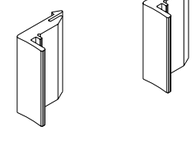

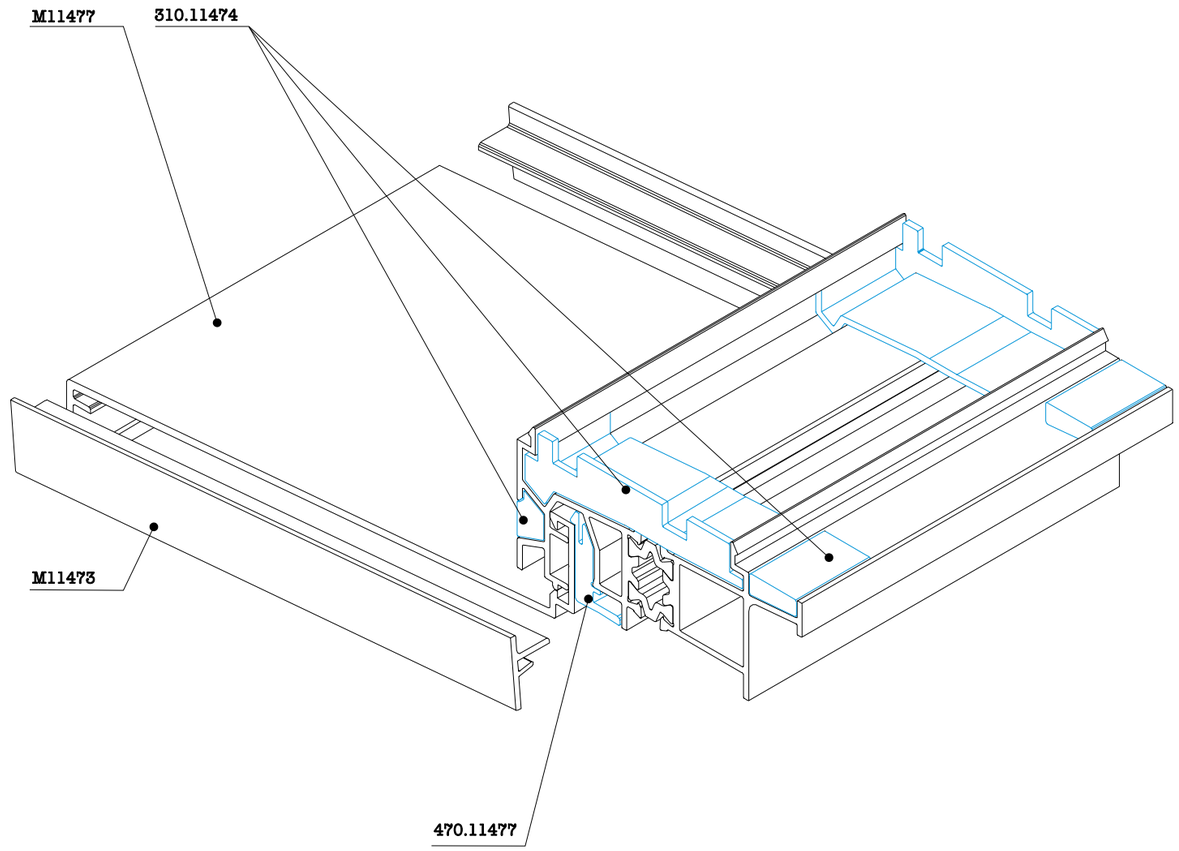

NOTE:
The sets 310.11574 and 310.11474 includes 2 middle end covers , 2 inside caps , and 2 outside caps.

Gaskets

PR.10

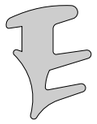

Glazing gasket press-in-10mm
EPDM

PR.8

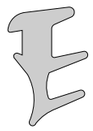

Glazing gasket press-in-8mm
EPDM

PR.7

Glazing gasket press-in-7mm
EPDM

250.15513

Exterior isolation gasket
EPDM

250.15520

Exterior isolation gasket
EPDM

250.15528

Exterior isolation gasket
EPDM

PR.6

Glazing gasket press-in-6mm
EPDM

PR.5

Glazing gasket press-in-5mm
EPDM

PR.4

Glazing gasket press-in-4mm
EPDM

250.11270

Gasket seal for exterior doors
EPDM

250.11170

Gasket seal for exterior doors
EPDM

250.11226

Gasket seal for exterior doors
EPDM

PR.3

Glazing gasket press-in-3mm
EPDM

200.68600

Glazing gasket exterior-3mm
EPDM

200.68610

Glazing gasket press-in-5mm
EPDM

220.11001

Gasket exterior seal
EPDM

220.11002

Gasket interior seal
EPDM

220.63000

250.11164

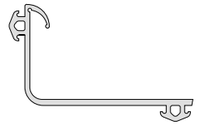

Gasket seal for M11064
EPDM

210.11000

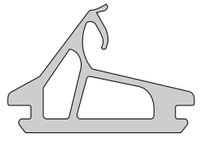

Central seal
EPDM

200.68310

Glazing gasket exterior-3mm
EPDM

200.01154

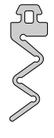

Thermal isolation gasket
EPDM

250.11120

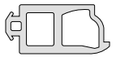

Gasket seal for M11120
EPDM

220.60000

Gasket interior seal
EPDM

230.00959

Gasket interior seal
EPDM

Gaskets,plastics,brushes

620.02012

Brush No12

230.96000

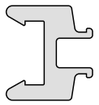

720.90200

Plastics for screw

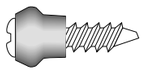

470.00216

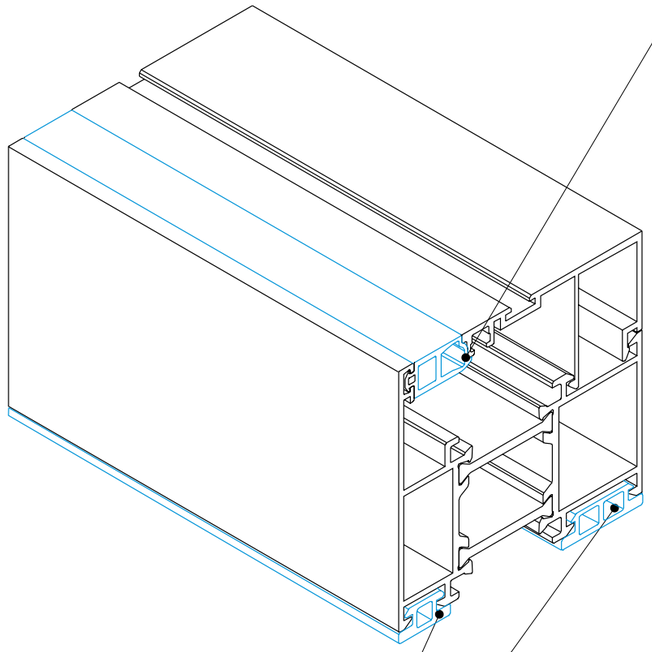

250.11120

20068600

210.11000

250.11226

220.11002

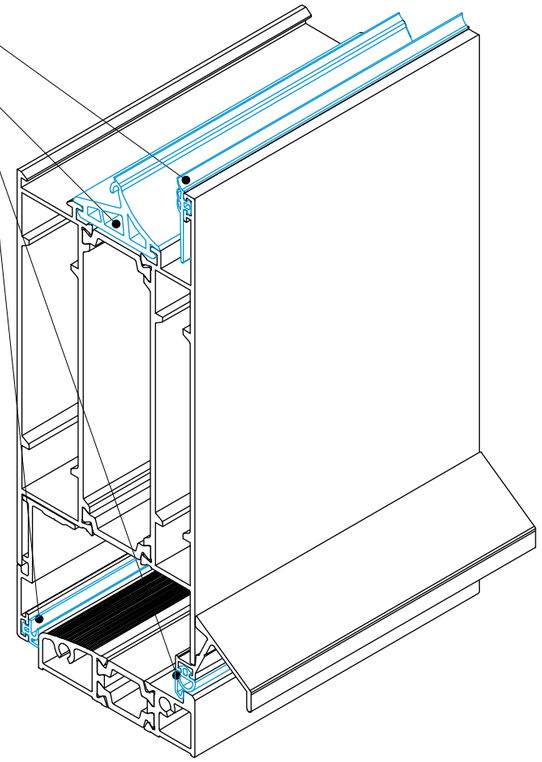

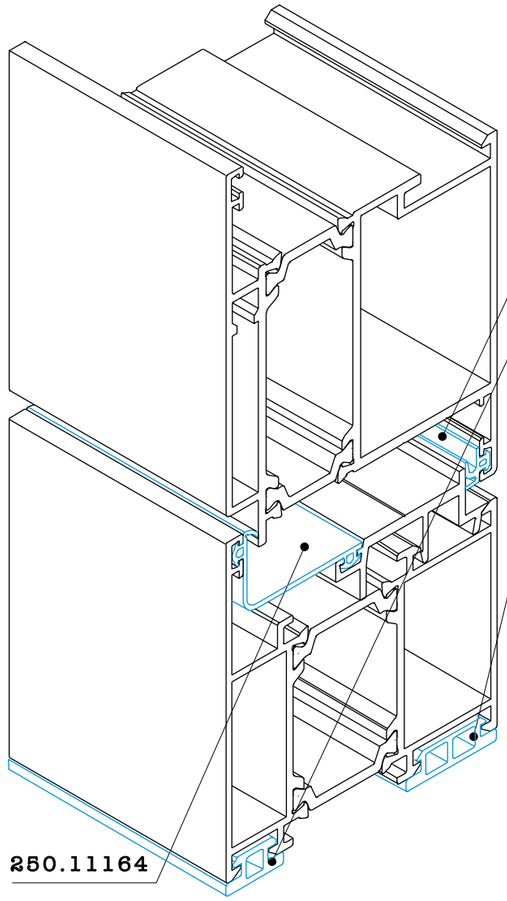

220.11001

250.15513

250.15520

230.00959

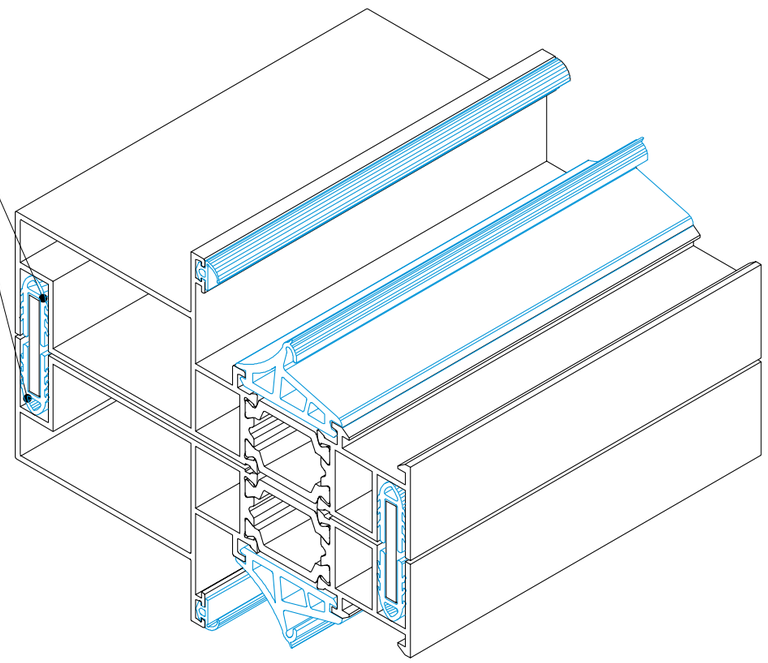

250.11164

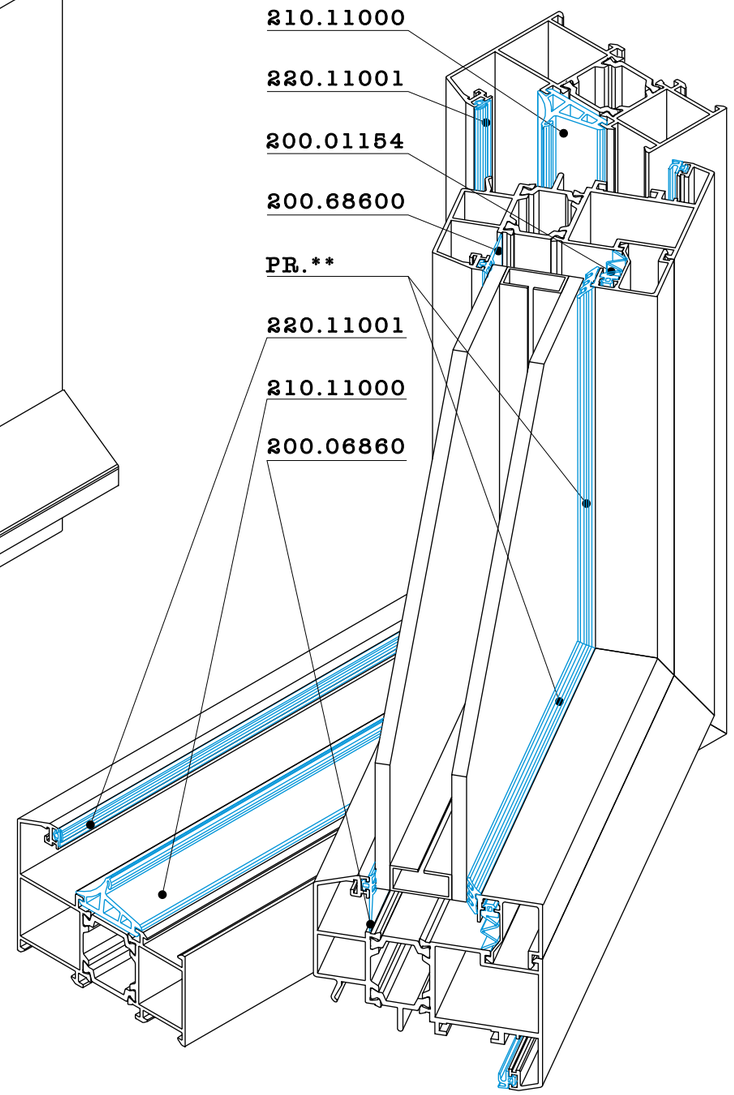

210.11000

220.11001

200.01154

200.68600

PR.**

220.11001

210.11000

200.06860

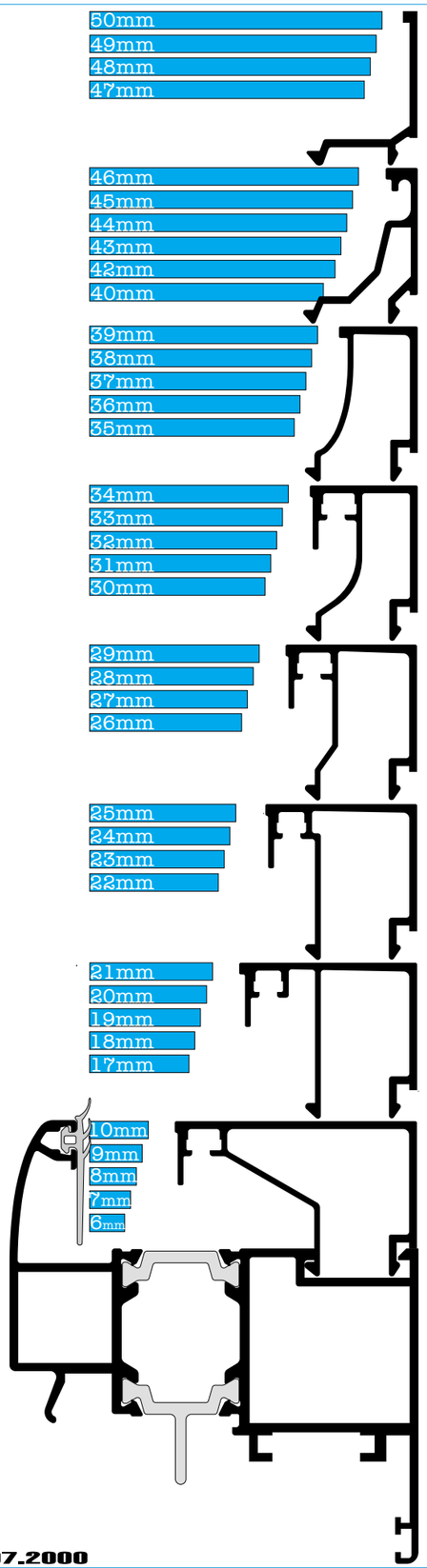

PR.10

INT. GASKET PRESS-IN 10 mm

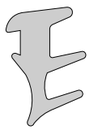

PR.8

INT. GASKET PRESS-IN 8mm

PR.7

INT. GASKET PRESS-IN 7mm

PR.6

INT. GASKET PRESS-IN 6mm

PR.5

INT. GASKET PRESS-IN 5mm

PR.4

INT. GASKET PRESS-IN 4mm

PR.3

INT. GASKET PRESS-IN 3mm

GLAZING BEAD	EXT. GASKET	INT. GASKET	GLAZING AREA	(mm)
M 11455	200.68600	PR.8	single glazing	6
	" "	PR.7	" "	7
	" "	PR.6	" "	8
	" "	PR.5	" "	9
	" "	PR.4	" "	10
M 11454	200.68600	PR.8	double glazing	17
	" "	PR.7	" "	18
	" "	PR.6	" "	19
	" "	PR.5	" "	20
	" "	PR.4	" "	21
M 11453	200.68600	PR.8	" "	22
	" "	PR.7	" "	23
	" "	PR.6	" "	24
	" "	PR.5	" "	25
M 11452	200.68600	PR.7	" "	26
	" "	PR.6	" "	27
	" "	PR.5	" "	28
	" "	PR.4	" "	29
M 11451	200.68600	PR.7	triple glazing	30
	" "	PR.6	" "	31
	" "	PR.5	" "	32
	" "	PR.4	" "	33
	" "	PR.3	" "	34
M 9312	200.68600	PR.7	" "	35
	" "	PR.6	" "	36
	" "	PR.5	" "	37
	" "	PR.4	" "	38
	" "	PR.3	" "	39
M 946	200.68600	PR.10	" "	40
	" "	PR.8	" "	42
	" "	PR.7	" "	43
	" "	PR.6	" "	44
	" "	PR.5	" "	45
	" "	PR.4	" "	46
M 9313	200.68600	PR.7	" "	47
	" "	PR.6	" "	48
	" "	PR.5	" "	49
	" "	PR.4	" "	50

Gaskets and glazing beads used for various glazing depths

Gaskets,glazing beads

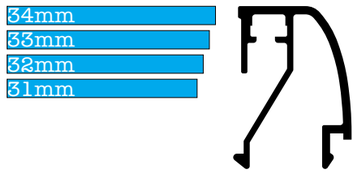

M 11456

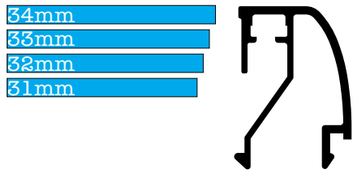

M 11461

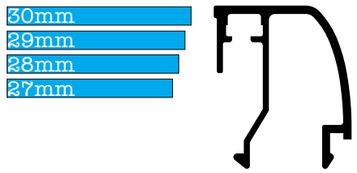

M 11462

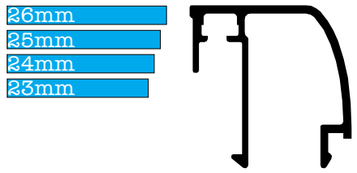

M 11463

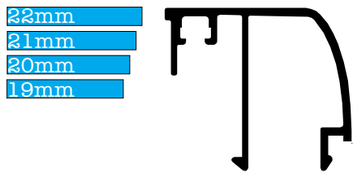

M 11464

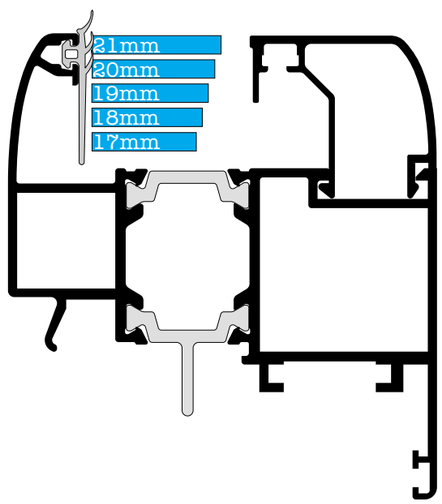

M 11465

PR.10
INT. GASKET PRESS-IN 10 mm

PR.8
INT. GASKET PRESS-IN 8mm

PR.7
INT. GASKET PRESS-IN 7mm

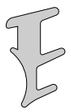

PR.6
INT. GASKET PRESS-IN 6mm

PR.5
INT. GASKET PRESS-IN 5mm

PR.4
INT. GASKET PRESS-IN 4mm

PR.3
INT. GASKET PRESS-IN 3mm

GLAZING BEAD	EXT. GASKET	INT. GASKET	GLAZING AREA	(mm)
M 11465	200.68600	PR.8	double glazing	17
		PR.7	" "	18
		PR.6	" "	19
		PR.5	" "	20
		PR.4	" "	21
M 11464	200.68600	PR.6	" "	19
		PR.5	" "	20
		PR.4	" "	21
		PR.3	" "	22
M 11463	200.68600	PR.6	" "	23
		PR.5	" "	24
		PR.4	" "	25
		PR.3	" "	26
M 11462	200.68600	PR.6	" "	27
		PR.5	" "	28
		PR.4	" "	29
		PR.3	triple glazing	30
M 11461	200.68600	PR.6	" "	31
		PR.5	" "	32
		PR.4	" "	33
		PR.3	" "	34
M 11456	200.68600	PR.6	" "	31
		PR.5	" "	32
		PR.4	" "	33
		PR.3	" "	34

Gaskets and glazing beads used for various glazing depths

KICK PLATE SEALINGS

Description		Application	Dimensions	Isometric view
Kick plate sealing **Material:** aluminium+EPDM **Color:** mill finish	**471.00800**	 **For :** Kick plates	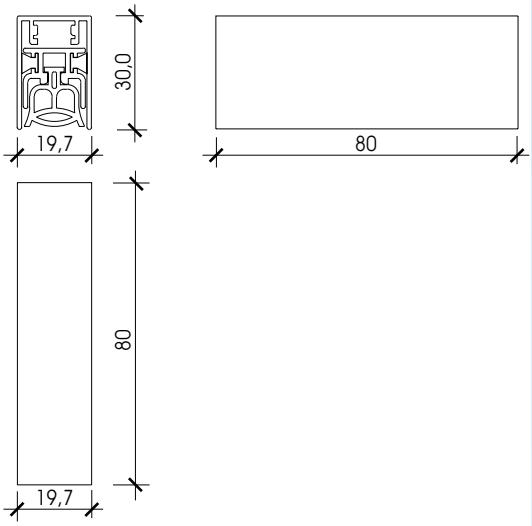	**471.00800** 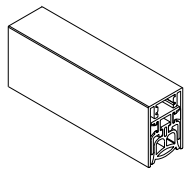
Kick plate sealing **Material:** aluminium+EPDM **Color:** mill finish	**471.00900**	 **For :** Kick plates	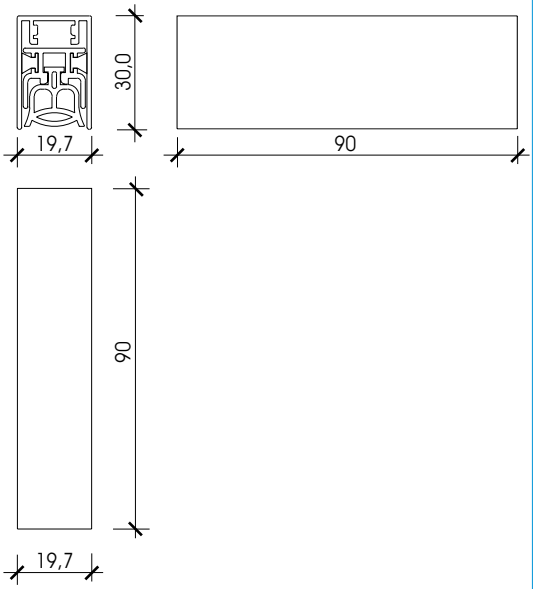	**471.00900** 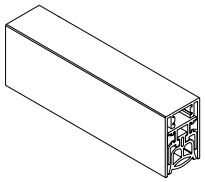
Kick plate sealing **Material:** aluminium+EPDM **Color:** mill finish	**471.01000**	 **For :** Kick plates	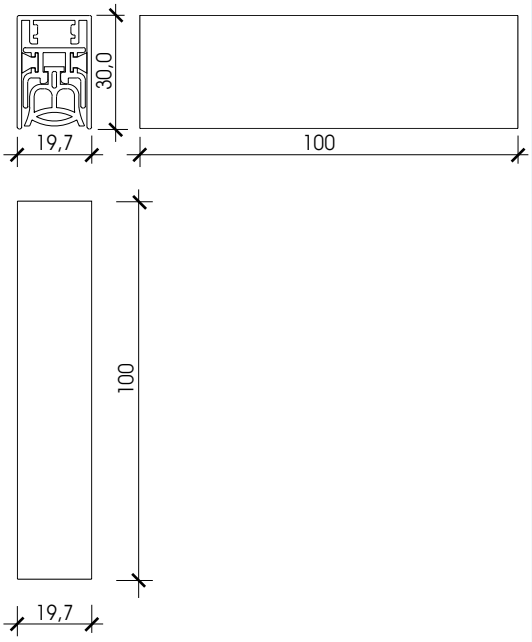	**471.01000** 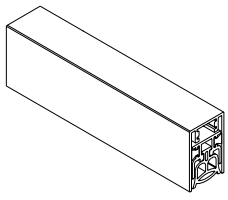

KICK PLATE SEALINGS

Description		Application	Dimensions	Isometric view
Kick plate sealing **Material:** aluminium+EPDM **Color:** mill finish	**471.01100**	 **For :** Kick plates	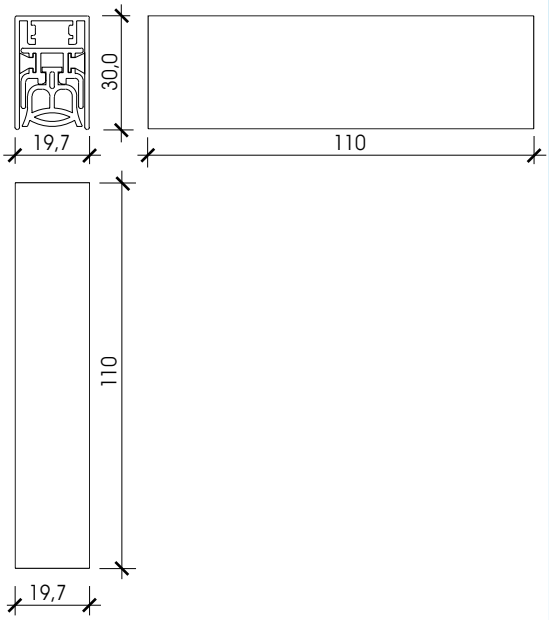	**471.01100** 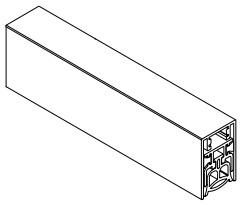

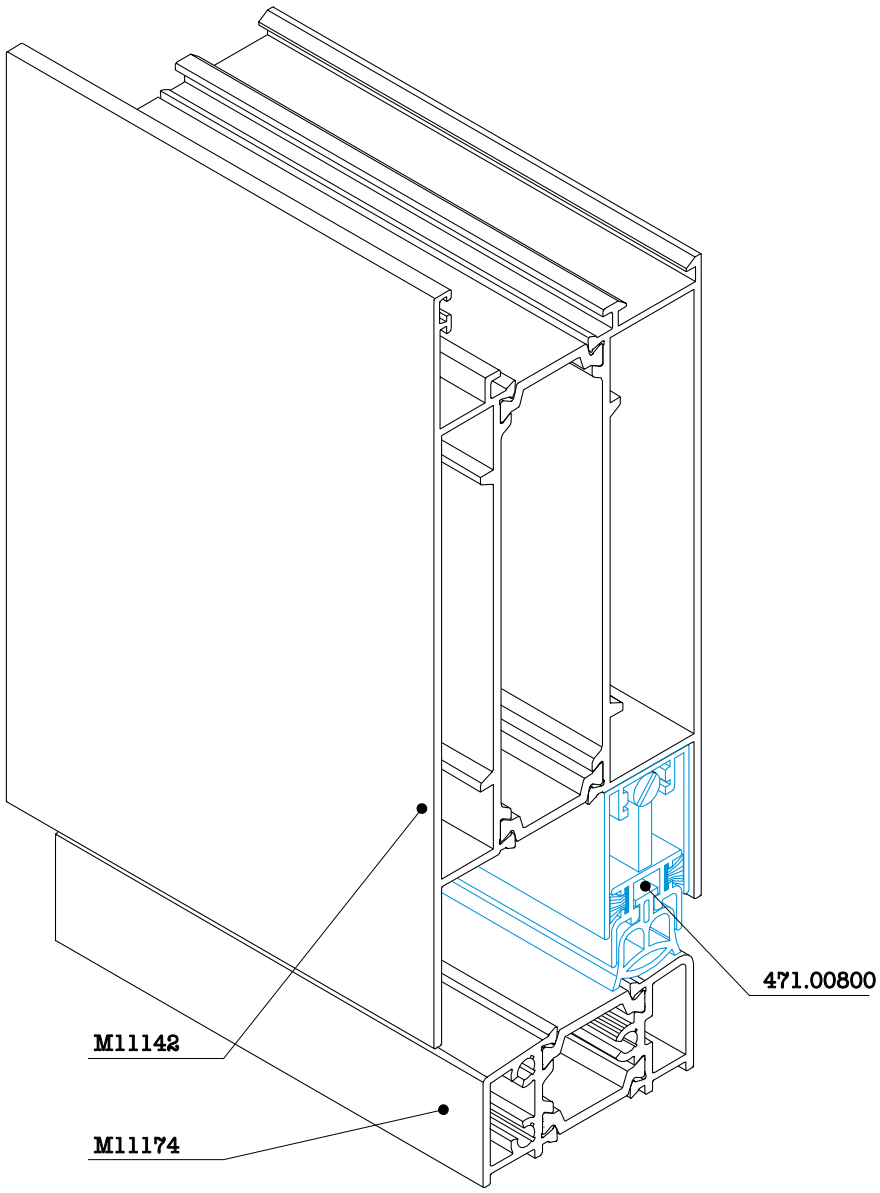

Glasing beads-displacement

LEGENT:

-glazing wedge for leveling

-glazing wedge for support

Fixed window

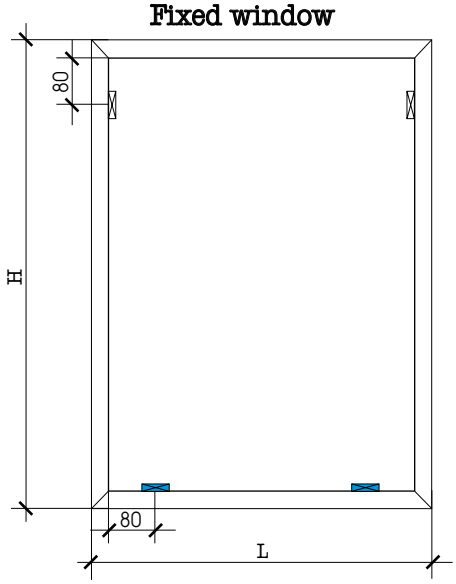

Turn window

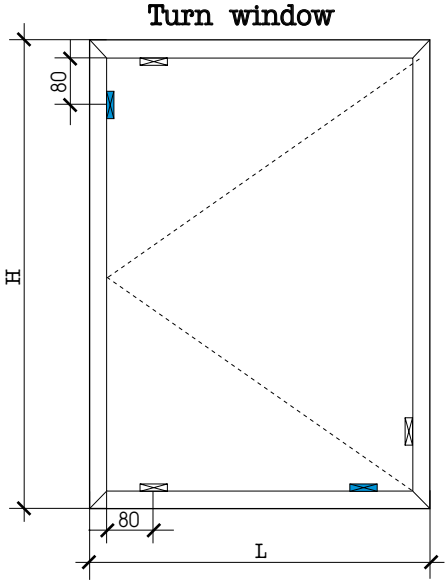

Door

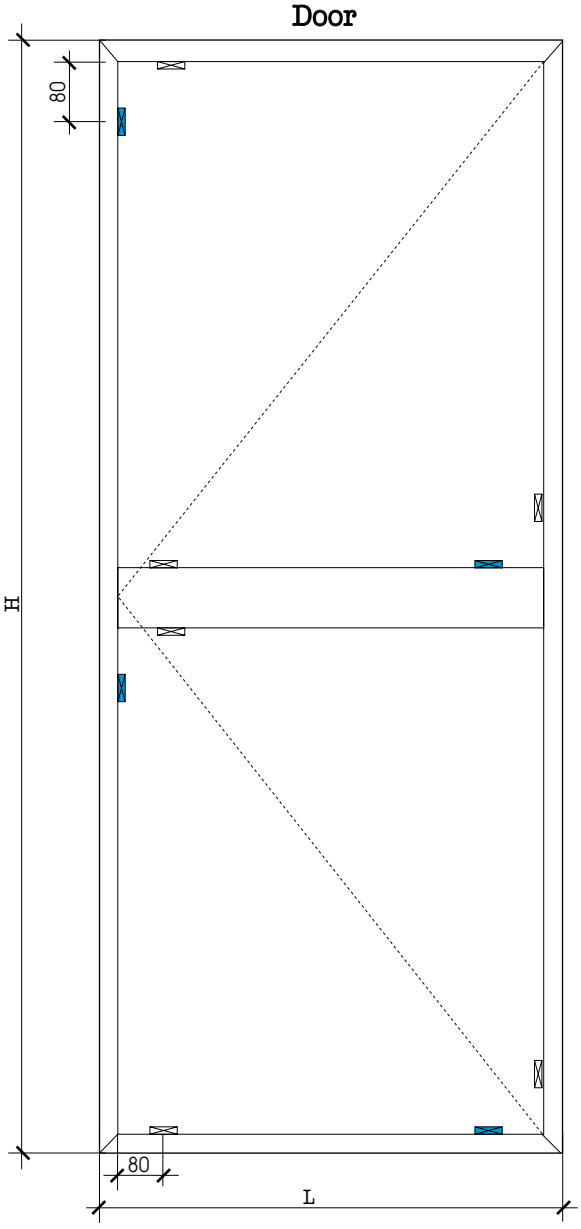

Tilt and turn window

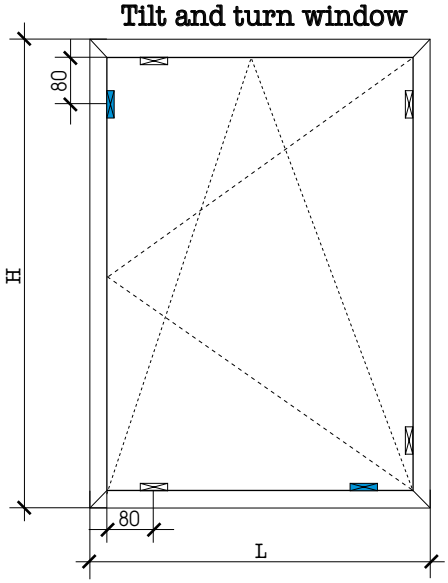

Tilt window

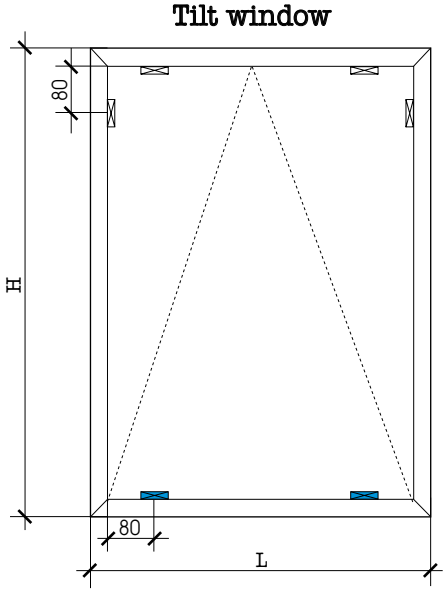

PLASTIC GLAZING SPACERS

Glazing spacers

Description		Application	Dimensions	Isometric view
Plastic glazing spacer 2mm **Material:** polyamide **Color:** black	**290.00002**	 **For :** All doors and windows	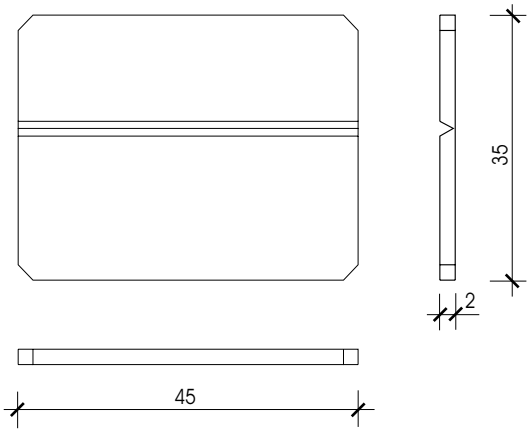	**290.00002** 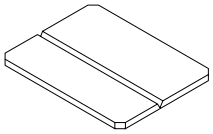
Plastic glazing spacer 3mm **Material:** polyamide **Color:** black	**290.00003**	 **For :** All doors and windows	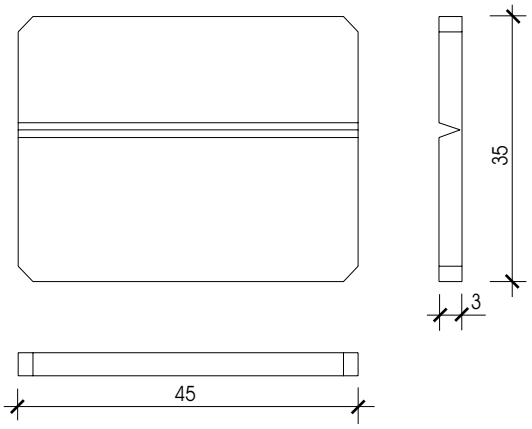	**290.00003** 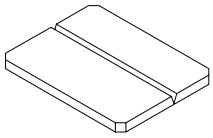
Plastic glazing spacer 4mm **Material:** polyamide **Color:** black	**290.00004**	 **For :** All doors and windows	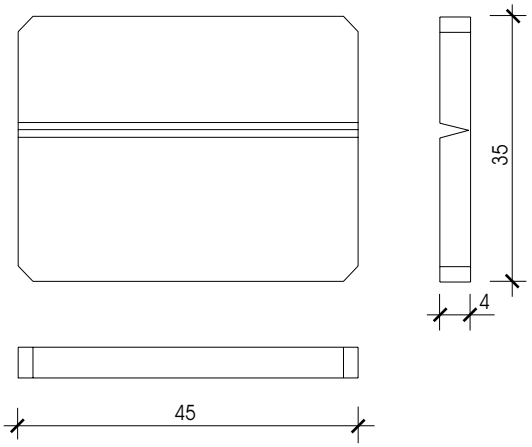	**290.00004** 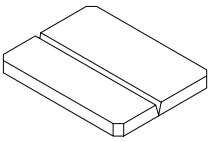
Plastic glazing spacer 5mm **Material:** polyamide **Color:** black	**290.00005**	 **For :** All doors and windows	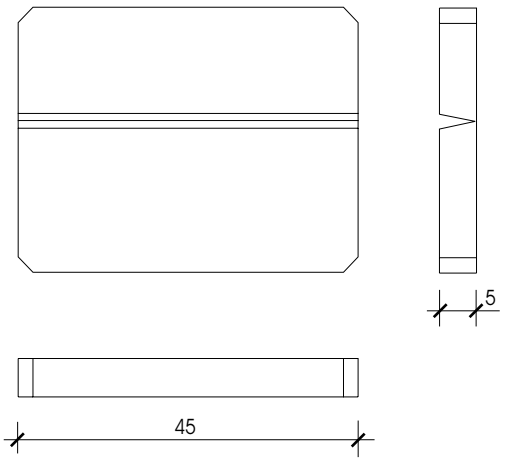	**290.00005** 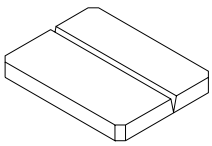

PLASTIC GLAZING SPACERS

Glazing spacers

Description		Application	Dimensions	Isometric view
Nickel plated profile cilinder 82mm **Material:** nickel **Color:** mill finished	**460.11051**	 **For :** All doors	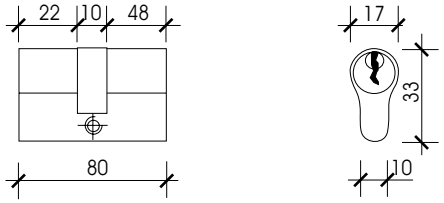	**460.11051**
Nickel plated profile cilinder 86mm **Material:** nickel **Color:** mill finished	**460.16000**	 **For :** All doors	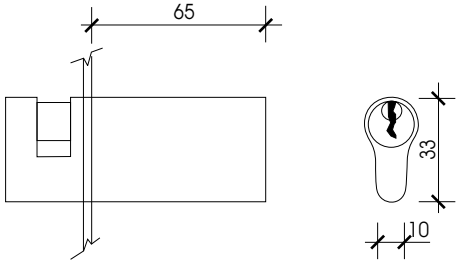	**460.16000**
Safety lock 35mm spring latch and dead bolt **Material:** nickel **Color:** mill finished	**440.76135**	 **For :** All doors	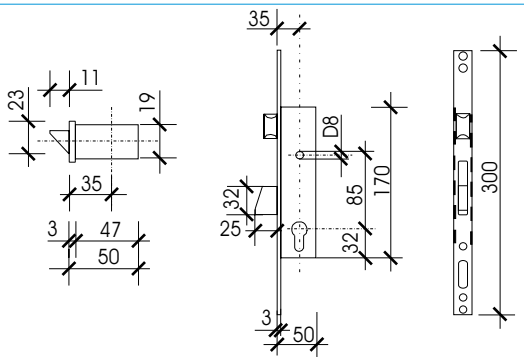	**440.76135**
Safety lock 35mm with adjustable roller **Material:** nickel **Color:** mill finished	**440.65135**	 **For :** All doors	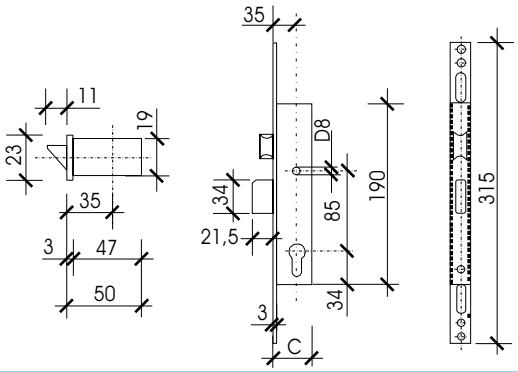	**440.65135**
Striking plate for electrical locker **Material:** nickel **Color:** chrome finish	**485.16219**	 **For :** All doors		**485.16219**

AIR GLOU GUN

ALUMINIUM SQUARES BONDING AGENT
(cartridge of 1,4 kg)

SILICONE GLAZING

SYSTEM 11000

"ALUTHERM PLUS"

DRAWINGS

Windows

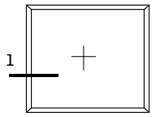

Page V/03,04,05

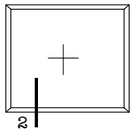

V/03,04,05,06

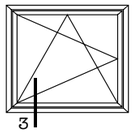

V/07,08,09,10
11,12,13,14

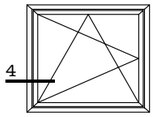

V/08,09,10,11,
12,13

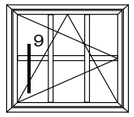

V/17

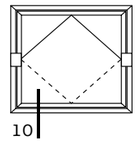

V/18

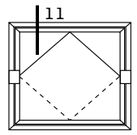

V/18

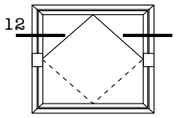

V/19

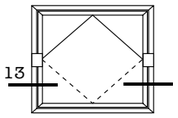

V/19

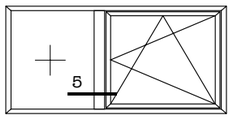

Page V/15

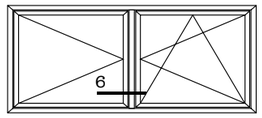

V/15,16

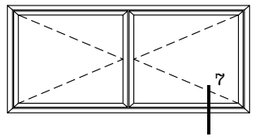

V/16

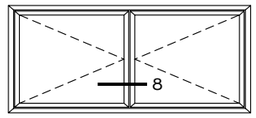

V/17

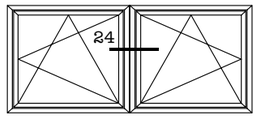

V/26

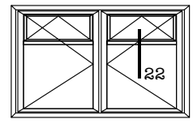

V/25

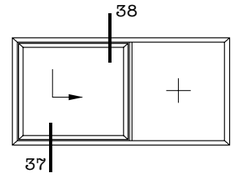

V/41

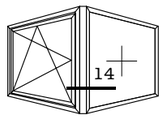

90°

Page V/20

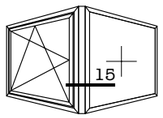

135°

V/21

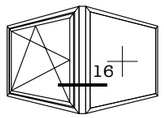

90°-160°

V/22,23

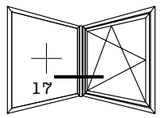

200°-270°

V/22,23

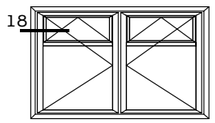

V/24

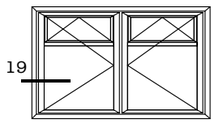

V/24

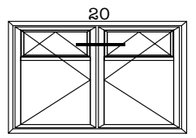

V/24

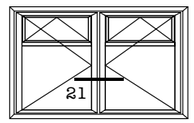

V/24

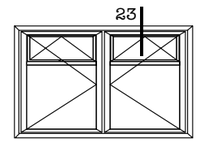

V/25

Doors

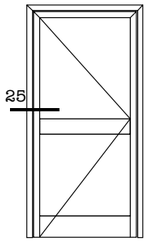

Page V/27,28

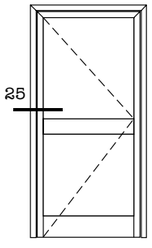

V/29

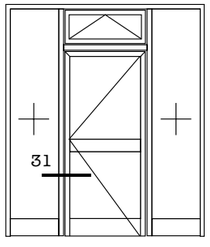

V/33

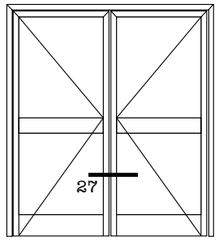

V/30,31

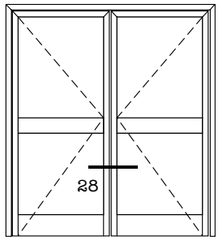

V/30,31

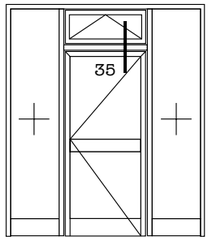

V/36,37

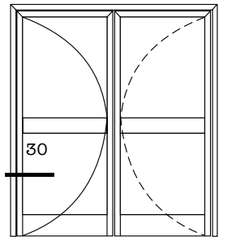

V/32

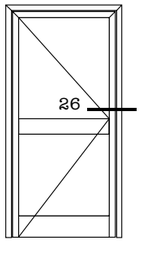

Page V/27,28

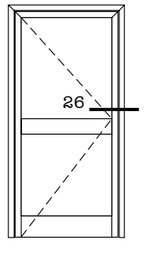

V/29

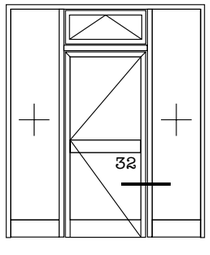

V/33,34

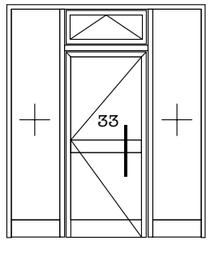

V/35

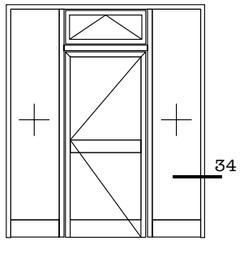

V/35

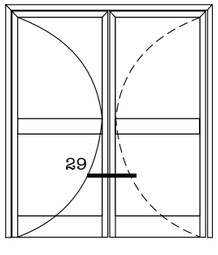

V/32

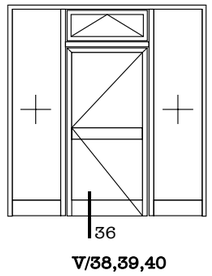

V/38,39,40

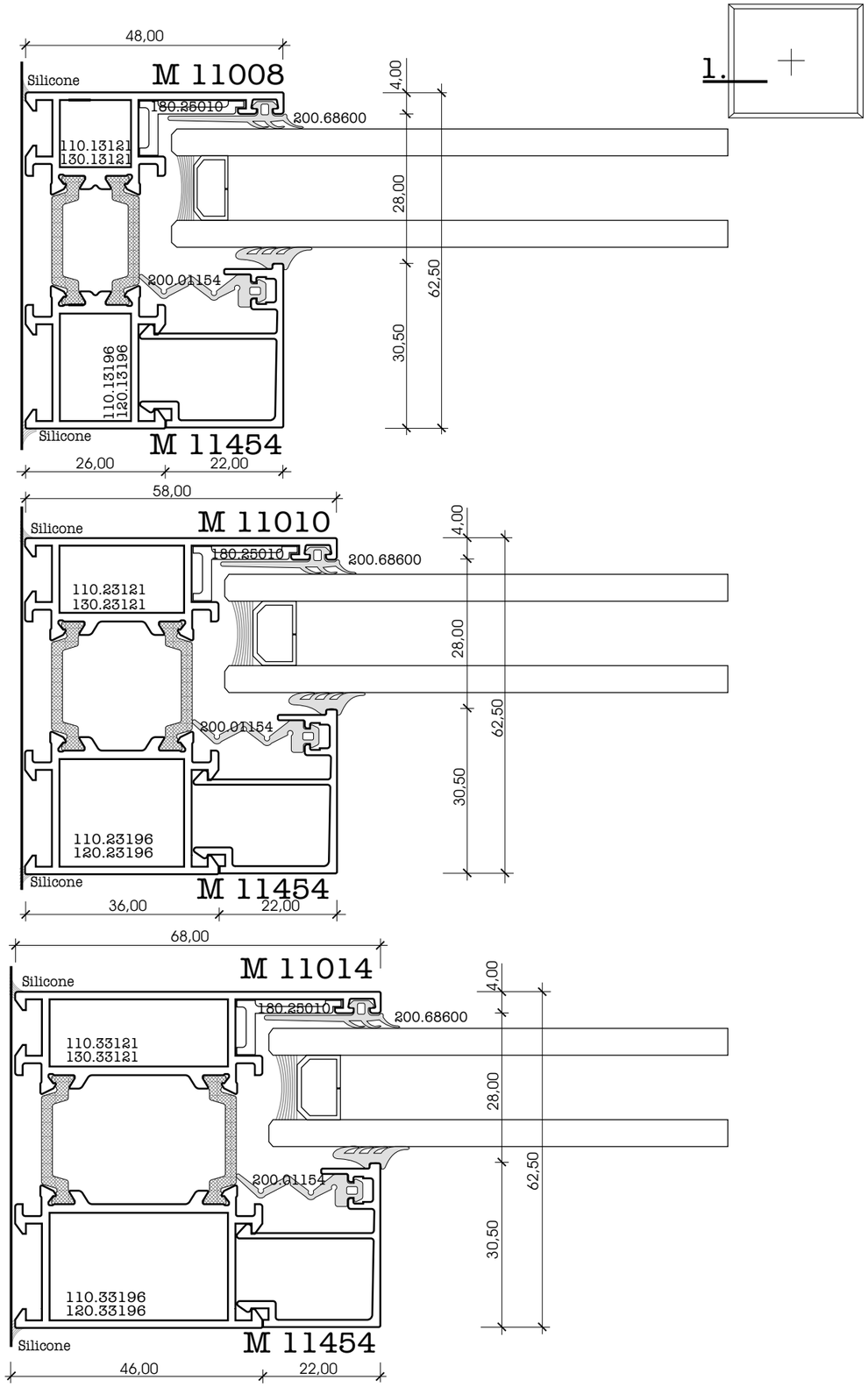
48,00
Silicone
M 11008
180.25010
200.68600
110.13121
130.13121
4,00
28,00
62,50
30,50
200.01154
110.13196
120.13196
Silicone
M 11454
26,00
22,00
58,00
M 11010
Silicone
180.25010
200.68600
110.23121
130.23121
4,00
28,00
62,50
30,50
200.01154
110.23196
120.23196
Silicone
M 11454
36,00
22,00
68,00
M 11014
Silicone
180.25010
200.68600
110.33121
130.33121
4,00
28,00
62,50
30,50
200.01154
110.33196
120.33196
Silicone
M 11454
46,00
22,00

1.

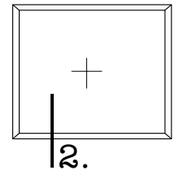
2.

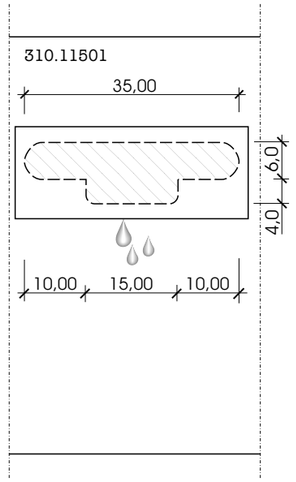
310.11501
35,00
6,0
4,0
10,00
15,00
10,00

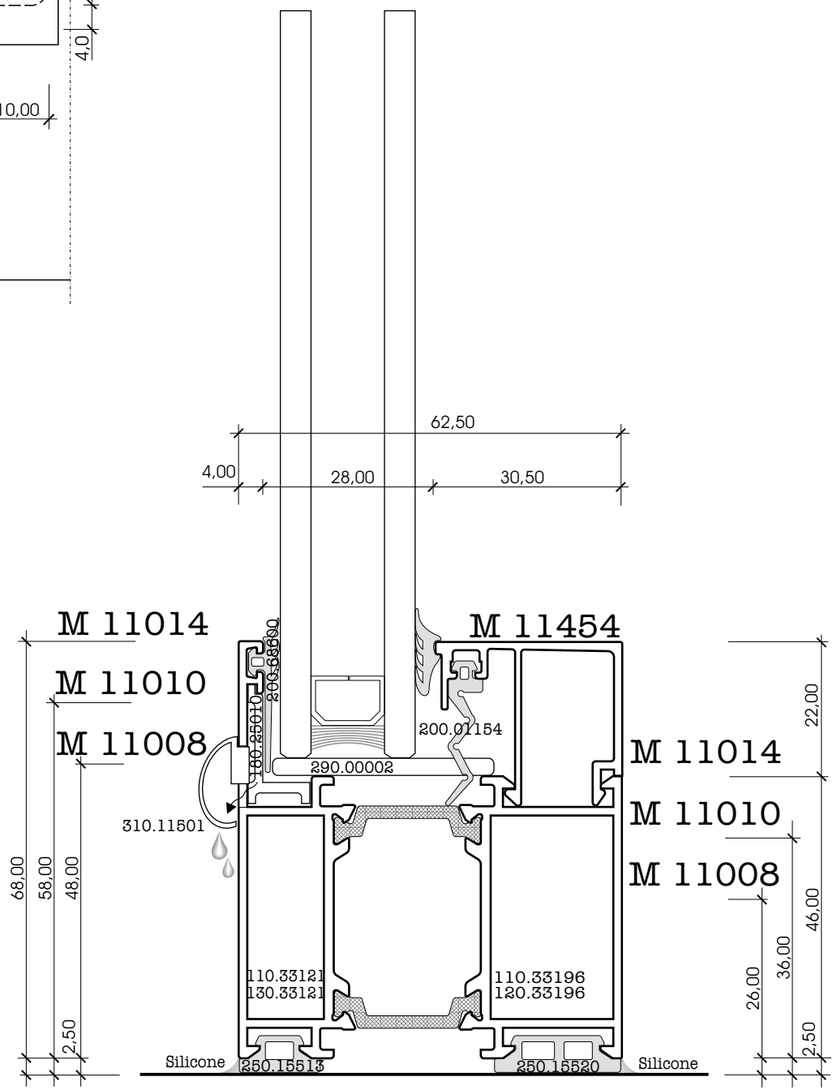
62,50
4,00
28,00
30,50
M 11014
M 11010
M 11008
M 11454
200.68600
180.25010
200.01154
290.00002
310.11501
68,00
58,00
48,00
2,50
110.33121
130.33121
110.33196
120.33196
Silicone
250.15513
250.15520
Silicone
22,00
M 11014
M 11010
M 11008
46,00
36,00
26,00
2,50

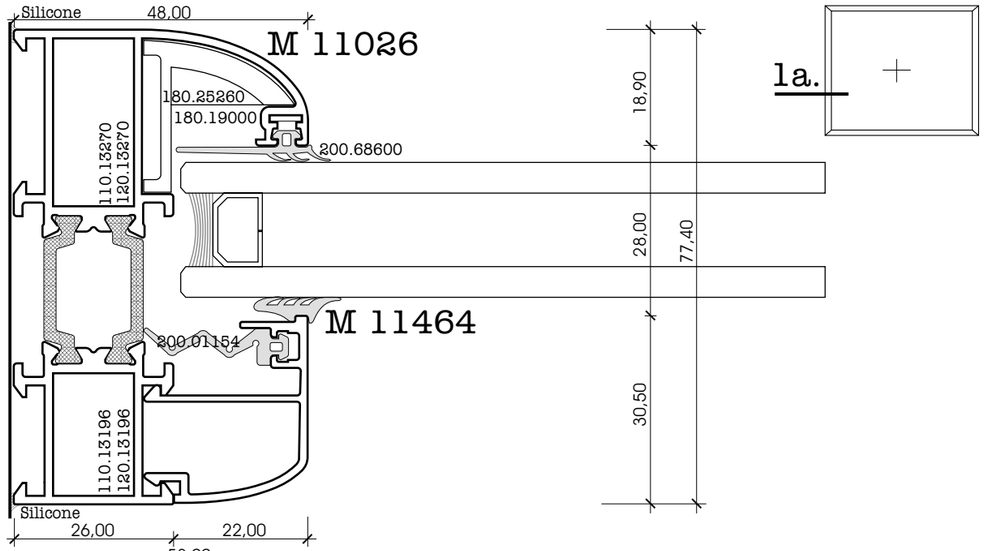
Silicone
48,00
M 11026
180.25260
180.19000
200.68600
110.13270
120.13270
18,90
28,00
77,40
M 11464
200.01154
30,50
110.13196
120.13196
Silicone
26,00
22,00

1a.

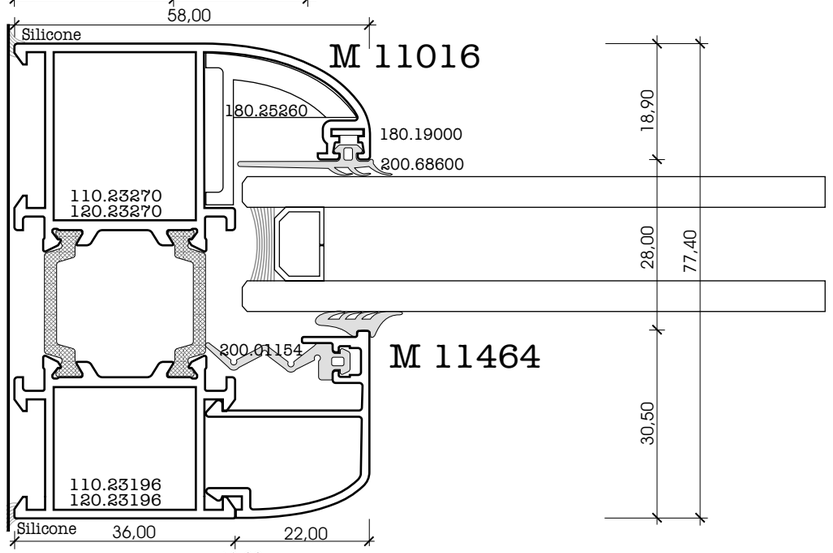
58,00
Silicone
M 11016
180.25260
180.19000
200.68600
110.23270
120.23270
18,90
28,00
77,40
200.01154
M 11464
30,50
110.23196
120.23196
Silicone
36,00
22,00

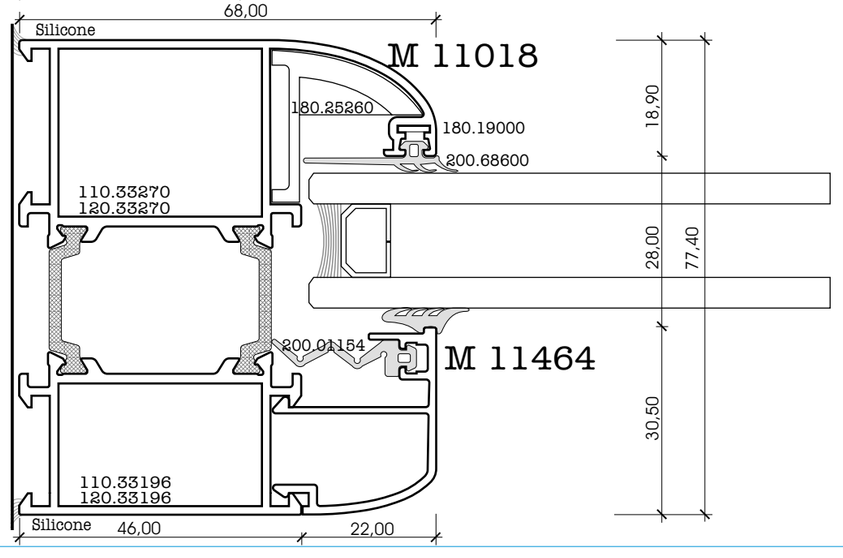
68,00
Silicone
M 11018
180.25260
180.19000
200.68600
110.33270
120.33270
18,90
28,00
77,40
200.01154
M 11464
30,50
110.33196
120.33196
Silicone
46,00
22,00

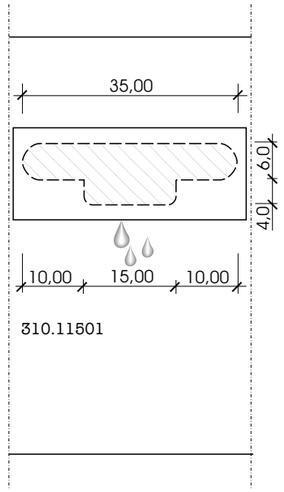
35,00
6,0
4,0
10,00
15,00
10,00
310.11501

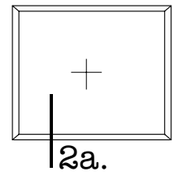
2a.

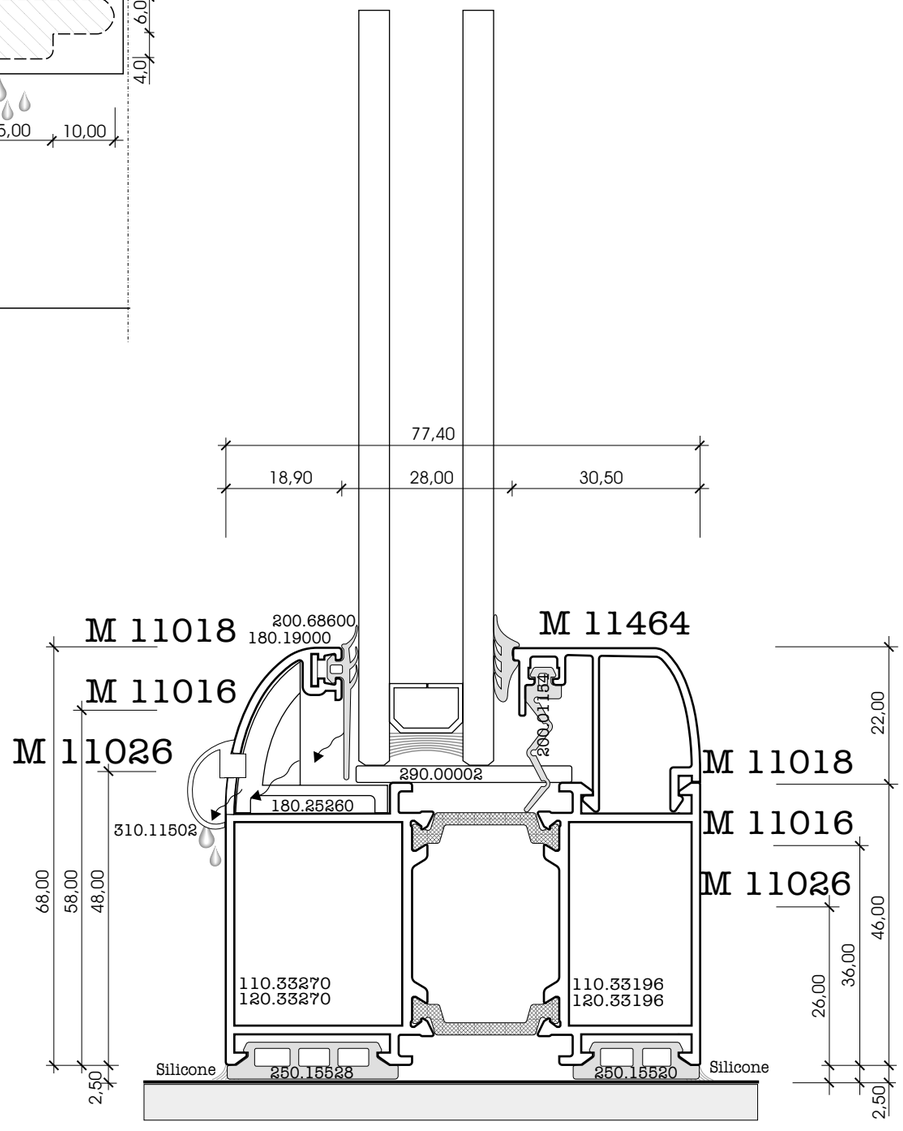
77,40
18,90
28,00
30,50
M 11018
M 11016
M 11026
200.68600
180.19000
M 11464
200.01154
290.00002
180.25260
310.11502
68,00
58,00
48,00
22,00
M 11018
M 11016
M 11026
46,00
36,00
26,00
110.33270
120.33270
110.33196
120.33196
Silicone
250.15528
250.15520
Silicone
2,50
2,50

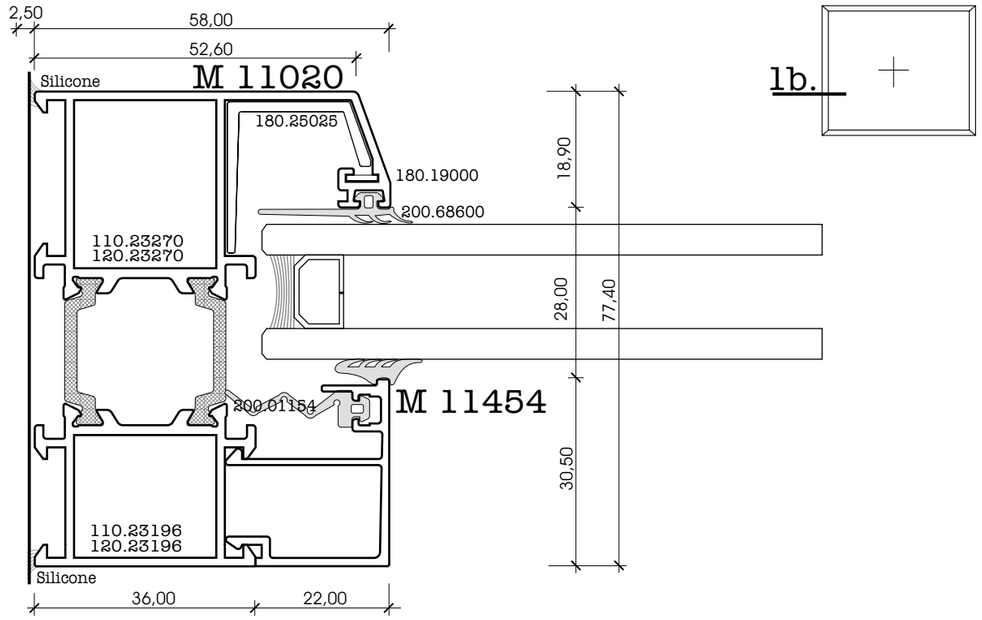
2,50
58,00
52,60
Silicone
M 11020
180.25025
180.19000
200.68600
110.23270
120.23270
18,90
28,00
77,40
30,50
200.01154
M 11454
110.23196
120.23196
Silicone
36,00
22,00

1b.

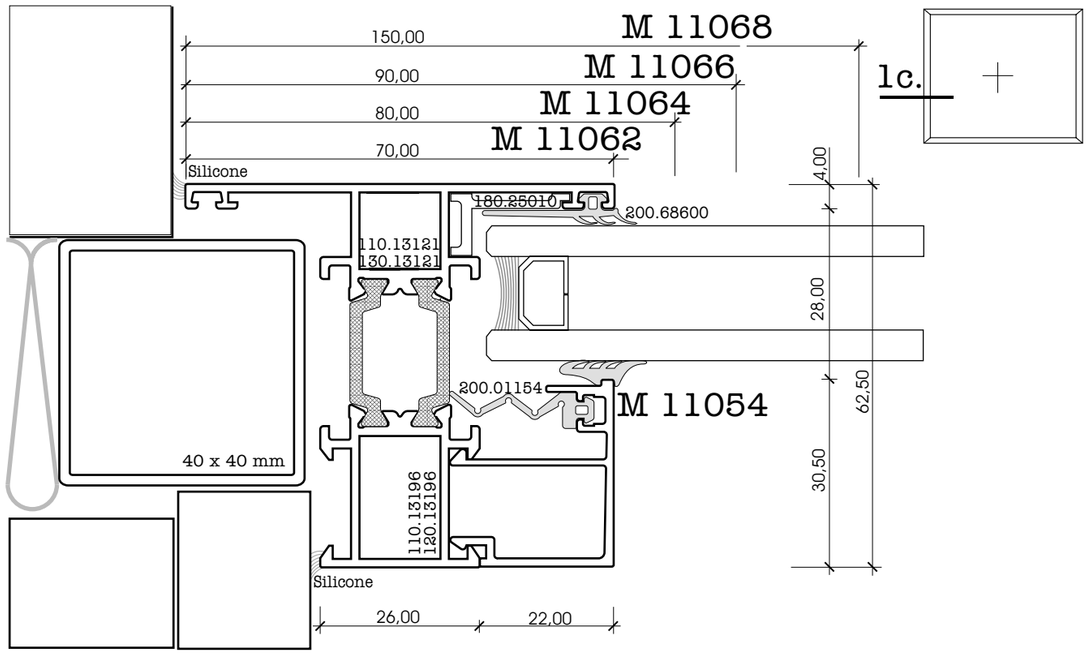
M 11068
150,00
M 11066
90,00
M 11064
80,00
M 11062
70,00
Silicone
180.25010
200.68600
4,00
110.13121
130.13121
28,00
62,50
200.01154
M 11054
40 x 40 mm
110.13196
120.13196
30,50
Silicone
26,00
22,00

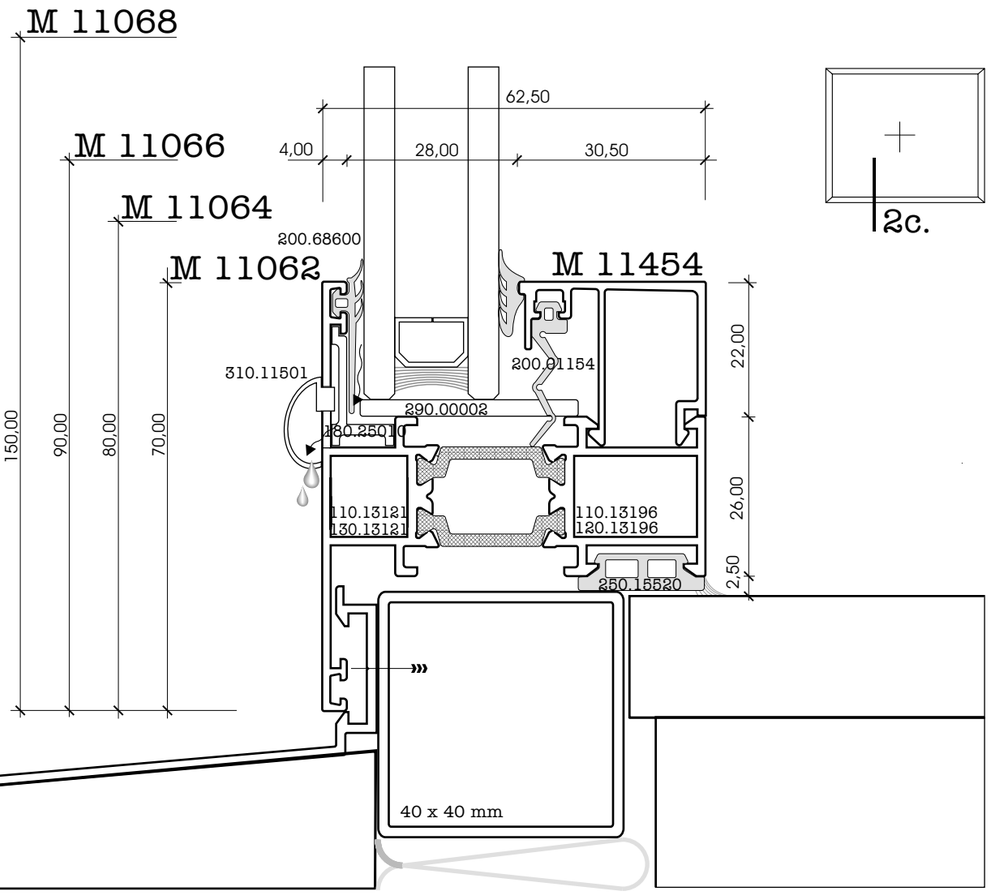
M 11068
62,50
M 11066
4,00
28,00
30,50
M 11064
200.68600
M 11062
M 11454
310.11501
200.01154
150,00
90,00
80,00
70,00
290.00002
180.25010
22,00
110.13121
130.13121
110.13196
120.13196
26,00
250.15520
2,50
40 x 40 mm

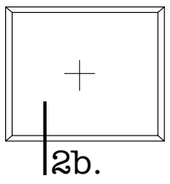
2b.

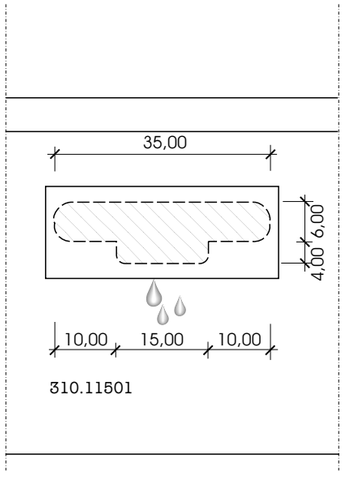
35,00
4,00
6,00
10,00
15,00
10,00
310.11501

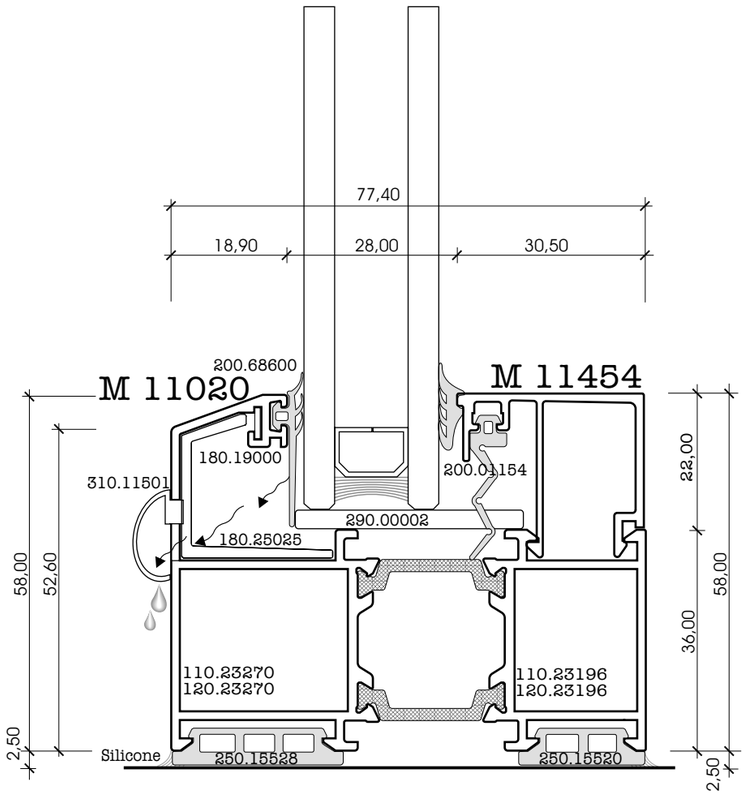
77,40
18,90
28,00
30,50
200.68600
M 11020
M 11454
180.19000
310.11501
200.01154
290.00002
180.25025
58,00
52,60
22,00
58,00
36,00
110.23270
120.23270
110.23196
120.23196
2,50
Silicone
250.15528
250.15520
2,50

2d.

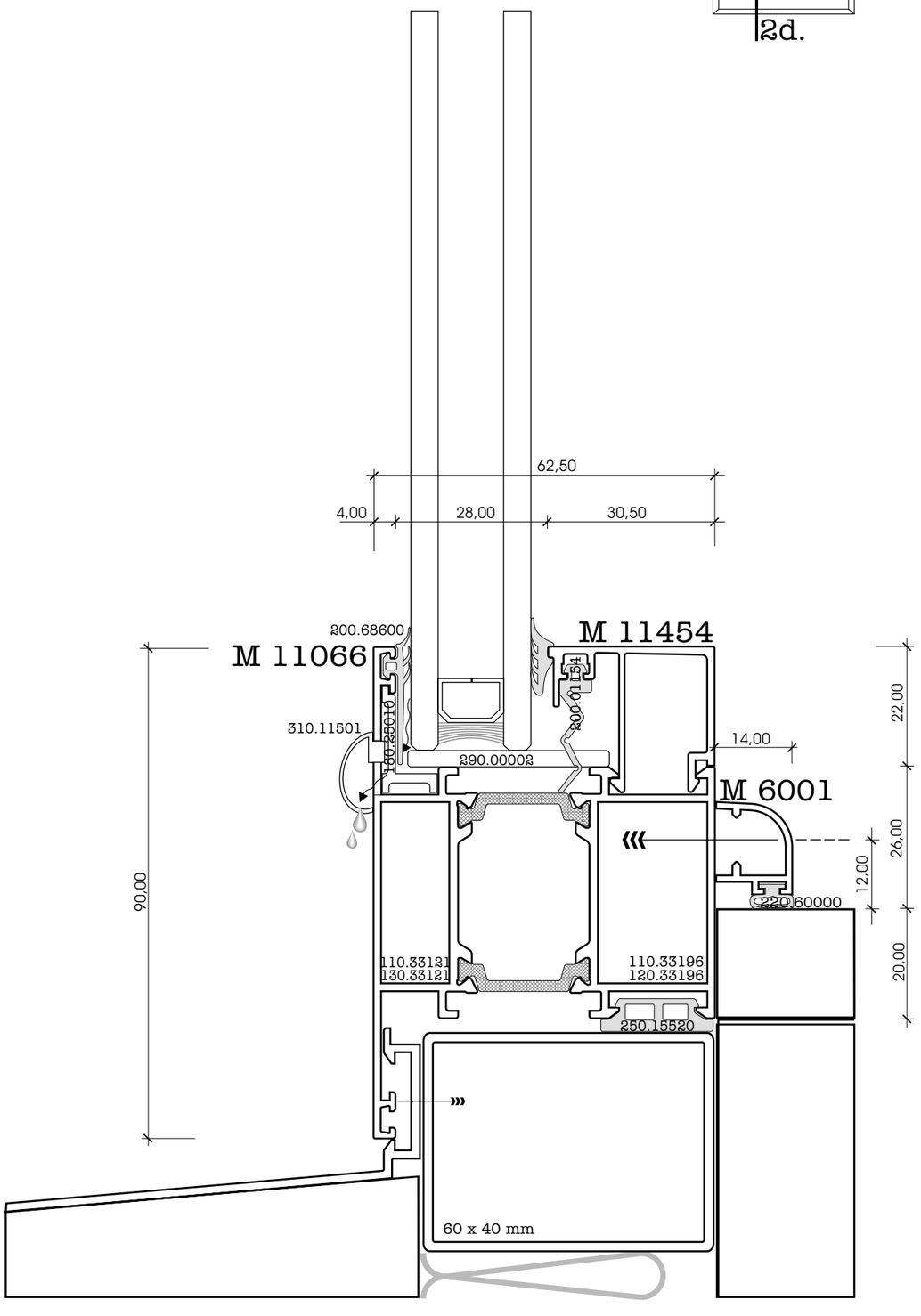
62,50
4,00
28,00
30,50
200.68600
M 11066
M 11454
310.11501
200.01154
290.00002
14,00
M 6001
22,00
26,00
12,00
220.60000
20,00
90,00
110.33121
130.33121
110.33196
120.33196
250.15520
60 x 40 mm

2e.

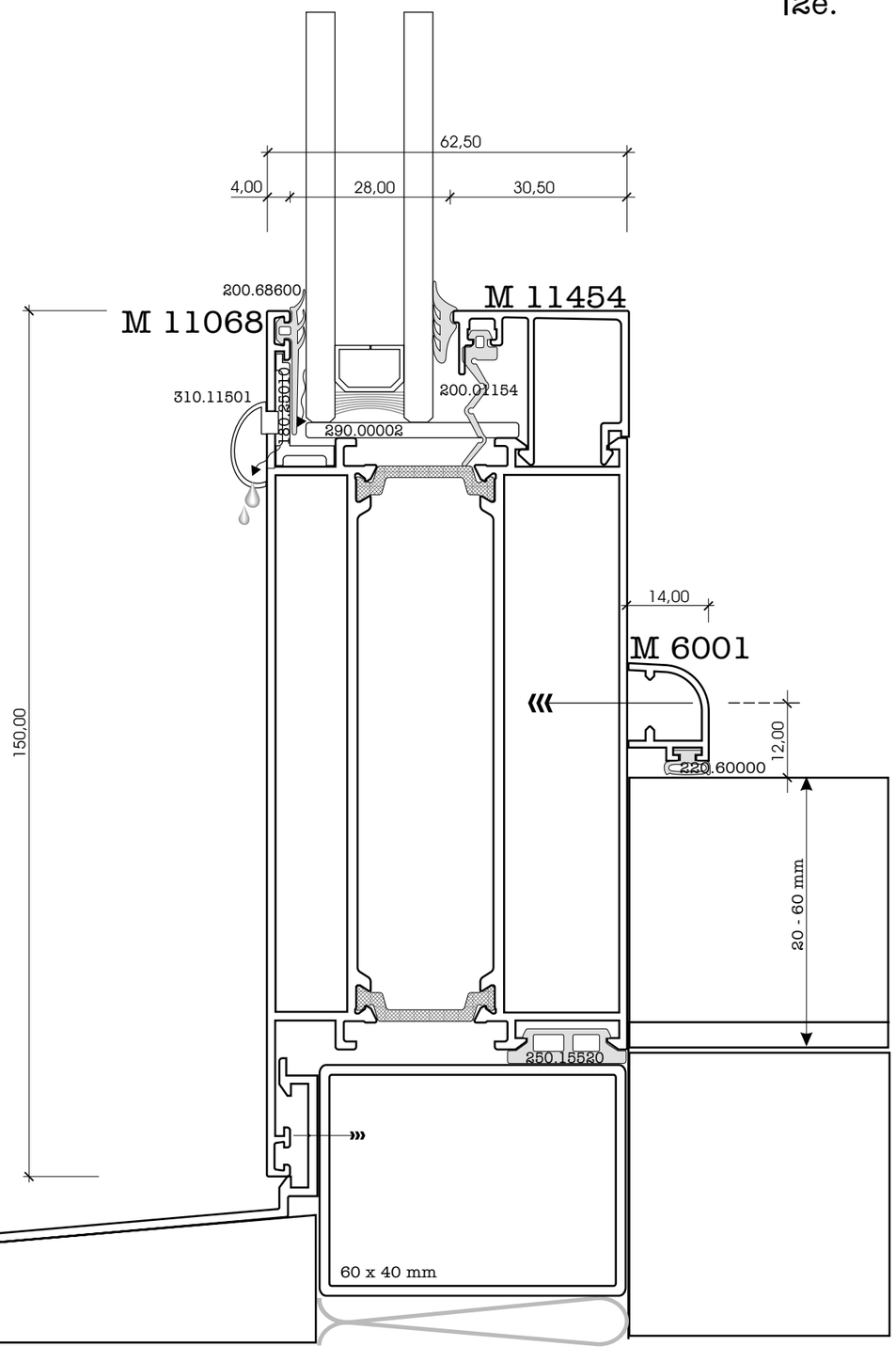
62,50
4,00
28,00
30,50
200.68600
M 11068
M 11454
310.11501
200.01154
290.00002
14,00
M 6001
150,00
12,00
220.60000
20 - 60 mm
250.15520
60 x 40 mm

3

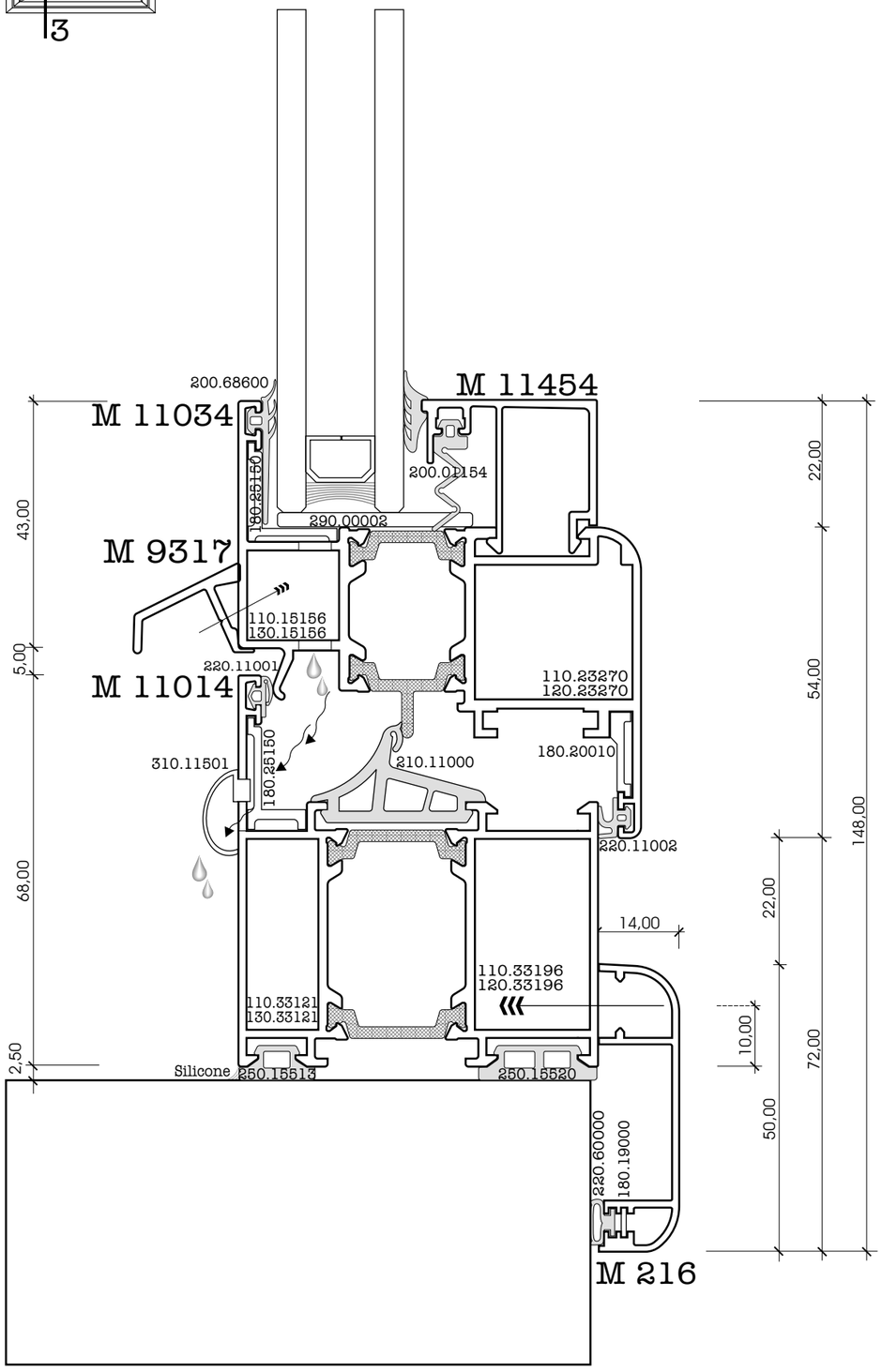
200.68600
M 11454
M 11034
200.01154
180.25150
290.00002
M 9317
110.15156
130.15156
220.11001
M 11014
110.23270
120.23270
180.20010
310.11501
180.25150
210.11000
220.11002
14,00
110.33196
120.33196
110.33121
130.33121
Silicone
250.15513
250.15520
220.60000
180.19000
M 216
43,00
5,00
68,00
2,50
22,00
54,00
148,00
22,00
72,00
10,00
50,00

3a.

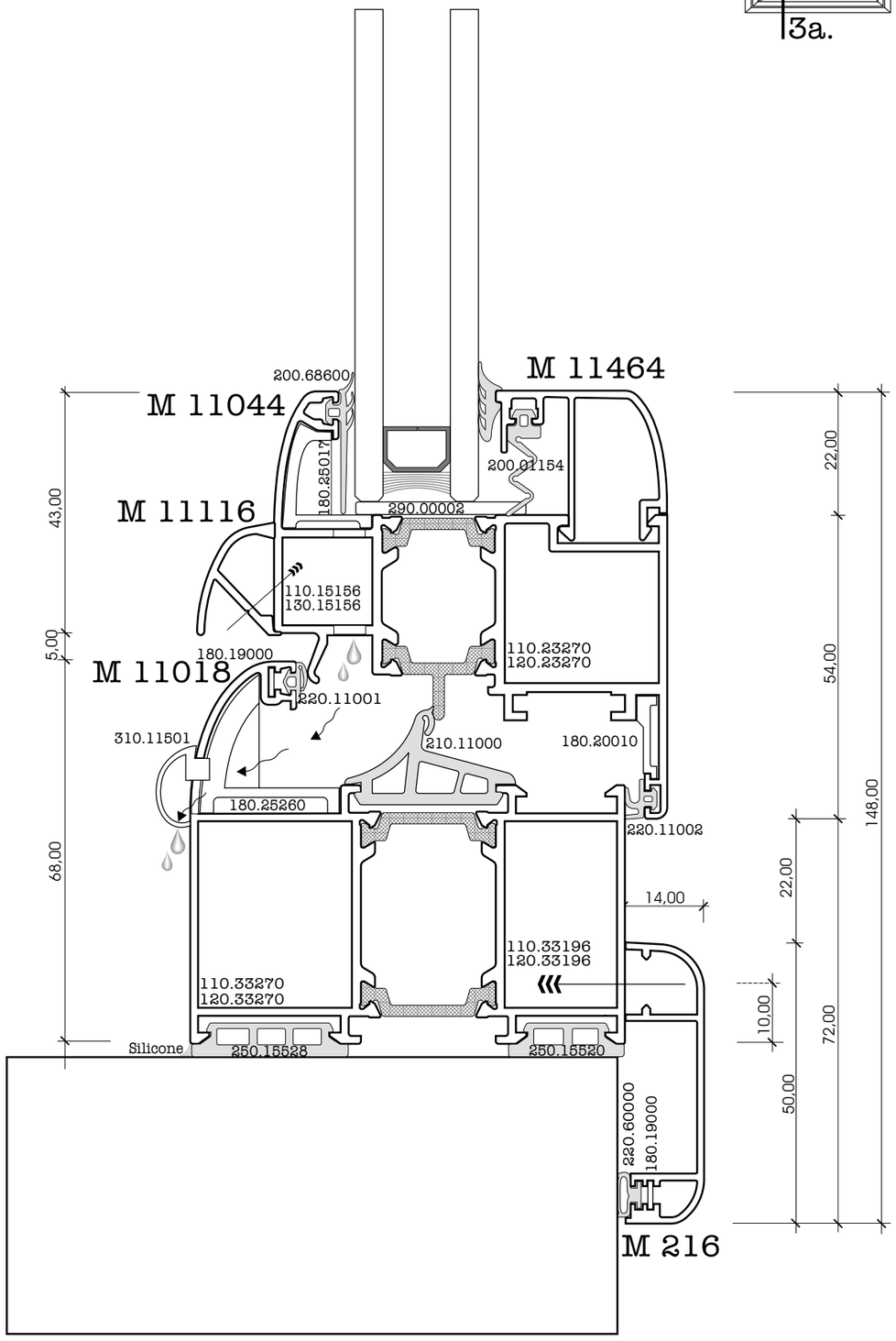
200.68600
M 11464
M 11044
200.01154
180.25017
290.00002
M 11116
110.15156
130.15156
180.19000
M 11018
110.23270
120.23270
220.11001
310.11501
210.11000
180.20010
180.25260
220.11002
14,00
110.33196
120.33196
110.33270
120.33270
Silicone
250.15528
250.15520
220.60000
180.19000
M 216
43,00
5,00
68,00
22,00
54,00
148,00
22,00
72,00
10,00
50,00

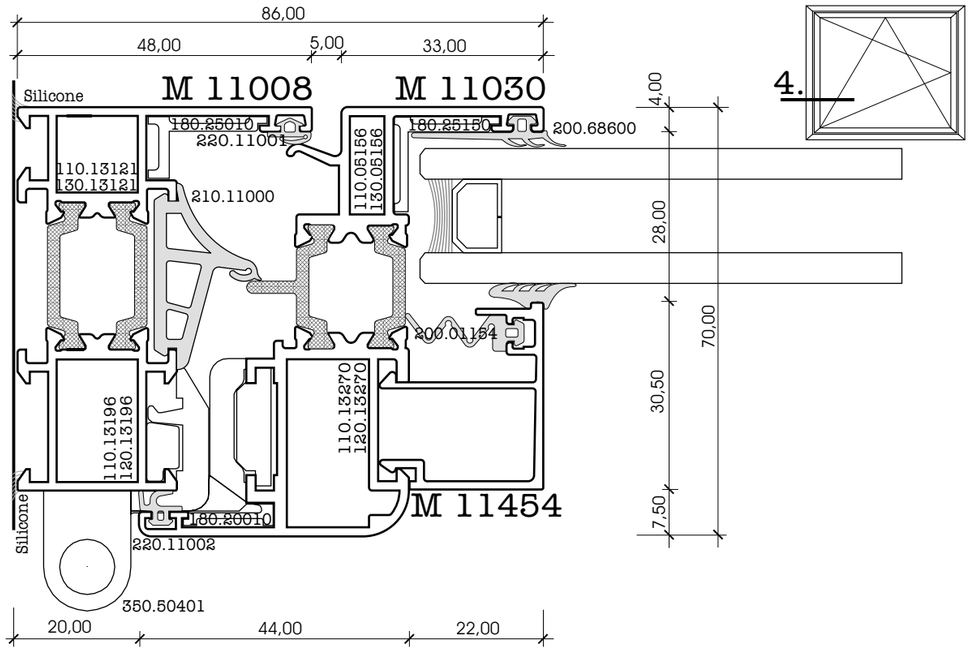
86,00
48,00
5,00
33,00
Silicone
M 11008
M 11030
180.25010
220.11001
180.25150
200.68600
110.13121
130.13121
210.11000
110.05156
130.05156
200.01154
110.13196
120.13196
110.13270
120.13270
M 11454
180.20010
220.11002
350.50401
4.00
28,00
30,50
70,00
7,50
20,00
44,00
22,00
4.

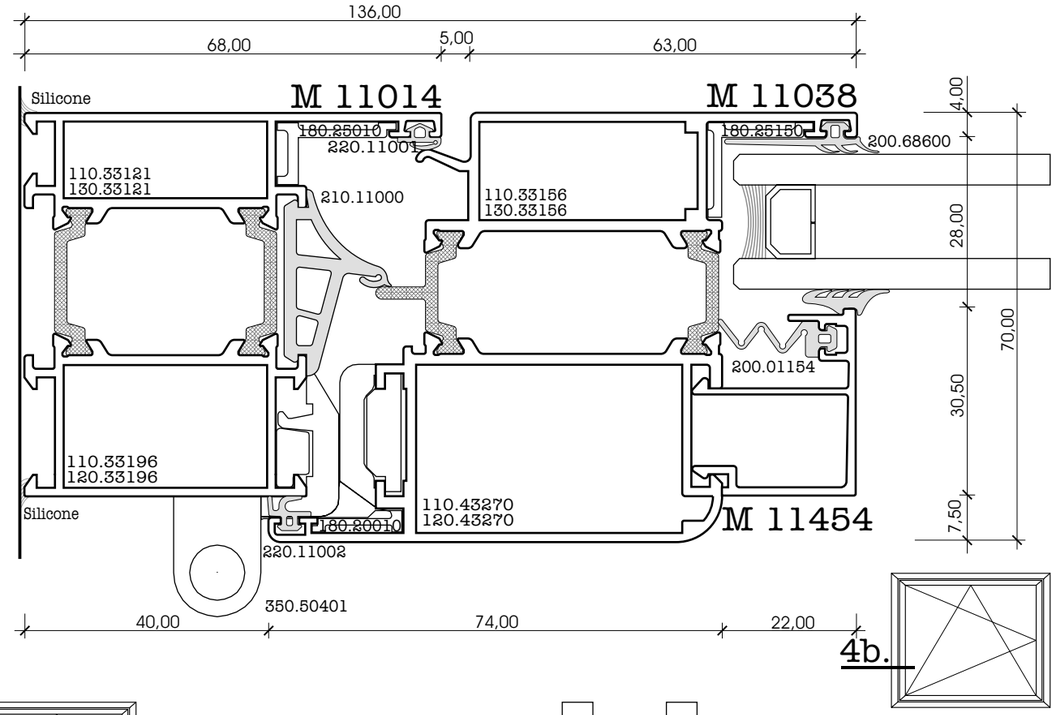
136,00
68,00
5,00
63,00
Silicone
M 11014
M 11038
180.25010
220.11001
180.25150
200.68600
110.33121
130.33121
210.11000
110.33156
130.33156
200.01154
110.33196
120.33196
110.43270
120.43270
M 11454
180.20010
220.11002
350.50401
4.00
28,00
30,50
70,00
7,50
40,00
74,00
22,00
4b.

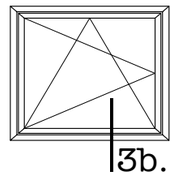
3b.

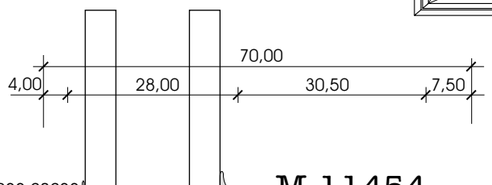
70,00
4,00
28,00
30,50
7,50

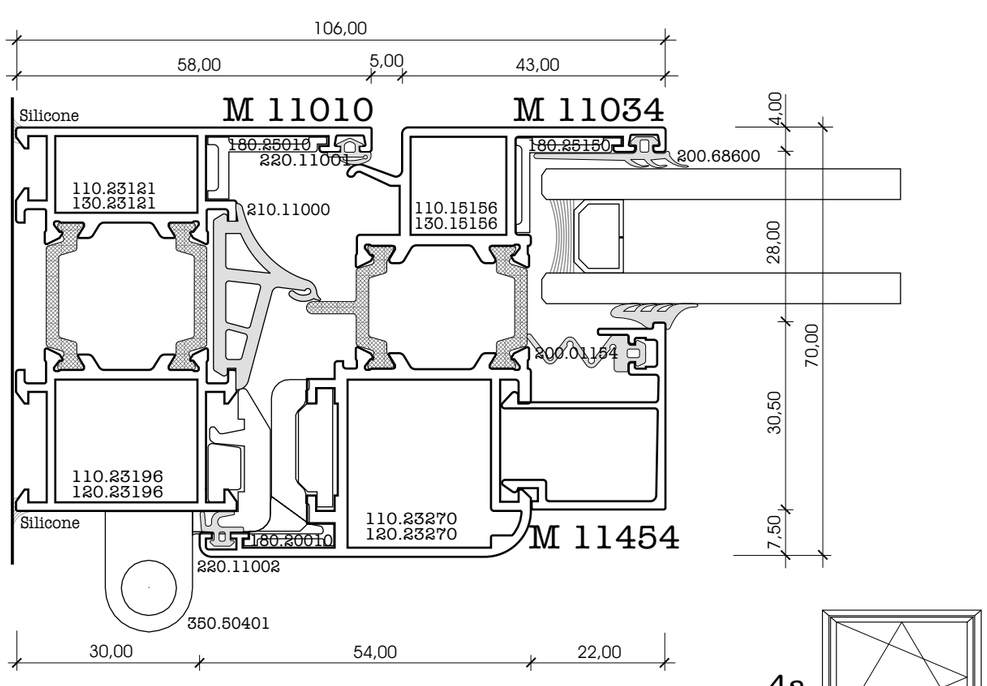
106,00
58,00
5,00
43,00
Silicone
M 11010
M 11034
180.25010
220.11001
180.25150
200.68600
110.23121
130.23121
210.11000
110.15156
130.15156
200.01154
110.23196
120.23196
110.23270
120.23270
M 11454
180.20010
220.11002
350.50401
4.00
28,00
30,50
70,00
7,50
30,00
54,00
22,00
4a.

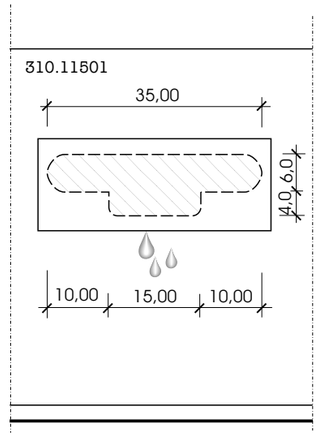
310.11501
35,00
4,0
6,0
10,00
15,00
10,00

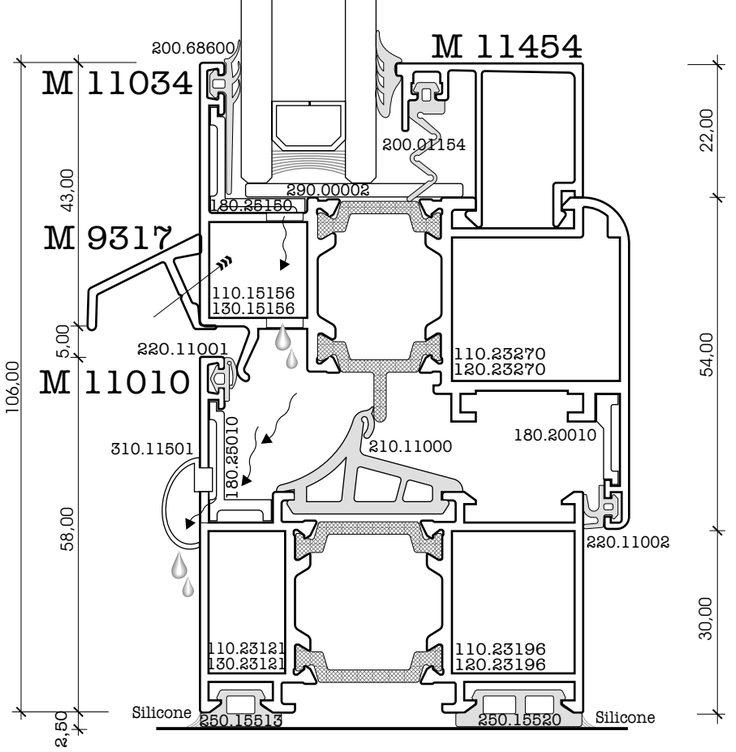
200.68600
M 11454
M 11034
200.01154
290.00002
180.25150
43,00
M 9317
110.15156
130.15156
5,00
220.11001
M 11010
110.23270
120.23270
310.11501
210.11000
180.25010
180.20010
220.11002
58,00
110.23121
130.23121
110.23196
120.23196
Silicone
250.15513
250.15520
Silicone
2,50
106,00
22,00
54,00
30,00

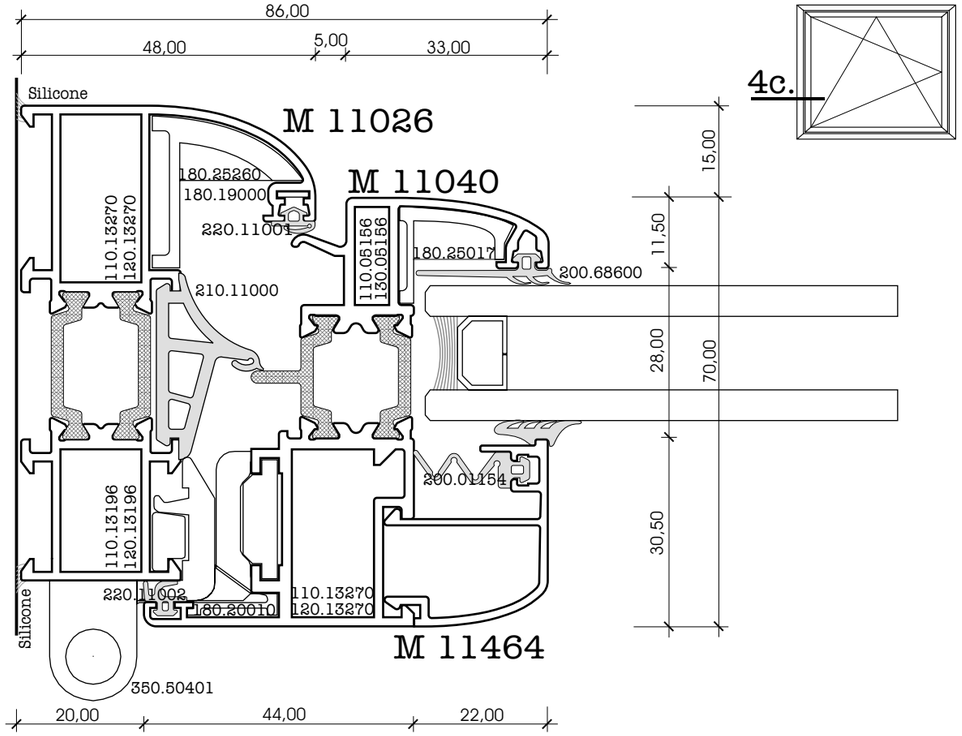
86,00
48,00
5,00
33,00
Silicone
M 11026
M 11040
180.25260
180.19000
220.11001
110.13270
120.13270
210.11000
110.05156
130.05156
180.25017
200.68600
15,00
11,50
28,00
70,00
30,50
200.01154
110.13196
120.13196
220.11002
180.20010
110.13270
120.13270
Silicone
M 11464
350.50401
20,00
44,00
22,00

4c.

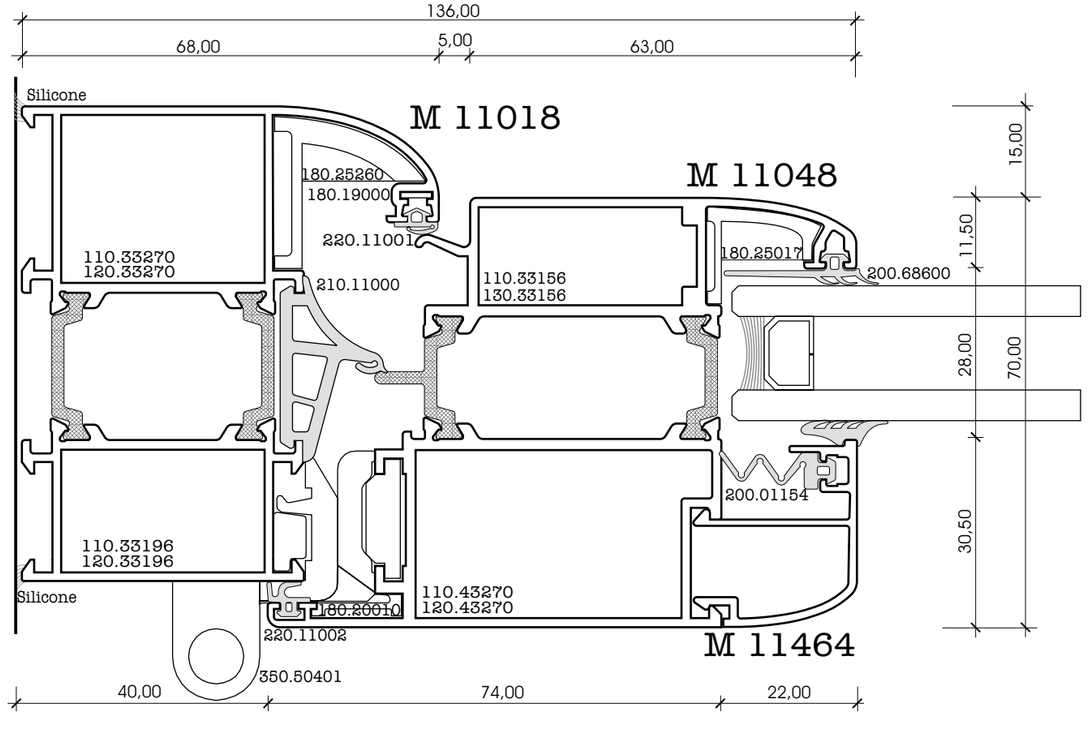
136,00
68,00
5,00
63,00
Silicone
M 11018
M 11048
180.25260
180.19000
220.11001
110.33270
120.33270
210.11000
110.33156
130.33156
180.25017
200.68600
15,00
11,50
28,00
70,00
30,50
200.01154
110.33196
120.33196
Silicone
220.11002
180.20010
110.43270
120.43270
M 11464
350.50401
40,00
74,00
22,00

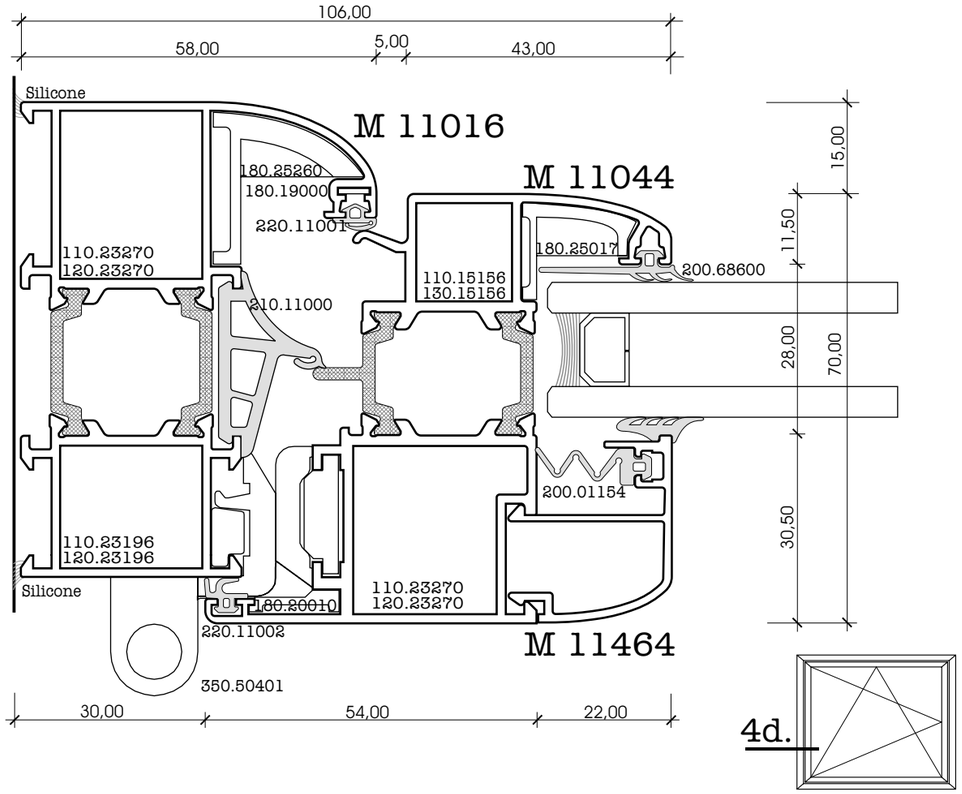
106,00
58,00
5,00
43,00
Silicone
M 11016
M 11044
180.25260
180.19000
220.11001
110.23270
120.23270
210.11000
110.15156
130.15156
180.25017
200.68600
15,00
11,50
28,00
70,00
30,50
200.01154
110.23196
120.23196
Silicone
180.20010
110.23270
120.23270
220.11002
M 11464
350.50401
30,00
54,00
22,00

4d.

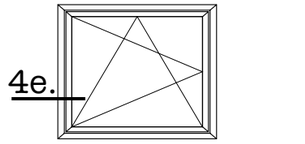
4e.

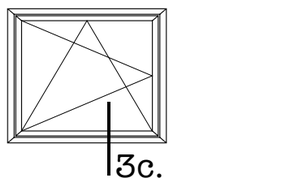
3c.

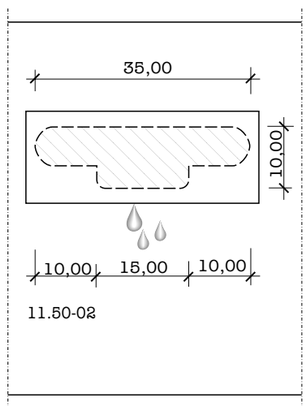
35,00
10,00
10,00
15,00
10,00
11.50-02

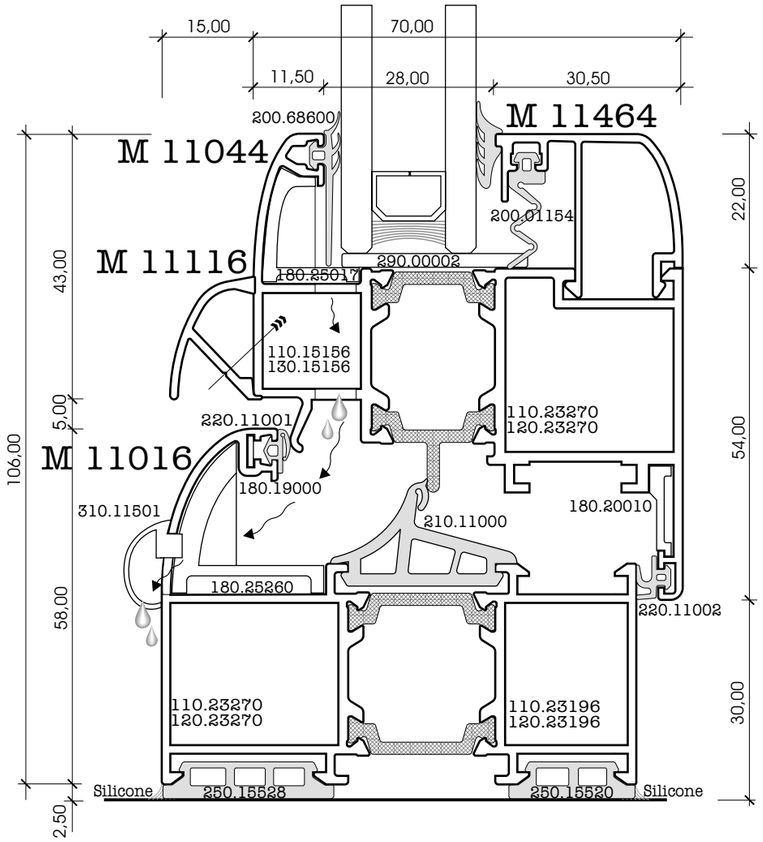
15,00
70,00
11,50
28,00
30,50
M 11464
M 11044
200.68600
200.01154
M 11116
290.00002
180.25017
110.15156
130.15156
220.11001
110.23270
120.23270
106,00
43,00
5,00
M 11016
180.19000
310.11501
210.11000
180.20010
180.25260
220.11002
58,00
54,00
30,00
110.23270
120.23270
110.23196
120.23196
Silicone
250.15528
250.15520
Silicone
2,50
22,00

4f.

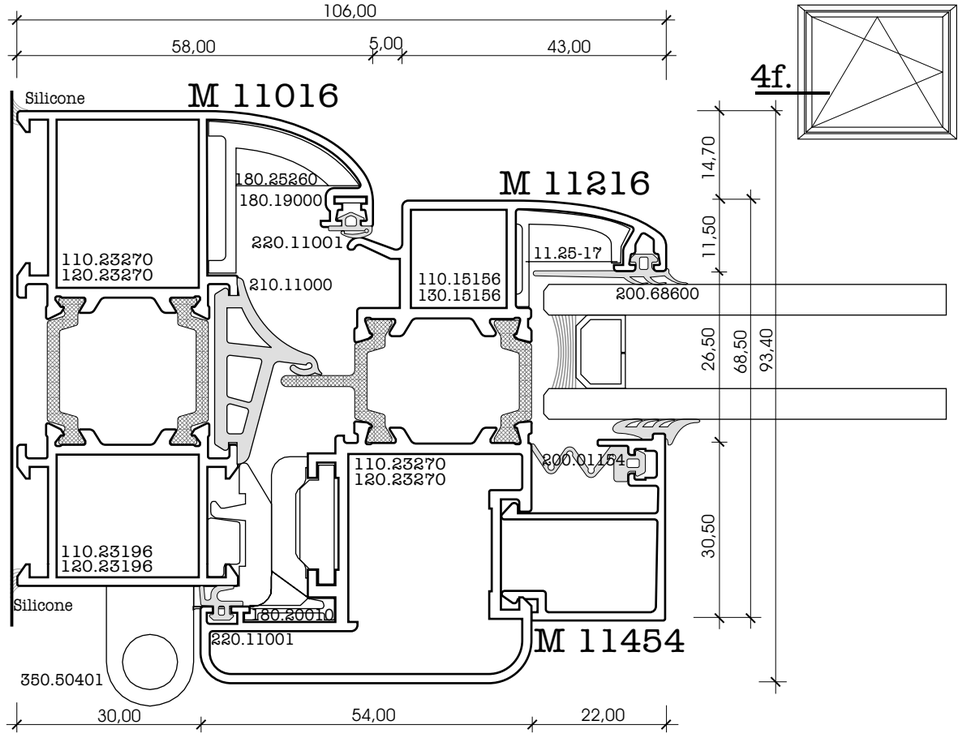
106,00
58,00
5,00
43,00
Silicone
M 11016
M 11216
180.25260
180.19000
220.11001
110.23270
120.23270
210.11000
110.15156
130.15156
11.25-17
200.68600
14,70
11,50
26,50
68,50
93,40
110.23270
120.23270
200.01154
30,50
110.23196
120.23196
Silicone
180.20010
220.11001
M 11454
350.50401
30,00
54,00
22,00

4g.

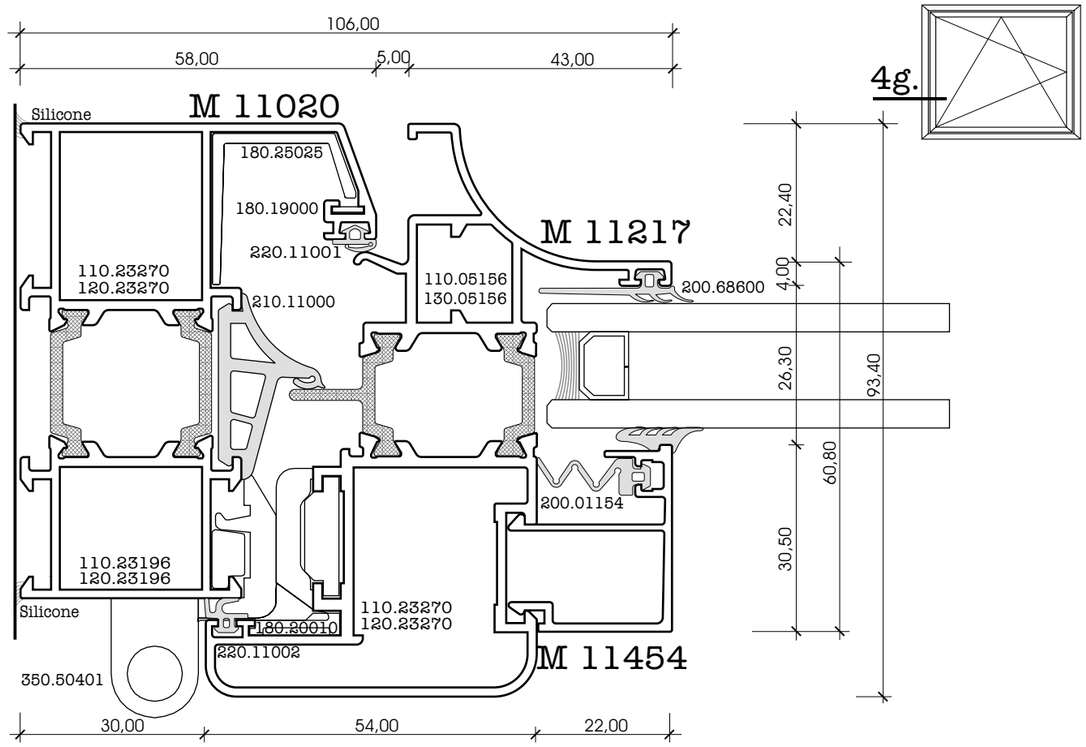
106,00
58,00
5,00
43,00
Silicone
M 11020
180.25025
180.19000
220.11001
M 11217
110.23270
120.23270
210.11000
110.05156
130.05156
200.68600
22,40
4,00
26,30
93,40
200.01154
60,80
30,50
110.23196
120.23196
Silicone
110.23270
120.23270
180.20010
220.11002
M 11454
350.50401
30,00
54,00
22,00

3d.

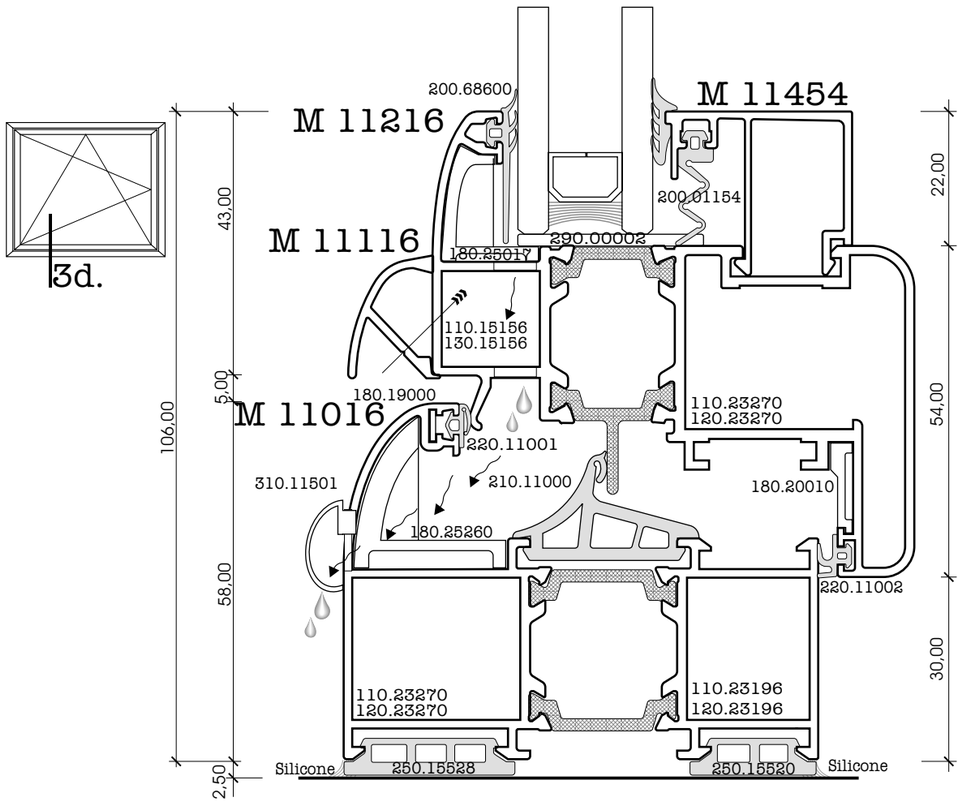
200.68600
M 11454
M 11216
200.01154
290.00002
180.25017
M 11116
110.15156
130.15156
180.19000
M 11016
220.11001
210.11000
310.11501
180.25260
180.20010
220.11002
110.23270
120.23270
110.23196
120.23196
Silicone
250.15528
250.15520
Silicone
106,00
43,00
5,00
58,00
2,50
22,00
54,00
30,00

3e.

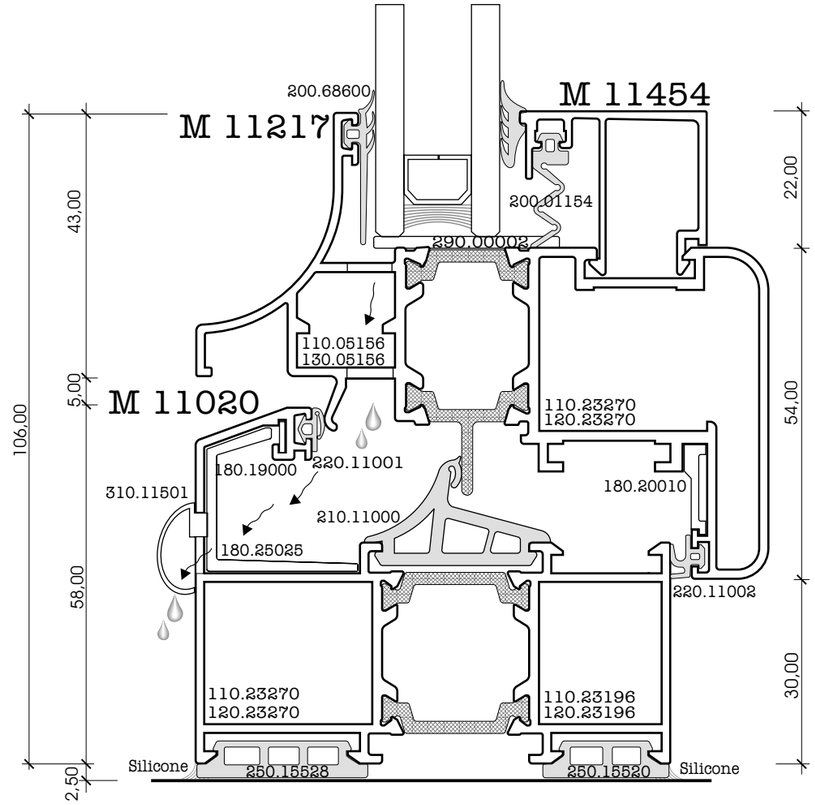
200.68600
M 11454
M 11217
200.01154
290.00002
110.05156
130.05156
M 11020
180.19000
220.11001
110.23270
120.23270
180.20010
310.11501
210.11000
180.25025
220.11002
110.23270
120.23270
110.23196
120.23196
Silicone
250.15528
250.15520
Silicone
106,00
43,00
5,00
58,00
2,50
22,00
54,00
30,00

4h.

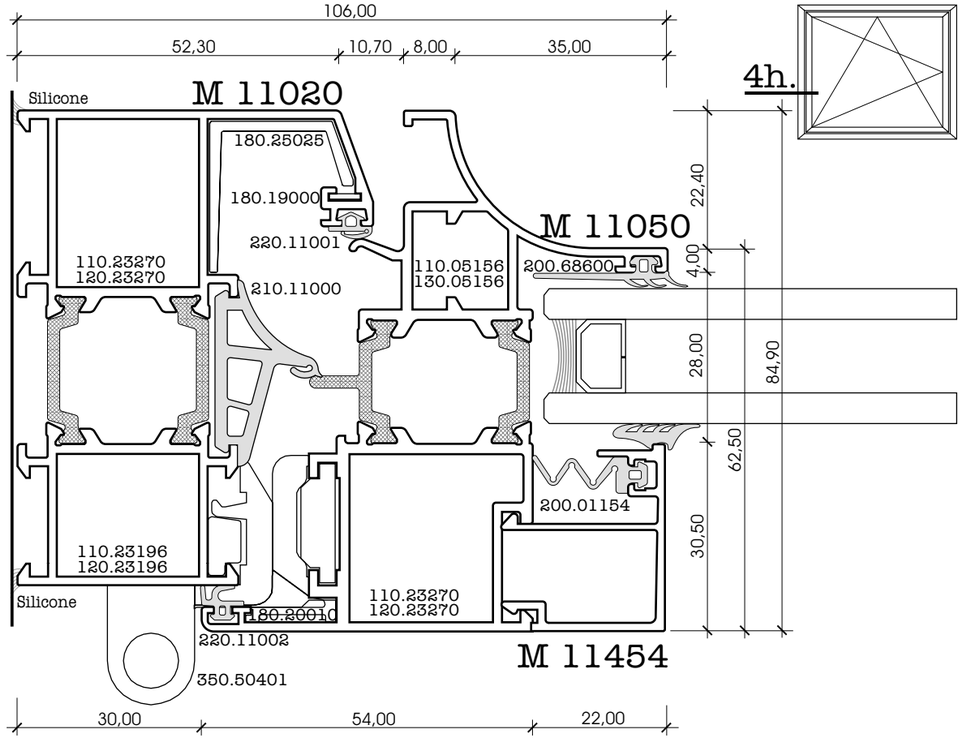
106,00
52,30
10,70
8,00
35,00
Silicone
M 11020
180.25025
180.19000
220.11001
110.23270
120.23270
210.11000
M 11050
110.05156
130.05156
200.68600
200.01154
110.23196
120.23196
Silicone
180.20010
220.11002
350.50401
110.23270
120.23270
M 11454
30,00
54,00
22,00
22,40
4,00
28,00
84,90
62,50
30,50

4i.

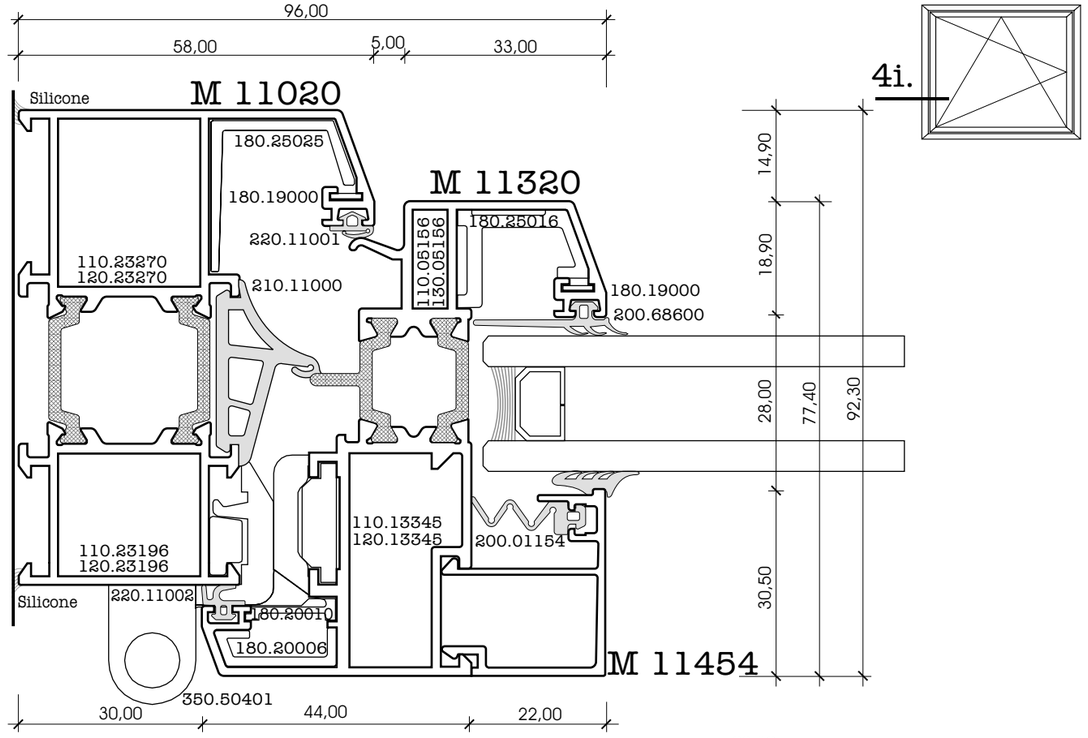
96,00
58,00
5,00
33,00
Silicone
M 11020
180.25025
180.19000
220.11001
110.23270
120.23270
210.11000
M 11320
110.05156
130.05156
180.25016
180.19000
200.68600
110.13345
120.13345
200.01154
110.23196
120.23196
Silicone
220.11002
180.20010
180.20006
350.50401
M 11454
30,00
44,00
22,00
14,90
18,90
28,00
77,40
92,30
30,50

3f.

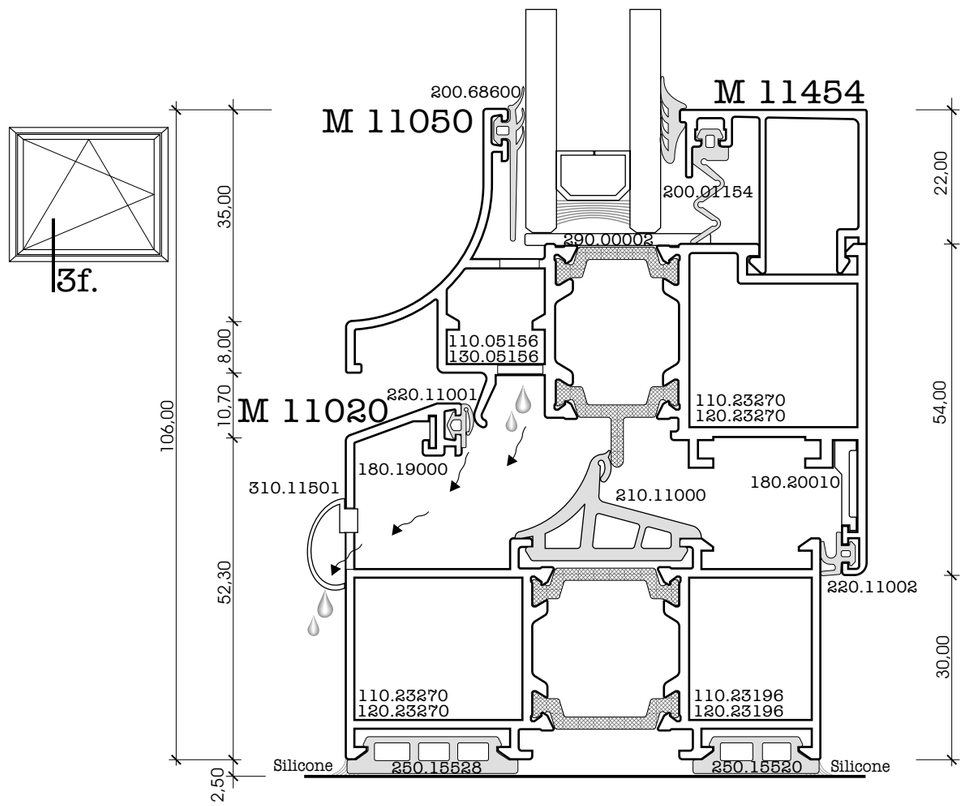
106,00
35,00
8,00
10,70
52,30
2,50
200.68600
M 11050
M 11454
200.01154
290.00002
110.05156
130.05156
M 11020
220.11001
180.19000
310.11501
210.11000
180.20010
220.11002
110.23270
120.23270
110.23196
120.23196
Silicone
250.15528
250.15520
Silicone
22,00
54,00
30,00

3g.

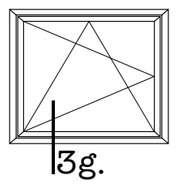

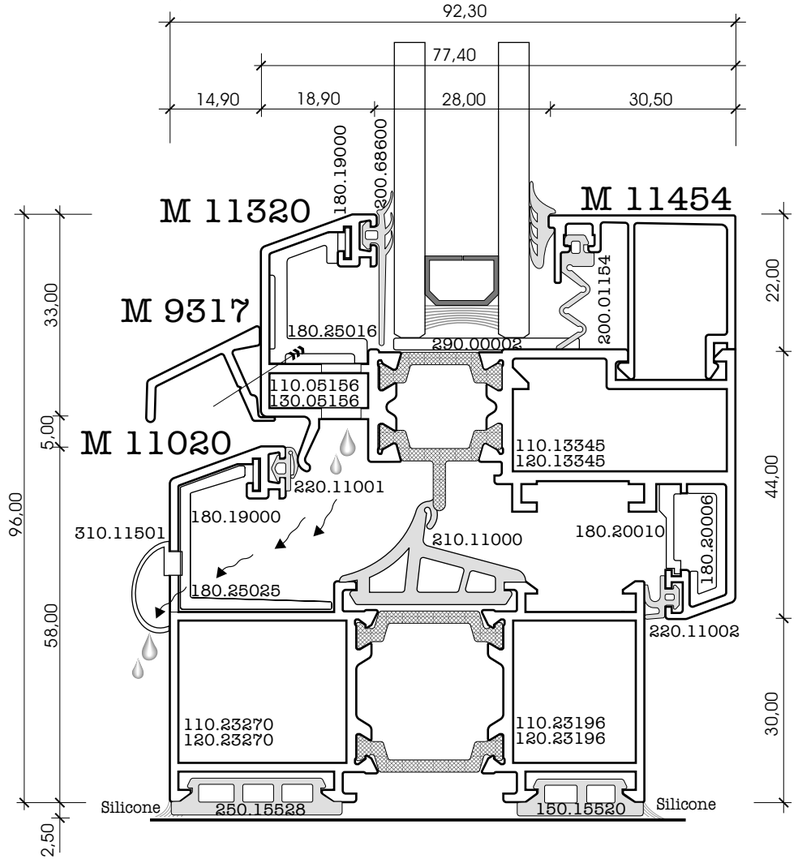
92,30
77,40
14,90
18,90
28,00
30,50
180.19000
200.68600
M 11320
M 11454
200.01154
M 9317
180.25016
290.00002
110.05156
130.05156
M 11020
110.13345
120.13345
220.11001
180.19000
310.11501
210.11000
180.20010
180.20006
180.25025
220.11002
110.23270
120.23270
110.23196
120.23196
Silicone
250.15528
150.15520
Silicone
96,00
33,00
5,00
58,00
2,50
22,00
44,00
30,00

4j.

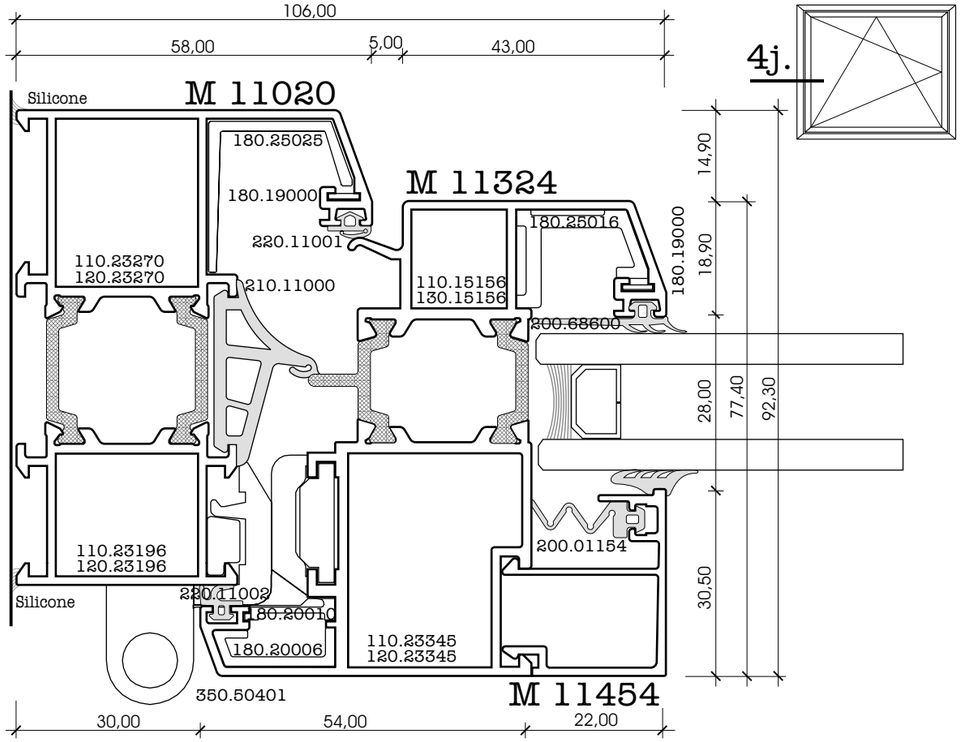
106,00
58,00
5,00
43,00
M 11020
Silicone
180.25025
180.19000
M 11324
220.11001
180.25016
110.23270
120.23270
210.11000
110.15156
130.15156
180.19000
300.68600
14,90
18,90
28,00
77,40
92,30
110.23196
120.23196
200.01154
30,50
Silicone
280.11002
180.20010
180.20006
110.23345
120.23345
350.50401
M 11454
30,00
54,00
22,00

4k

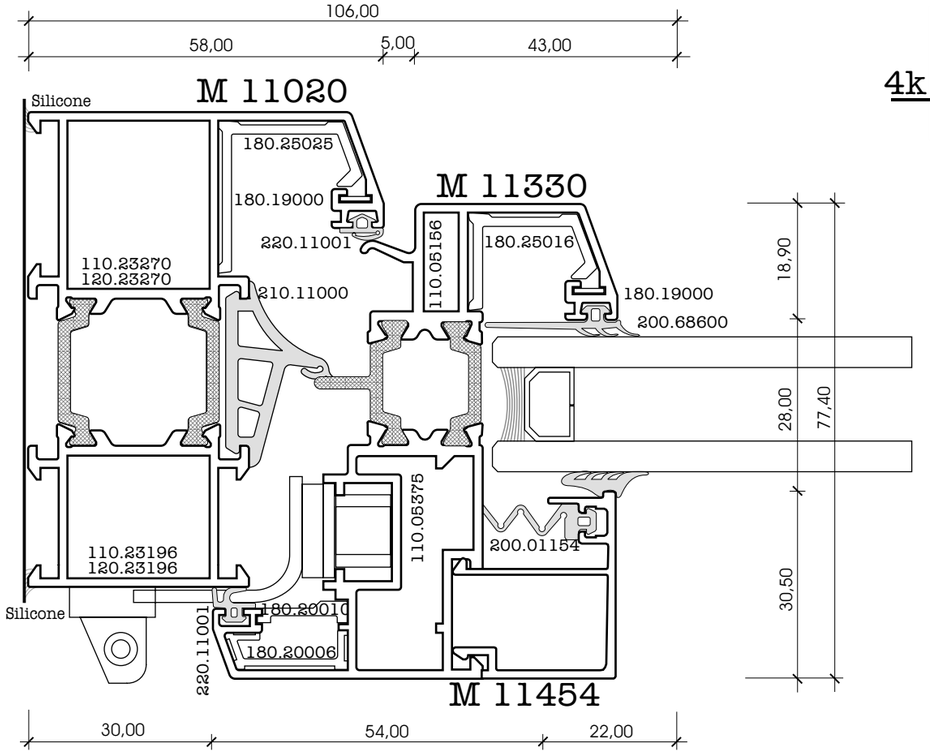
106,00
58,00
5,00
43,00
M 11020
Silicone
180.25025
180.19000
M 11330
220.11001
110.05156
180.25016
110.23270
120.23270
210.11000
180.19000
200.68600
18,90
28,00
77,40
110.05375
110.23196
120.23196
200.01154
30,50
Silicone
180.20010
220.11001
180.20006
M 11454
30,00
54,00
22,00

3h.

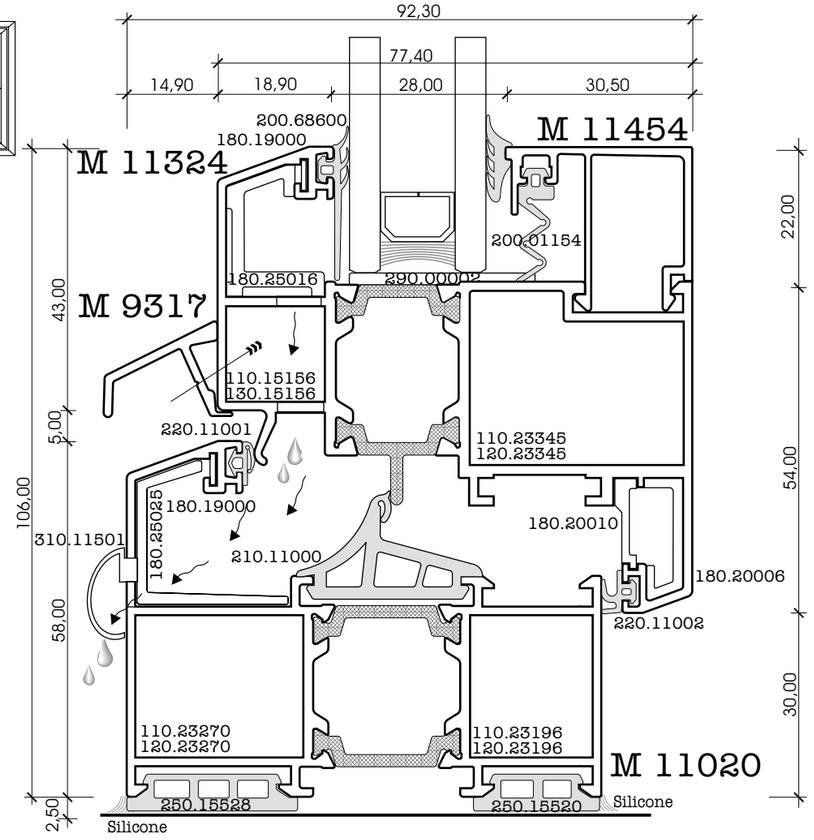
92,30
77,40
14,90
18,90
28,00
30,50
200.68600
180.19000
M 11454
M 11324
200.01154
180.25016
290.00002
M 9317
43,00
5,00
106,00
110.15156
130.15156
220.11001
110.23345
120.23345
180.19000
180.25025
310.11501
210.11000
180.20010
180.20006
220.11002
58,00
54,00
30,00
110.23270
120.23270
110.23196
120.23196
M 11020
250.15528
250.15520
Silicone
Silicone
2,50

3i

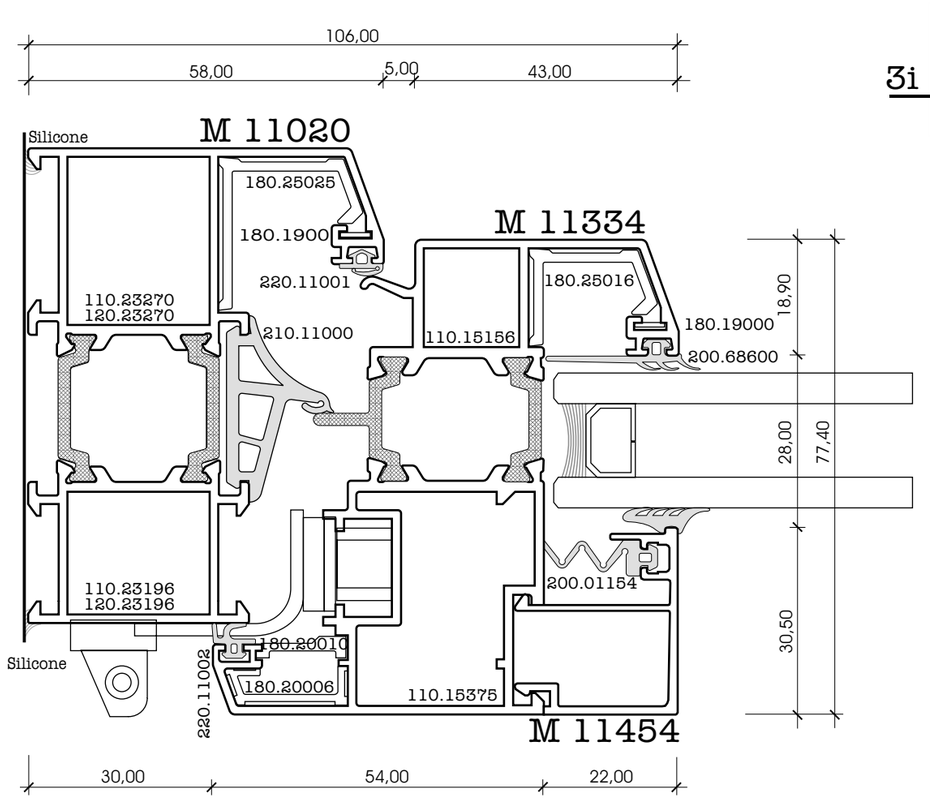
106,00
58,00
5,00
43,00
Silicone
M 11020
180.25025
180.1900
M 11334
220.11001
180.25016
110.23270
120.23270
210.11000
110.15156
180.19000
200.68600
18,90
28,00
77,40
110.23196
120.23196
200.01154
30,50
Silicone
180.20010
180.20006
220.11002
110.15375
M 11454
30,00
54,00
22,00

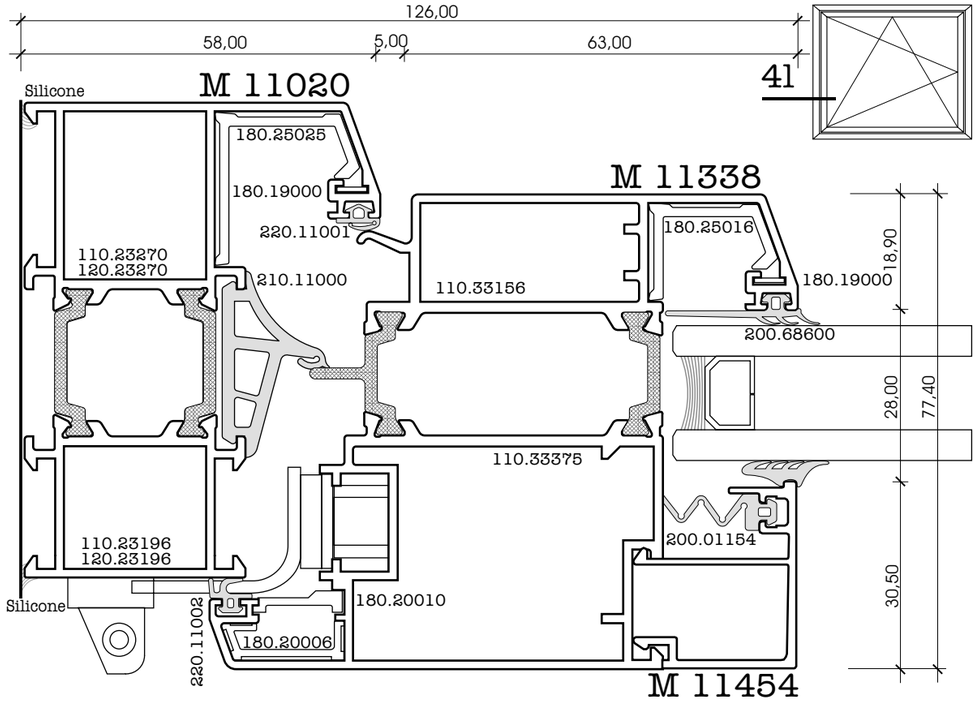
126,00
58,00
5,00
63,00
41
Silicone
M 11020
180.25025
180.19000
220.11001
110.23270
120.23270
210.11000
M 11338
110.33156
180.25016
180.19000
200.68600
18,90
28,00
77,40
30,50
110.33375
200.01154
110.23196
120.23196
180.20010
Silicone
220.11002
180.20006
M 11454
30,00
74,00
22,00

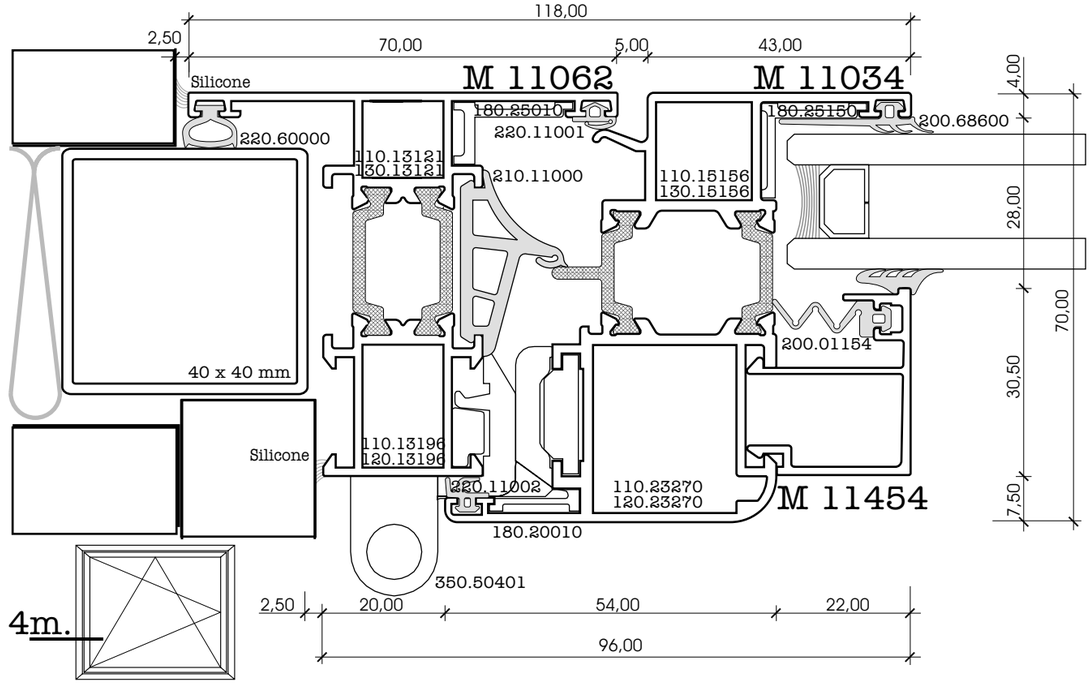
118,00
2,50
70,00
5,00
43,00
Silicone
M 11062
M 11034
180.25010
180.25150
220.60000
220.11001
110.13121
130.13121
210.11000
110.15156
130.15156
200.68600
4,00
28,00
70,00
30,50
7,50
40 x 40 mm
200.01154
110.13196
120.13196
Silicone
220.11002
110.23270
120.23270
M 11454
180.20010
350.50401
4m.
2,50
20,00
54,00
22,00
96,00

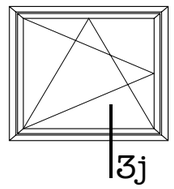
3j

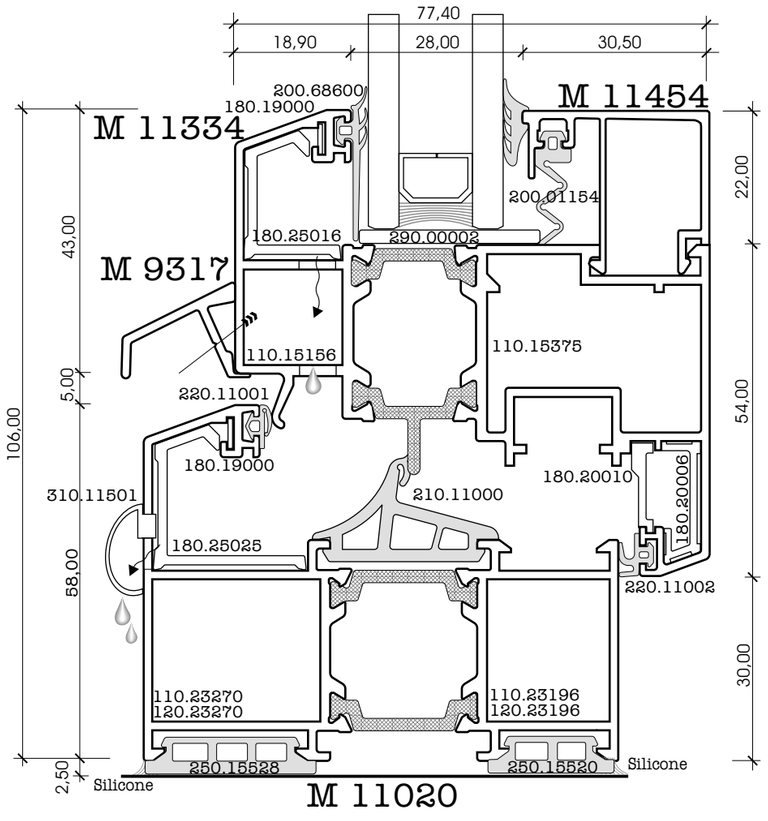
77,40
18,90
28,00
30,50
200.68600
180.19000
M 11334
M 11454
200.01154
180.25016
290.00002
M 9317
43,00
22,00
54,00
106,00
5,00
110.15156
110.15375
220.11001
180.19000
180.20010
180.20006
310.11501
210.11000
58,00
180.25025
220.11002
30,00
110.23270
120.23270
110.23196
120.23196
250.15528
250.15520
Silicone
2,50
Silicone
M 11020

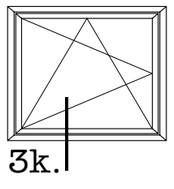
3k.

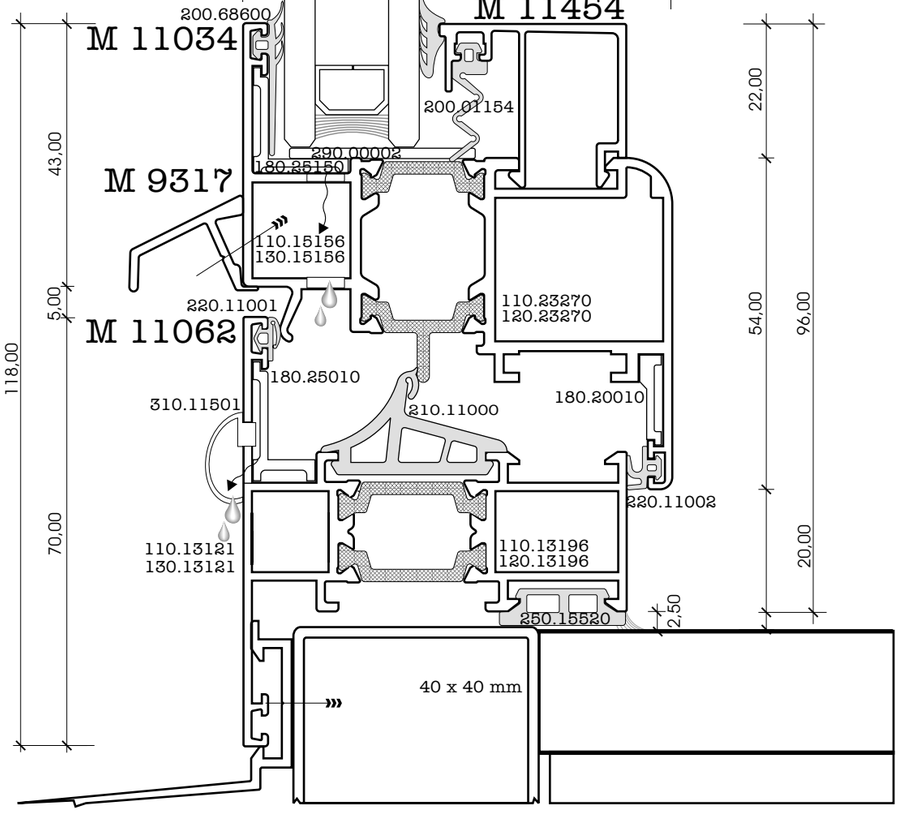
70,00
4,00
28,00
30,50
7,50
200.68600
M 11034
M 11454
200.01154
290.00002
180.25150
M 9317
43,00
22,00
54,00
96,00
118,00
5,00
110.15156
130.15156
220.11001
110.23270
120.23270
M 11062
180.25010
180.20010
310.11501
210.11000
220.11002
70,00
110.13121
130.13121
110.13196
120.13196
20,00
250.15520
2,50
40 x 40 mm

3l.

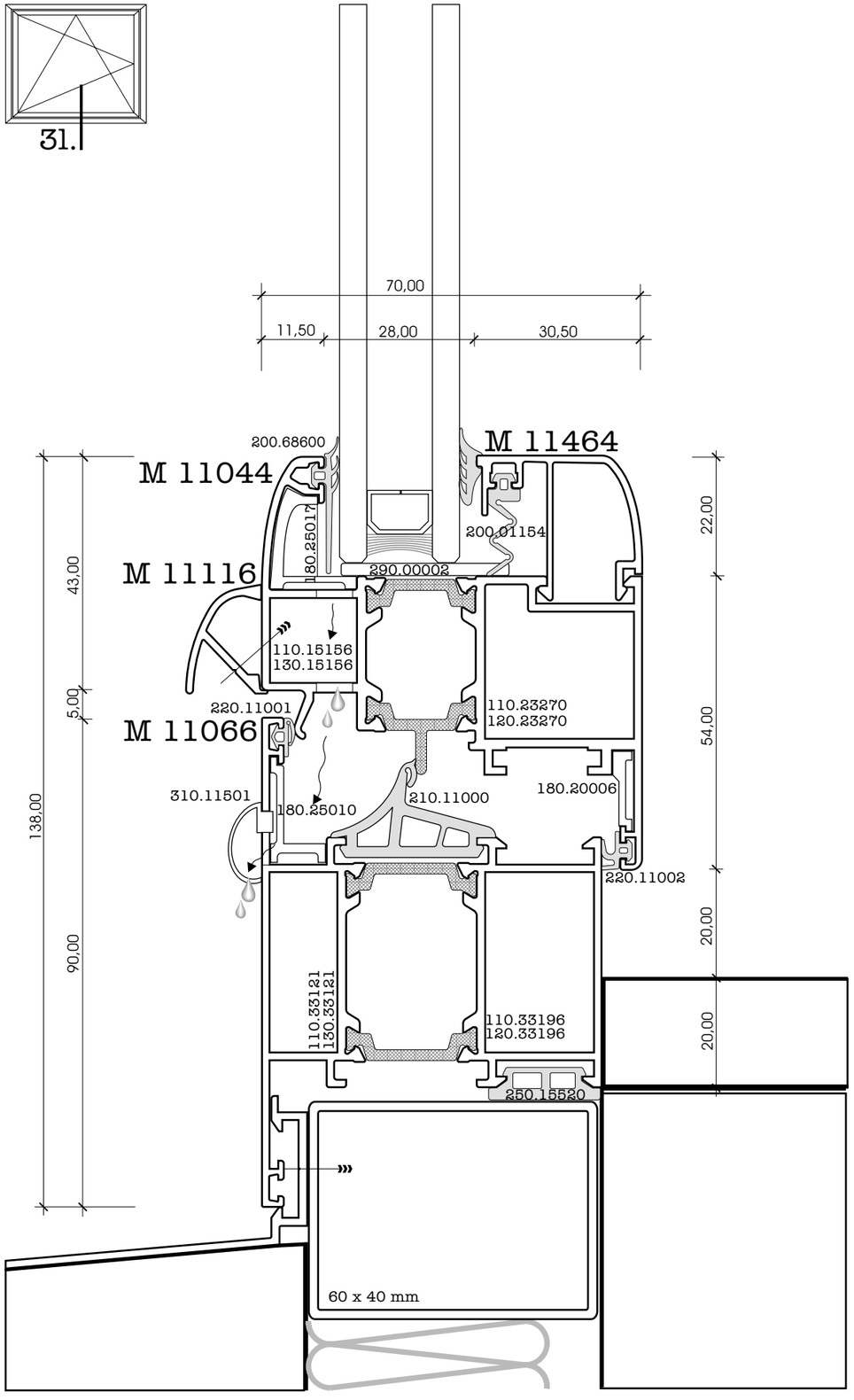
70,00
11,50
28,00
30,50
200.68600
M 11464
M 11044
200.01154
180.25017
M 11116
290.00002
110.15156
130.15156
43,00
5,00
220.11001
M 11066
110.23270
120.23270
54,00
22,00
138,00
310.11501
180.25010
210.11000
180.20006
220.11002
90,00
20,00
110.33121
130.33121
110.33196
120.33196
20,00
250.15520
60 x 40 mm

3m.

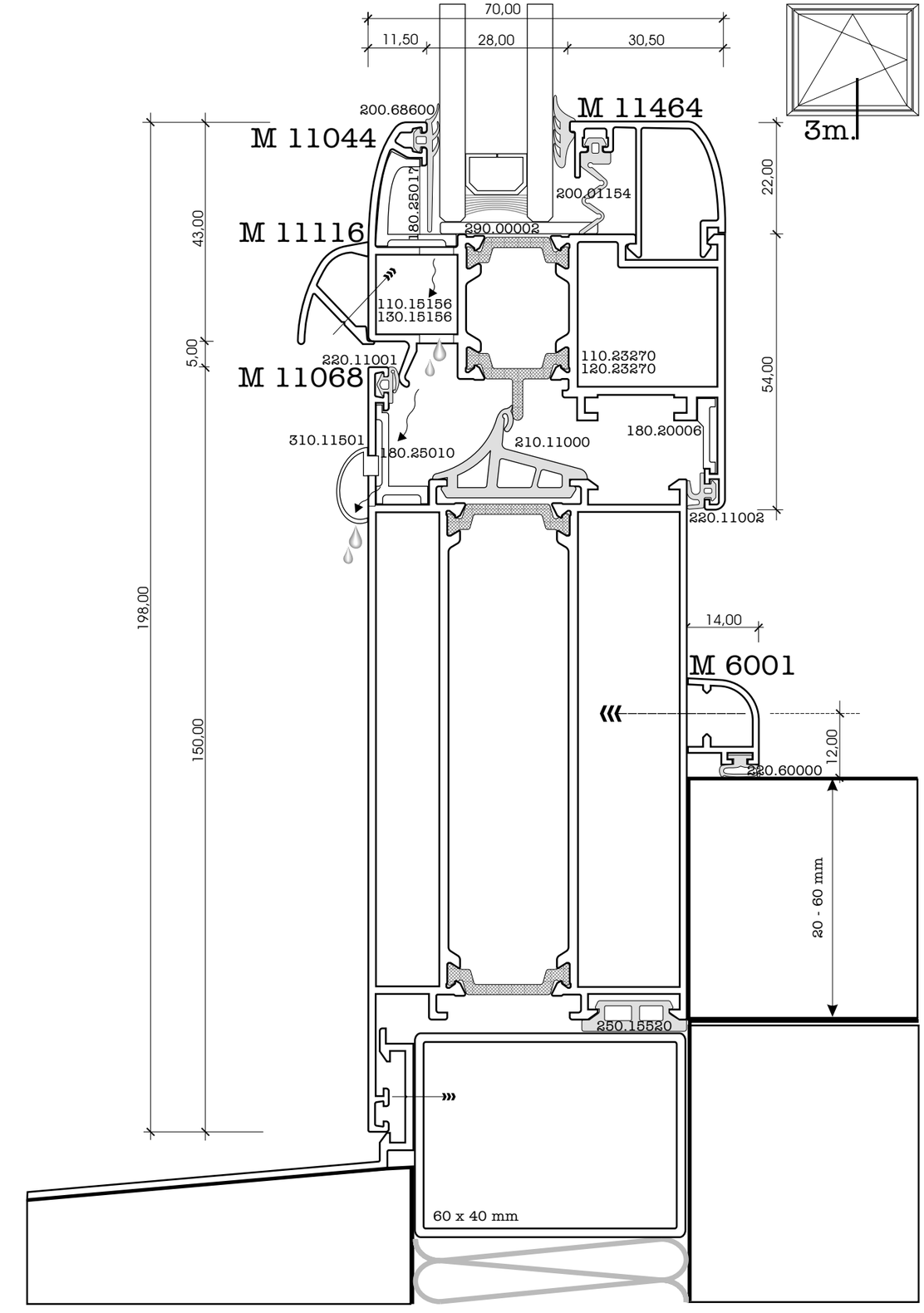
70,00
11,50
28,00
30,50
200.68600
M 11464
M 11044
200.01154
180.25017
22,00
M 11116
290.00002
43,00
110.15156
130.15156
5,00
220.11001
110.23270
120.23270
M 11068
54,00
310.11501
180.25010
210.11000
180.20006
220.11002
198,00
14,00
M 6001
150,00
12,00
220.60000
20 - 60 mm
250.15520
60 x 40 mm

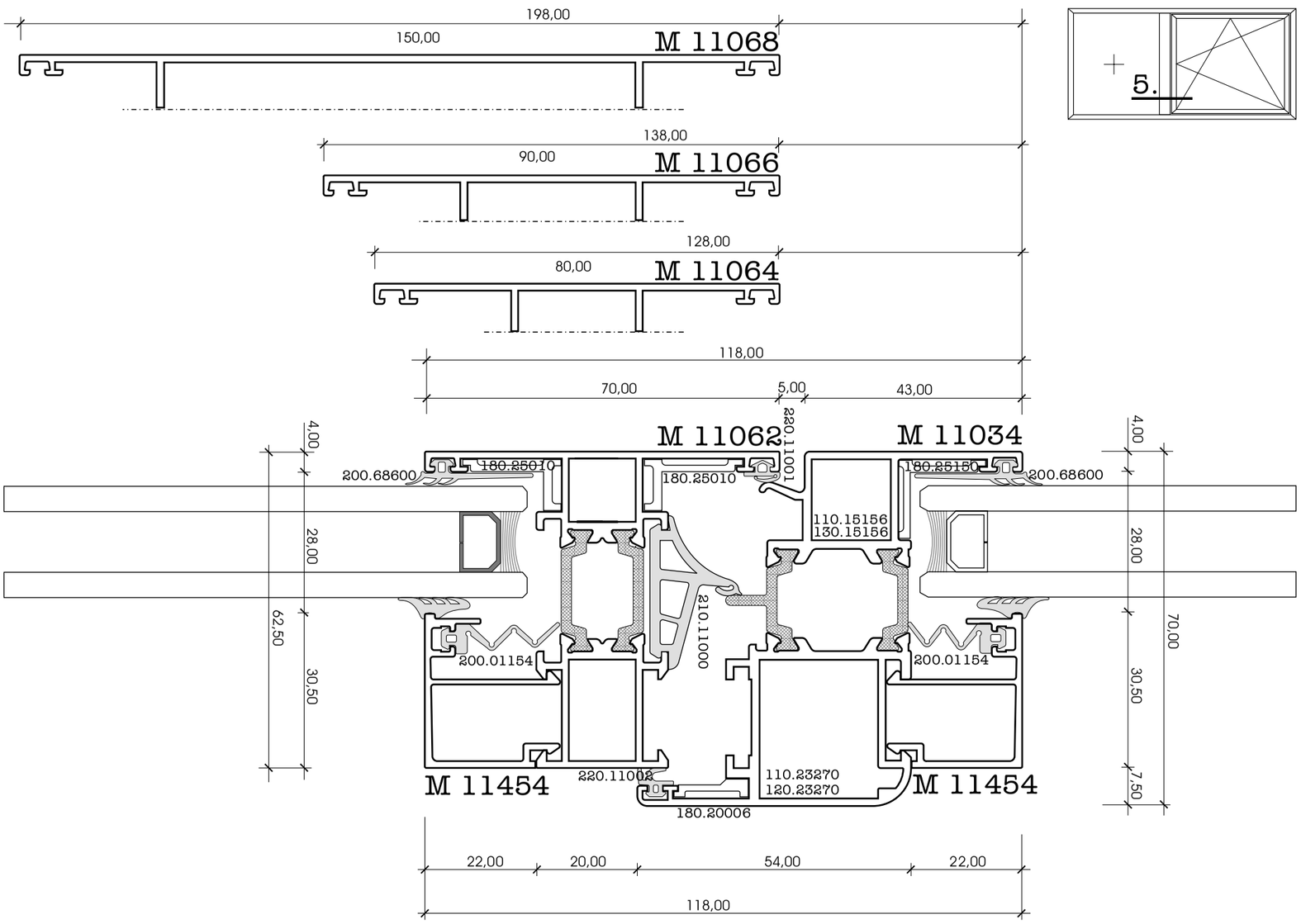
198,00
150,00
M 11068
138,00
90,00
M 11066
128,00
80,00
M 11064
118,00
70,00
5,00
43,00
M 11062
M 11034
220.11001
4,00
200.68600
180.25010
180.25150
110.15156
130.15156
28,00
62,50
30,50
210.11000
200.01154
M 11454
220.11002
180.20006
7,50
70,00
22,00
20,00
54,00
118,00

5.

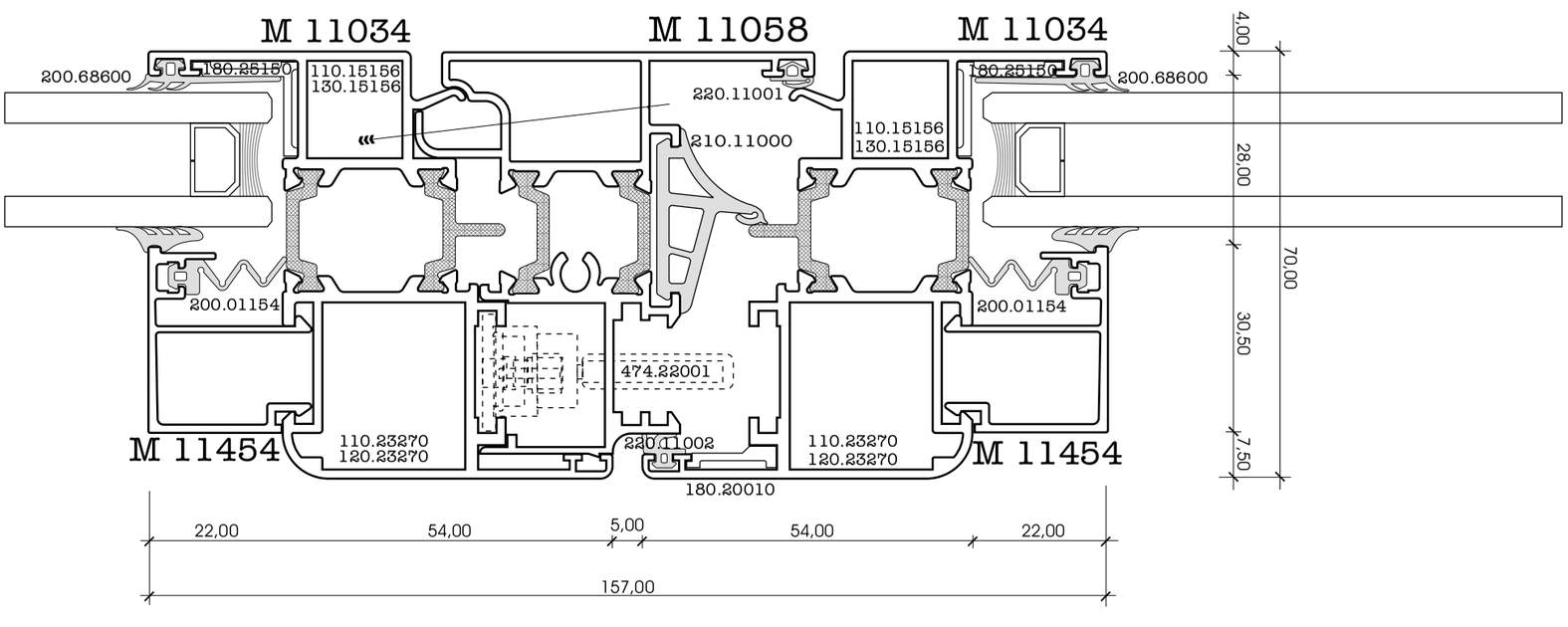
157,00
43,00
5,00
61,00
M 11034
M 11058
M 11034
200.68600
180.25150
110.15156
130.15156
220.11001
210.11000
4,00
28,00
70,00
30,50
7,50
200.01154
474.22001
M 11454
220.11002
180.20010
22,00
54,00
157,00

6.

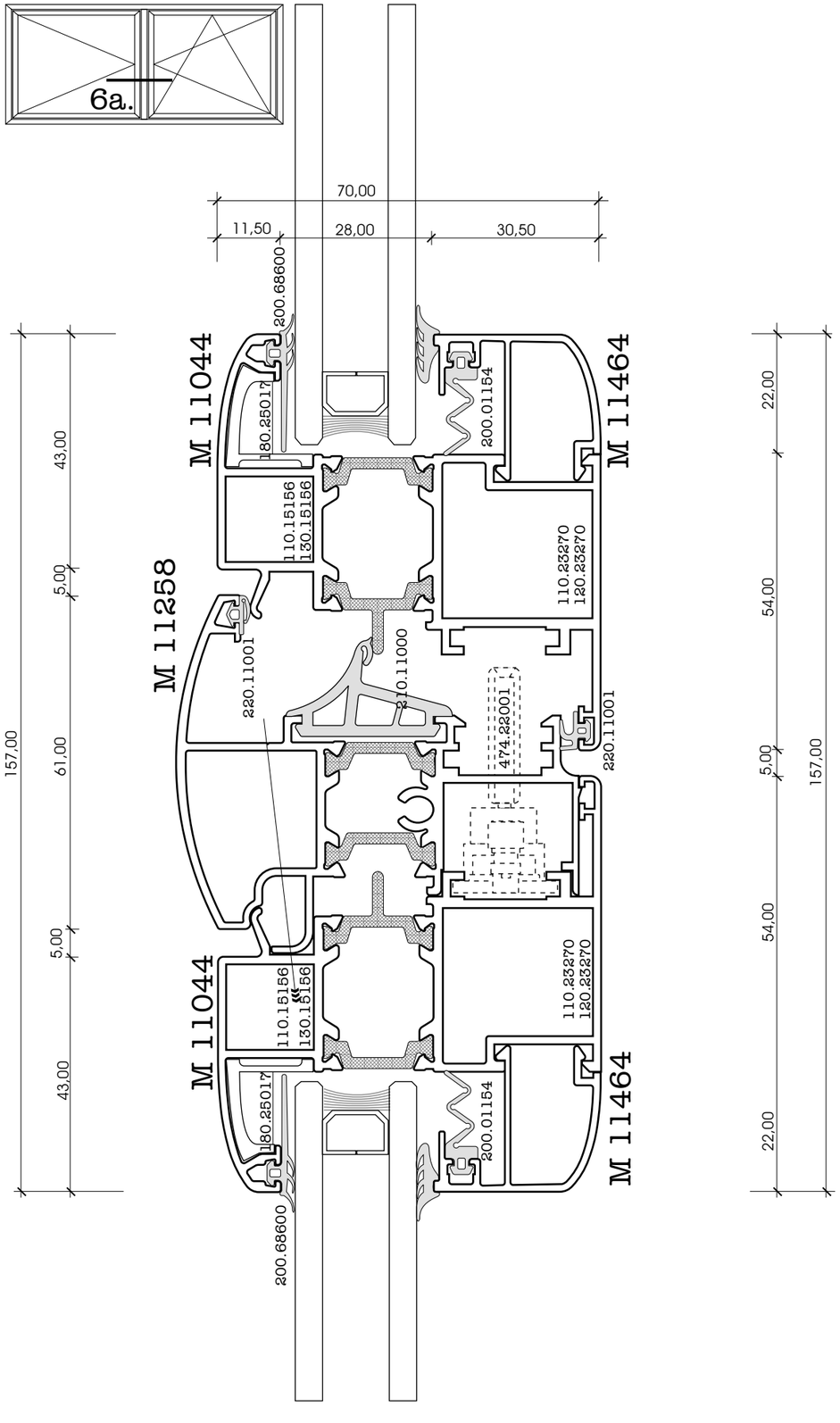
6a.
70,00
11,50
28,00
30,50
200.68600
180.25017
200.01154
M 11044
M 11464
M 11258
110.15156
130.15156
110.23270
120.23270
220.11001
210.11000
474.22001
220.11001
43,00
5,00
61,00
157,00
22,00
54,00

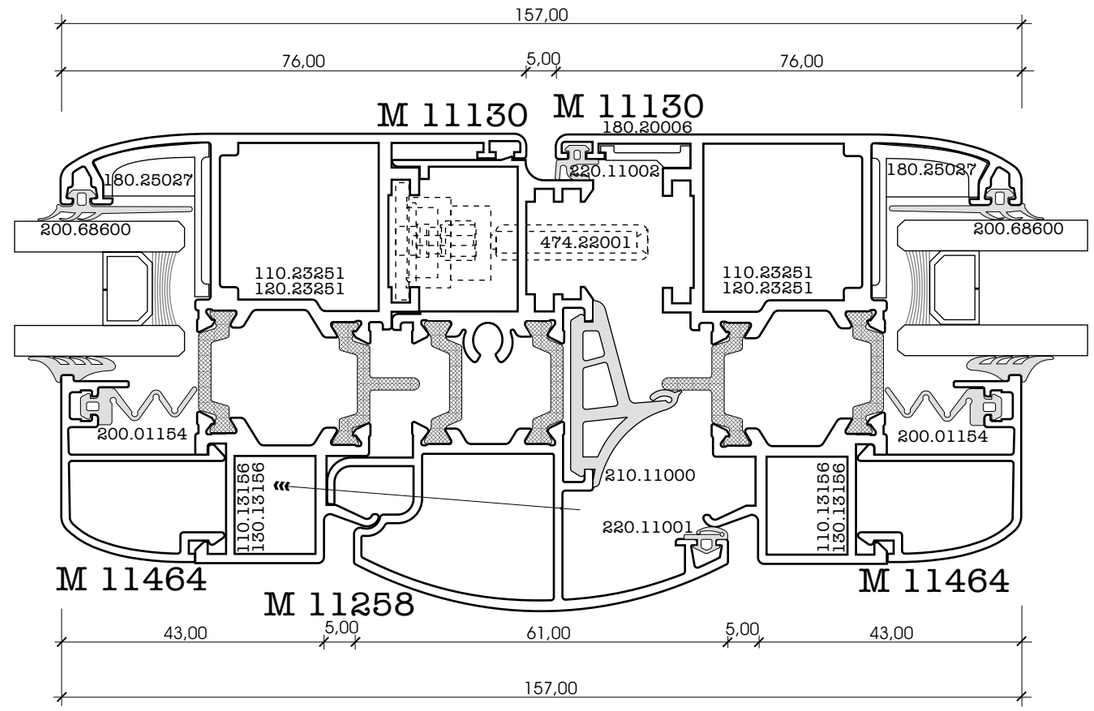
157,00
76,00
5,00
76,00
M 11130
M 11130
180.20006
180.25027
220.11002
180.25027
200.68600
474.22001
200.68600
110.23251
120.23251
110.23251
120.23251
200.01154
200.01154
210.11000
110.13156
130.13156
220.11001
110.13156
130.13156
M 11464
M 11258
M 11464
43,00
5,00
61,00
5,00
43,00
157,00

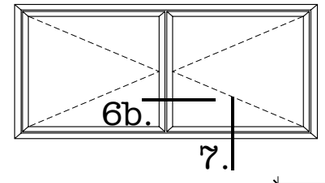
6b.
7.

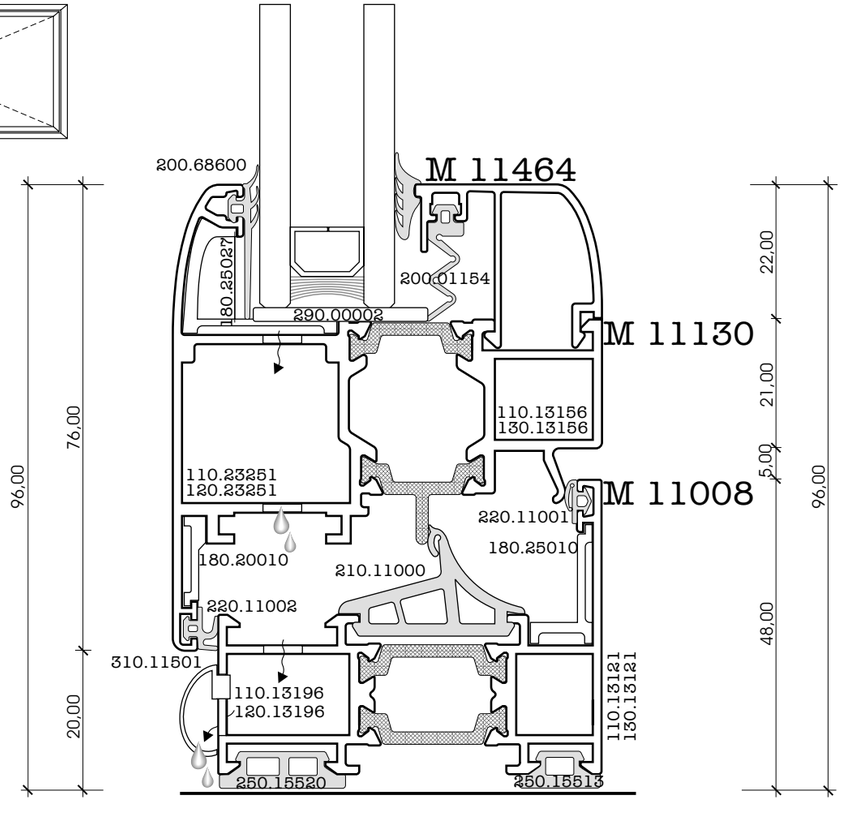
200.68600
M 11464
180.25027
200.01154
290.00002
M 11130
110.13156
130.13156
110.23251
120.23251
M 11008
220.11001
180.25010
180.20010
210.11000
220.11002
310.11501
110.13196
120.13196
110.13121
130.13121
250.15520
250.15513
96,00
76,00
20,00
22,00
21,00
5,00
48,00
96,00

8.

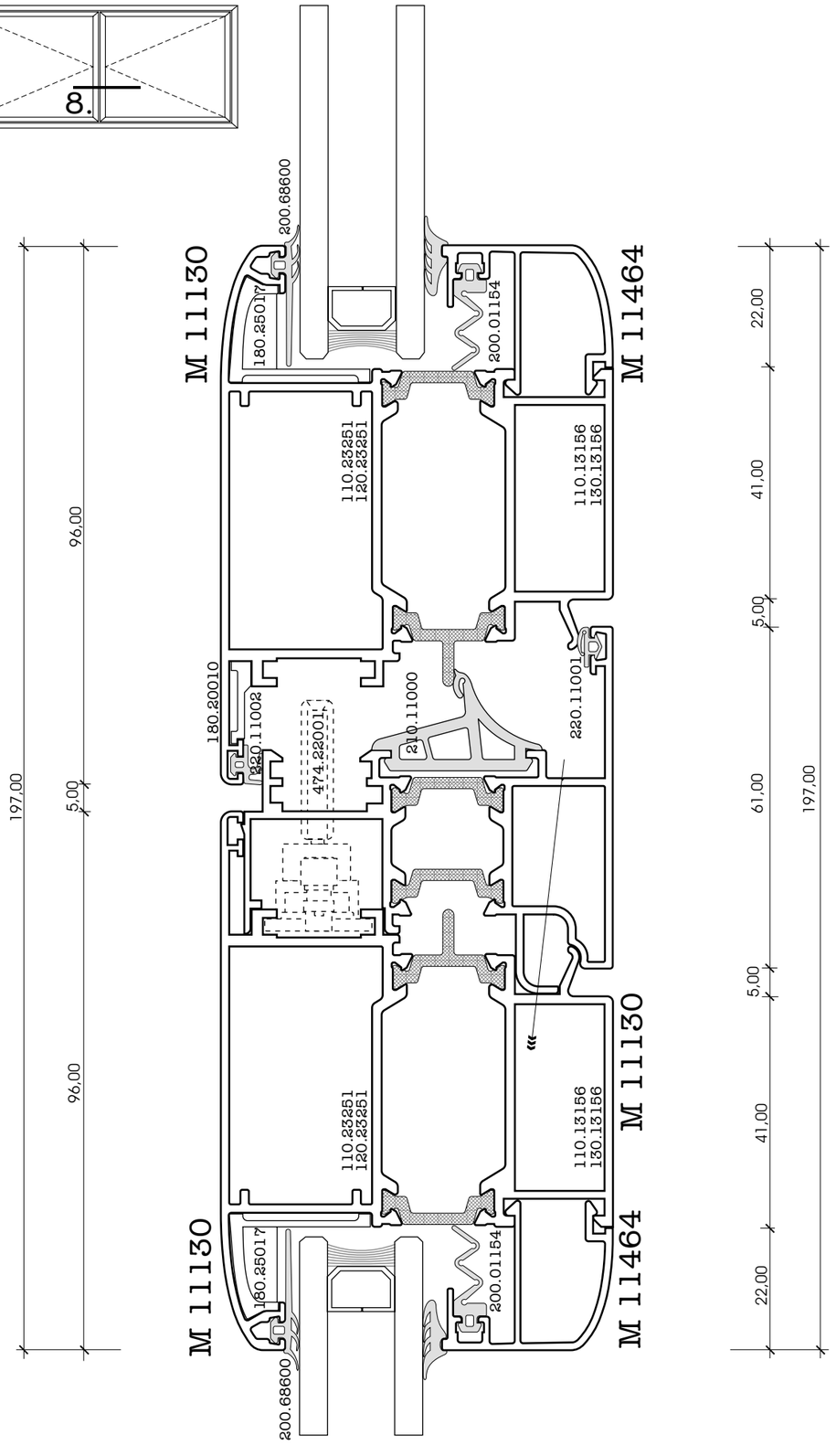
M 11130
M 11464
200.68600
180.25017
200.01154
110.23251
120.23251
110.13156
130.13156
180.20010
220.11002
210.11000
474.22001
220.11001
M 11130
M 11464
96,00
197,00
5,00
96,00
22,00
41,00
5,00
61,00
5,00
41,00
22,00
197,00

9.

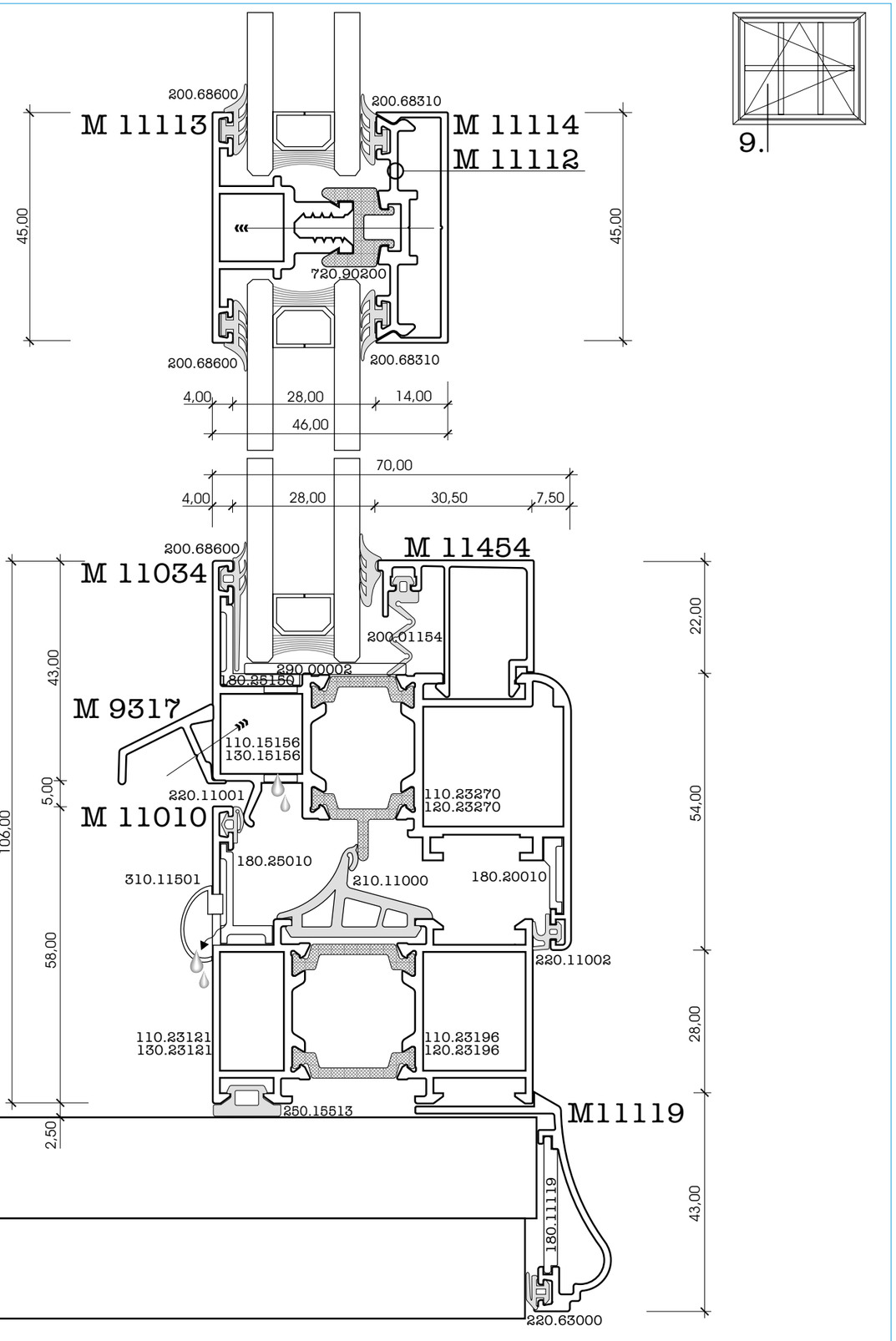
M 11113
M 11114
M 11112
200.68600
200.68310
720.90200
45,00
45,00
4,00
28,00
14,00
46,00
70,00
4,00
28,00
30,50
7,50
M 11034
M 11454
200.01154
290.00002
180.25150
M 9317
110.15156
130.15156
220.11001
M 11010
180.25010
310.11501
210.11000
180.20010
220.11002
110.23121
130.23121
110.23196
120.23196
250.15513
M11119
180.11119
220.63000
43,00
5,00
106,00
58,00
2,50
22,00
54,00
28,00
43,00

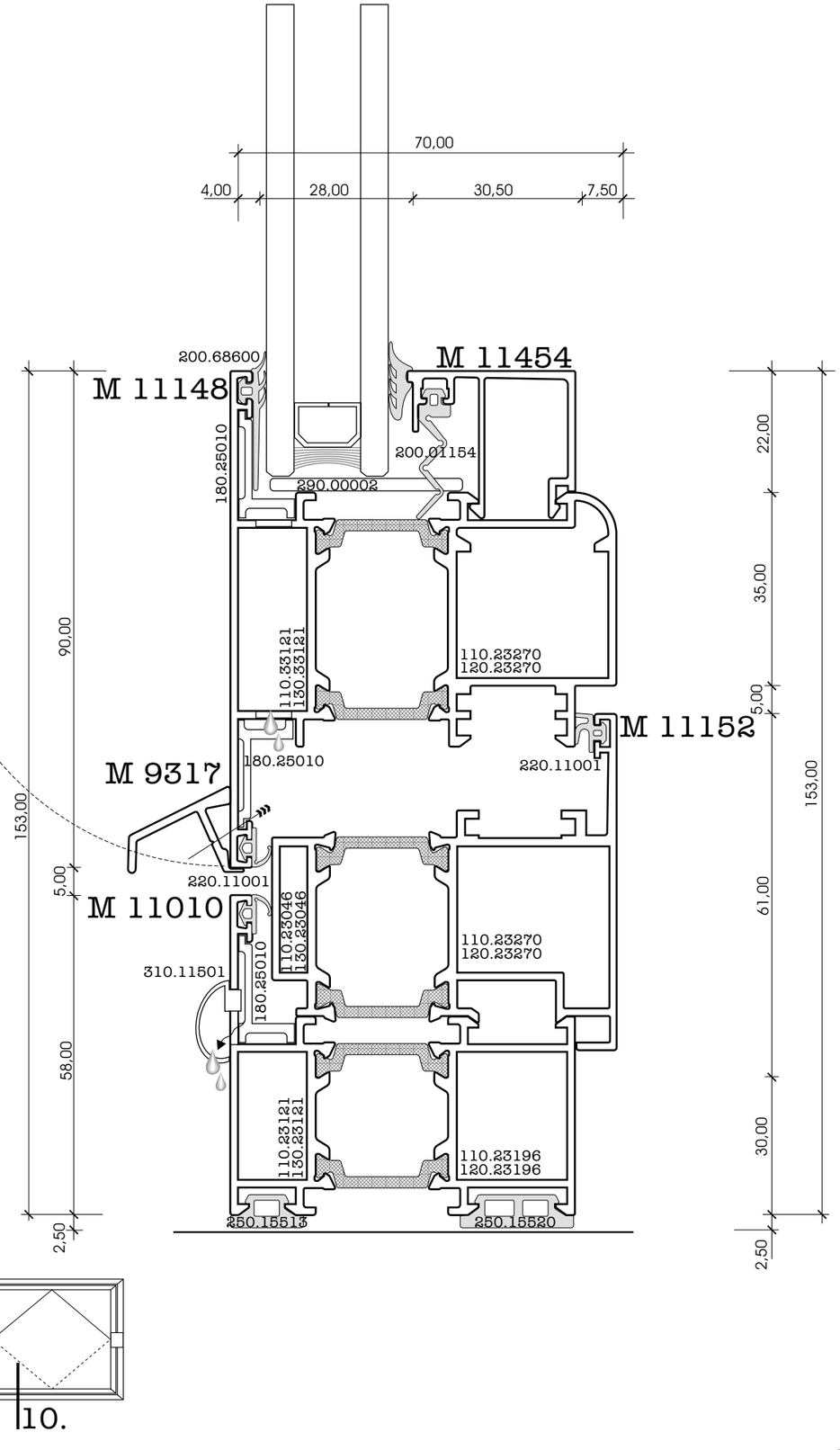
70,00
4,00
28,00
30,50
7,50
M 11454
M 11148
200.68600
180.25010
200.01154
390.00002
110.23270
120.23270
110.33121
130.33121
M 11152
M 9317
180.25010
220.11001
220.11001
M 11010
110.23046
130.23046
310.11501
180.25010
110.23270
120.23270
110.23121
130.23121
110.23196
120.23196
250.15513
250.15520
90,00
153,00
5,00
58,00
2,50
22,00
35,00
5,00
61,00
30,00
153,00
2,50
10.

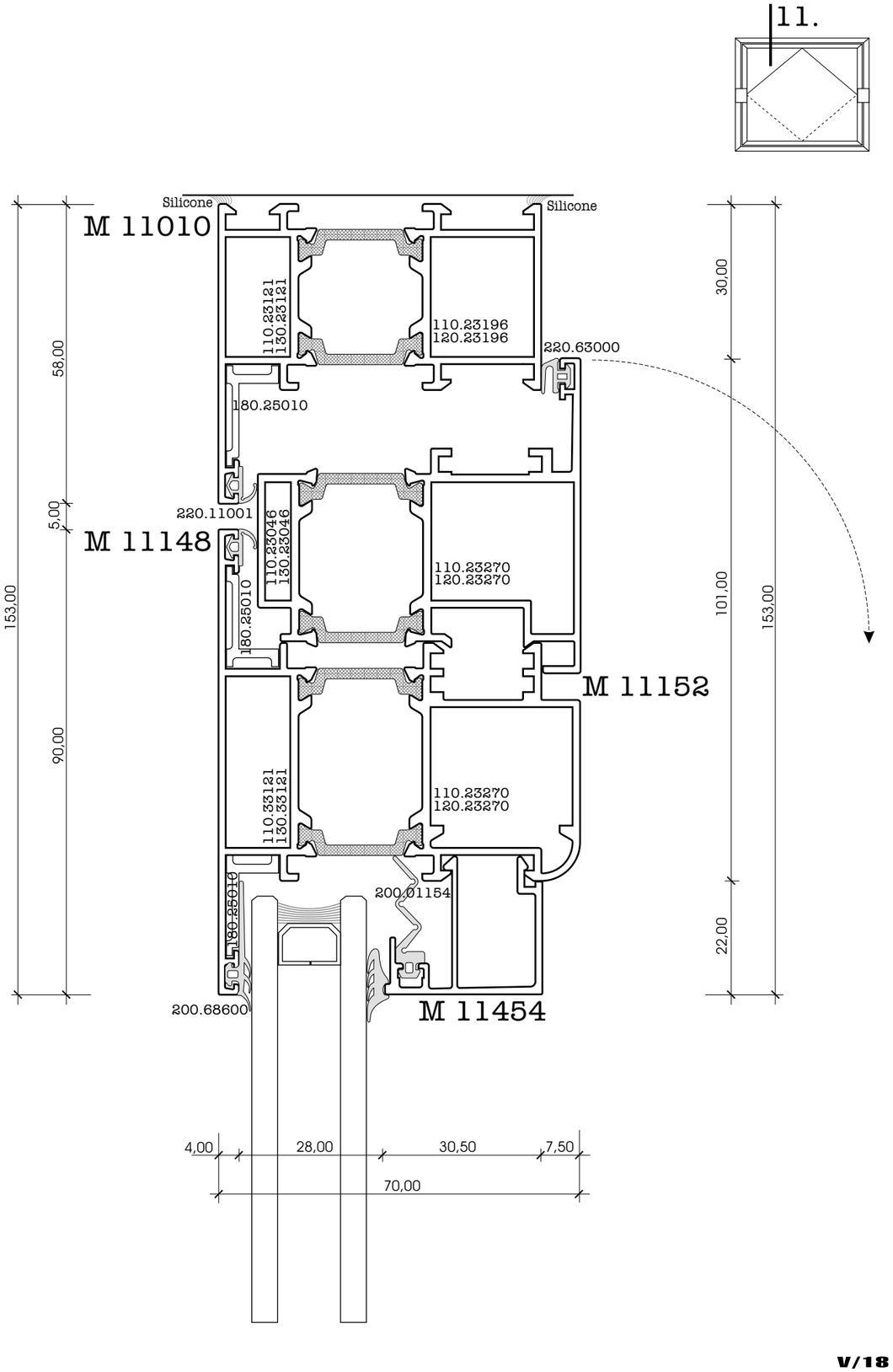
11.
Silicone
Silicone
M 11010
110.23121
130.23121
110.23196
120.23196
220.63000
180.25010
220.11001
M 11148
110.23046
130.23046
110.23270
120.23270
180.25010
M 11152
110.33121
130.33121
110.23270
120.23270
200.01154
180.25010
200.68600
M 11454
4,00
28,00
30,50
7,50
70,00
153,00
58,00
5,00
90,00
30,00
101,00
153,00
22,00

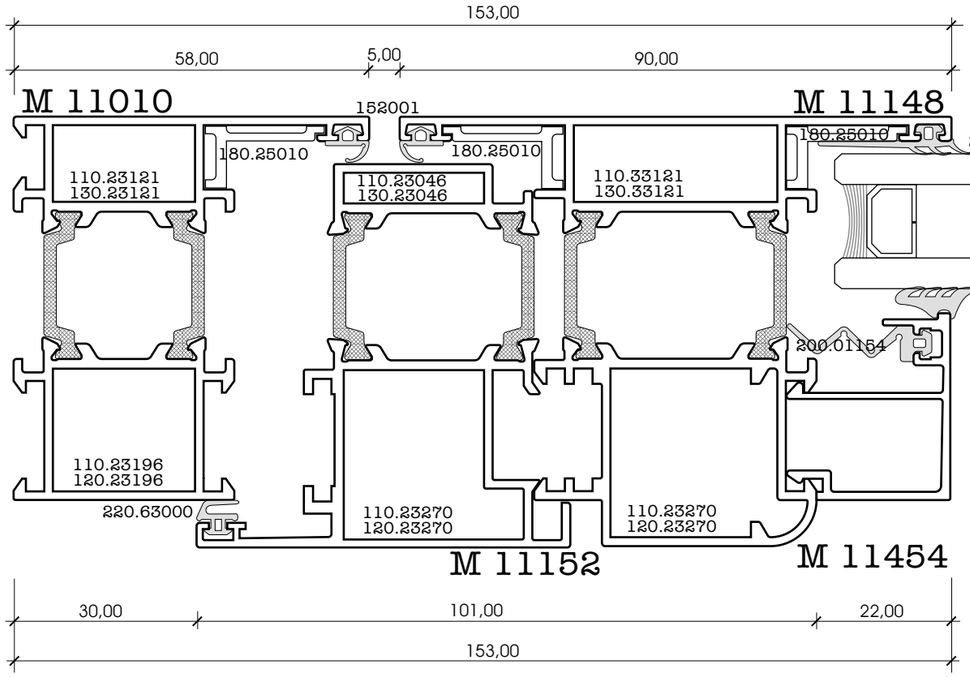
153,00
58,00
5,00
90,00
M 11010
M 11148
152001
180.25010
180.25010
200.68600
110.23121
130.23121
110.23046
130.23046
110.33121
130.33121
200.01154
110.23196
120.23196
220.63000
110.23270
120.23270
110.23270
120.23270
M 11152
M 11454
30,00
101,00
22,00
153,00

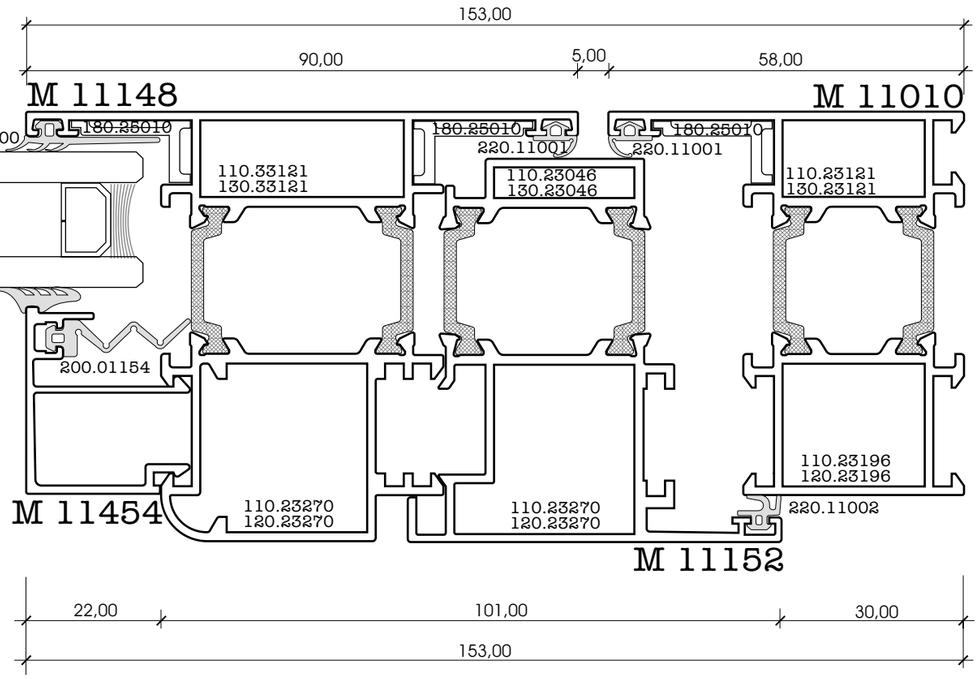
153,00
90,00
5,00
58,00
M 11148
M 11010
180.25010
180.25010
180.25010
220.11001
220.11001
200.68600
200.68600
110.33121
130.33121
110.23046
130.23046
110.23121
130.23121
200.01154
110.23196
120.23196
M 11454
110.23270
120.23270
110.23270
120.23270
220.11002
M 11152
22,00
101,00
30,00
153,00

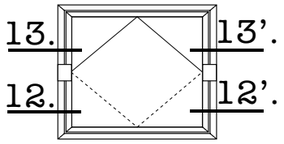
13.
13'.
12.
12'.

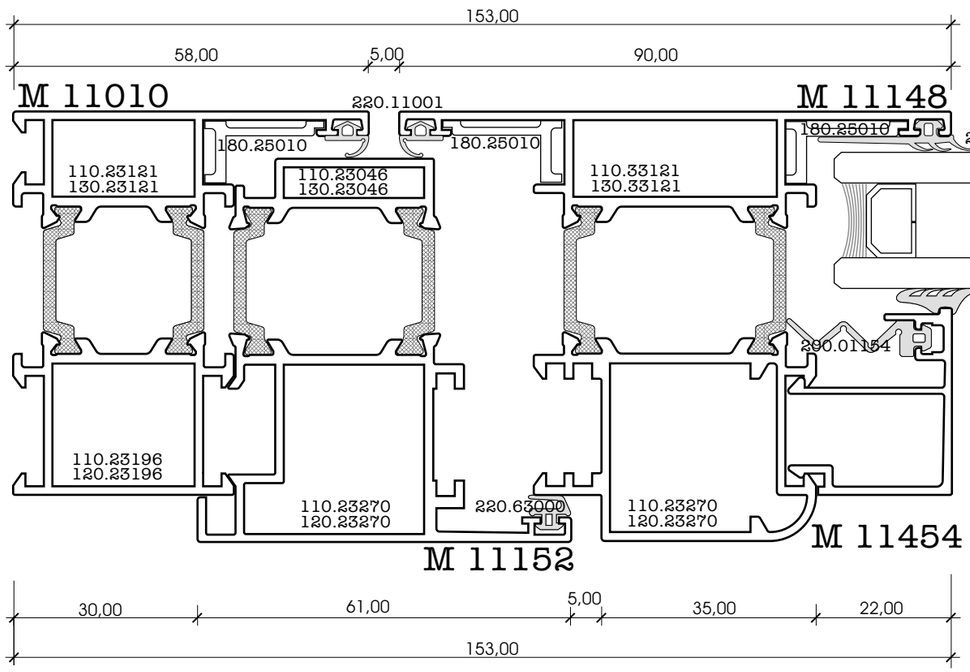
153,00
58,00
5,00
90,00
M 11010
M 11148
220.11001
180.25010
180.25010
200.68600
110.23121
130.23121
110.23046
130.23046
110.33121
130.33121
200.01154
110.23196
120.23196
220.63000
110.23270
120.23270
110.23270
120.23270
M 11152
M 11454
30,00
61,00
5,00
35,00
22,00
153,00

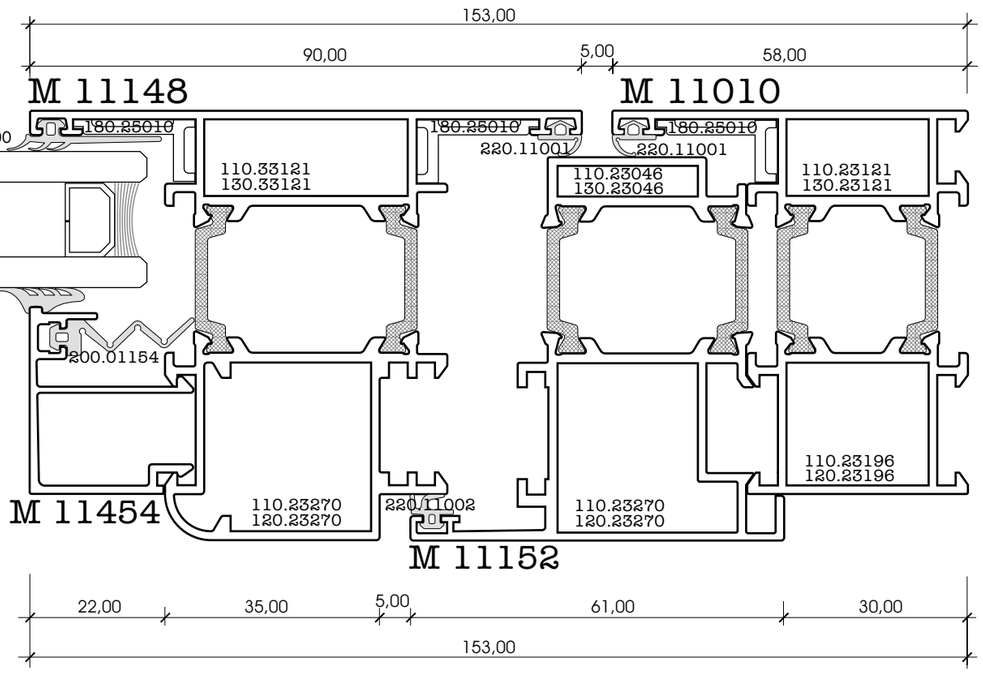
153,00
90,00
5,00
58,00
M 11148
M 11010
180.25010
180.25010
180.25010
220.11001
220.11001
200.68600
200.68600
110.33121
130.33121
110.23046
130.23046
110.23121
130.23121
200.01154
110.23196
120.23196
M 11454
110.23270
120.23270
220.11002
110.23270
120.23270
M 11152
22,00
35,00
5,00
61,00
30,00
153,00

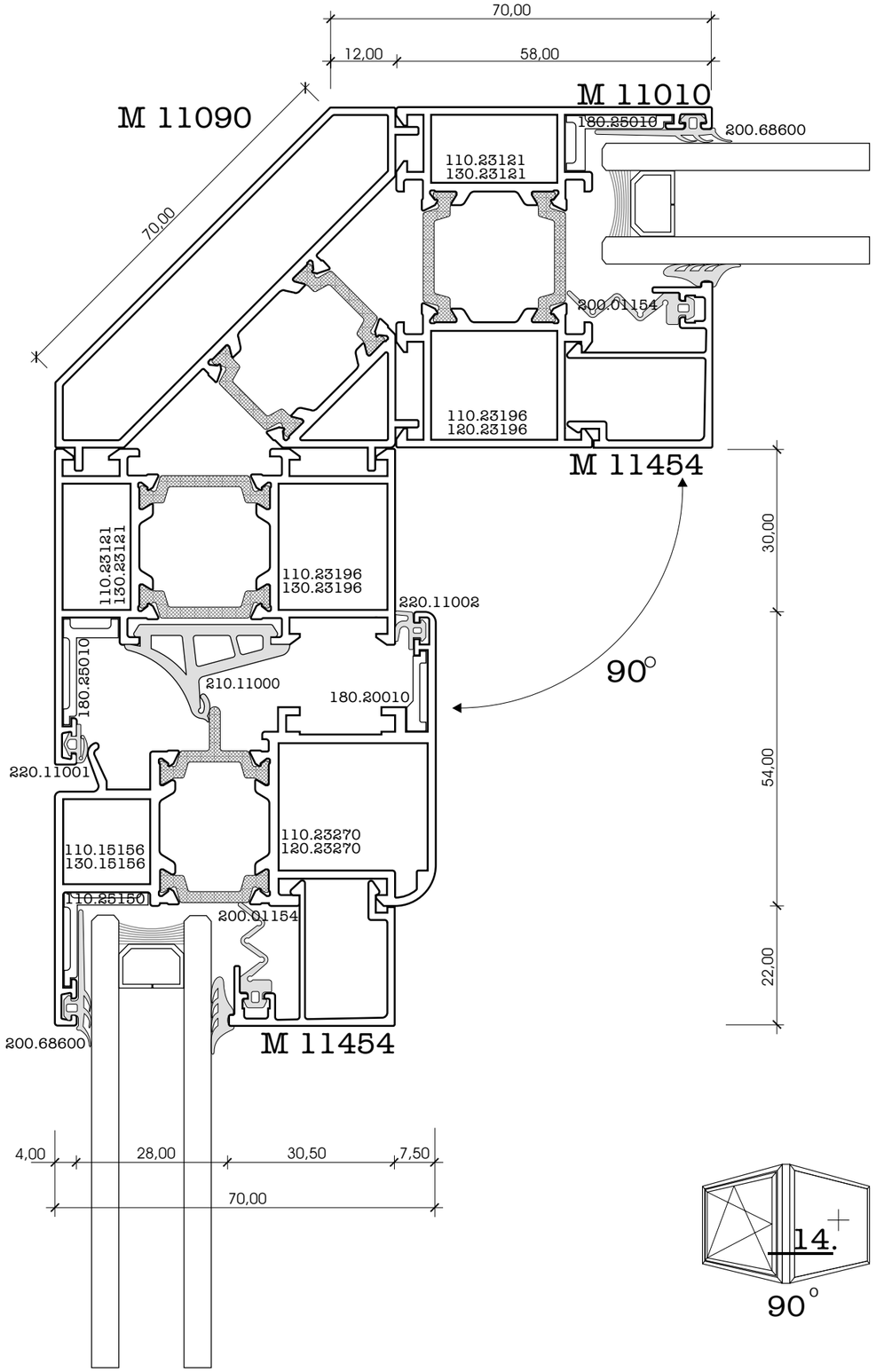
70,00
12,00
58,00
M 11090
M 11010
180.25010
200.68600
110.23121
130.23121
70,00
200.01154
110.23196
120.23196
M 11454
110.23121
130.23121
110.23196
130.23196
220.11002
30,00
90°
180.25010
210.11000
180.20010
220.11001
110.15156
130.15156
110.23270
120.23270
110.25150
200.01154
200.68600
M 11454
4,00
28,00
30,50
7,50
70,00
54,00
22,00

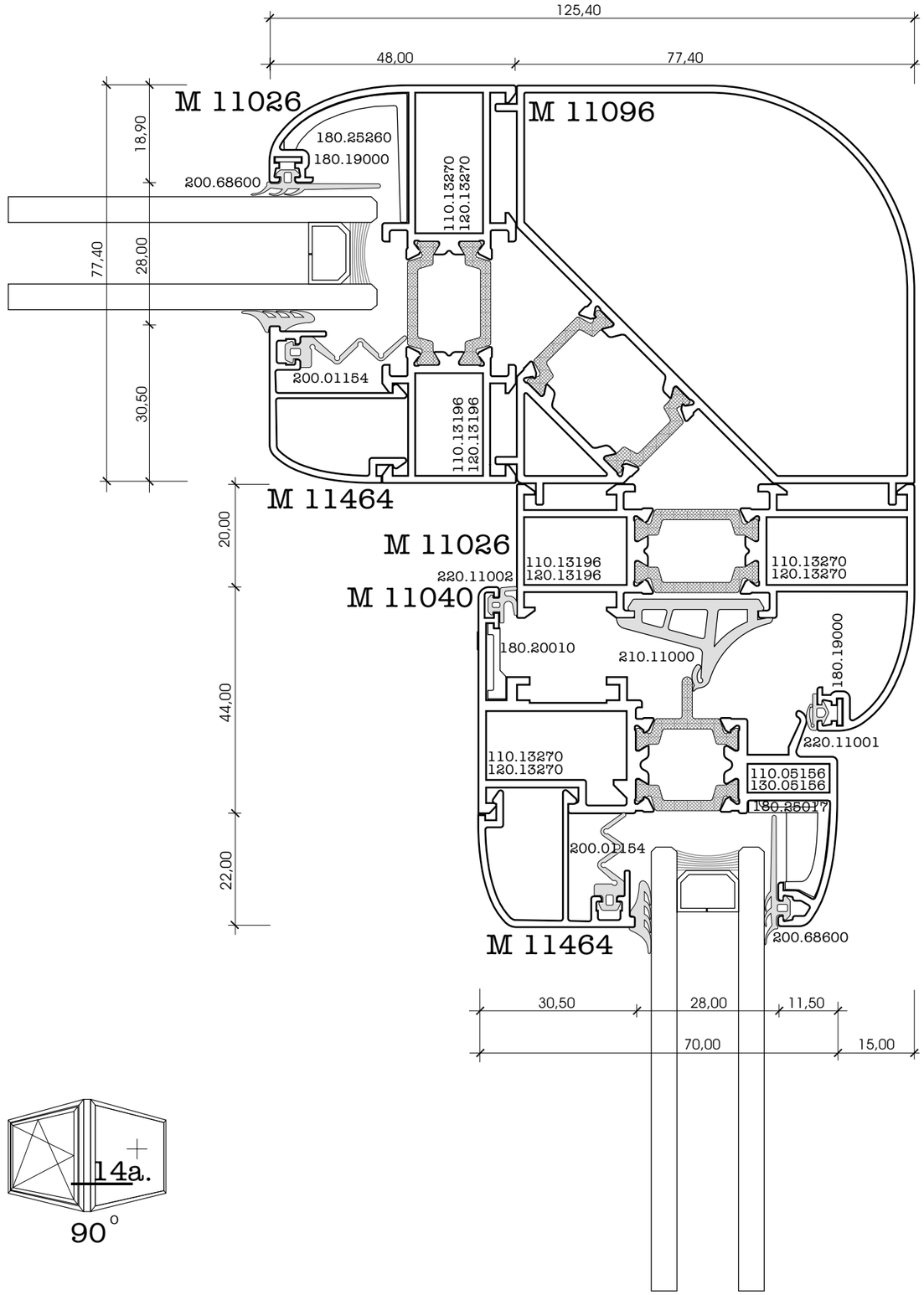
125,40
48,00
77,40
M 11026
M 11096
18,90
180.25260
180.19000
200.68600
110.13270
120.13270
77,40
28,00
30,50
200.01154
110.13196
120.13196
M 11464
20,00
M 11026
110.13196
120.13196
110.13270
120.13270
220.11002
M 11040
180.20010
210.11000
180.19000
44,00
220.11001
110.13270
120.13270
110.05156
130.05156
180.25077
200.01154
22,00
M 11464
200.68600
30,50
28,00
11,50
70,00
15,00

14.
90°

14a.
90°

15.

135°

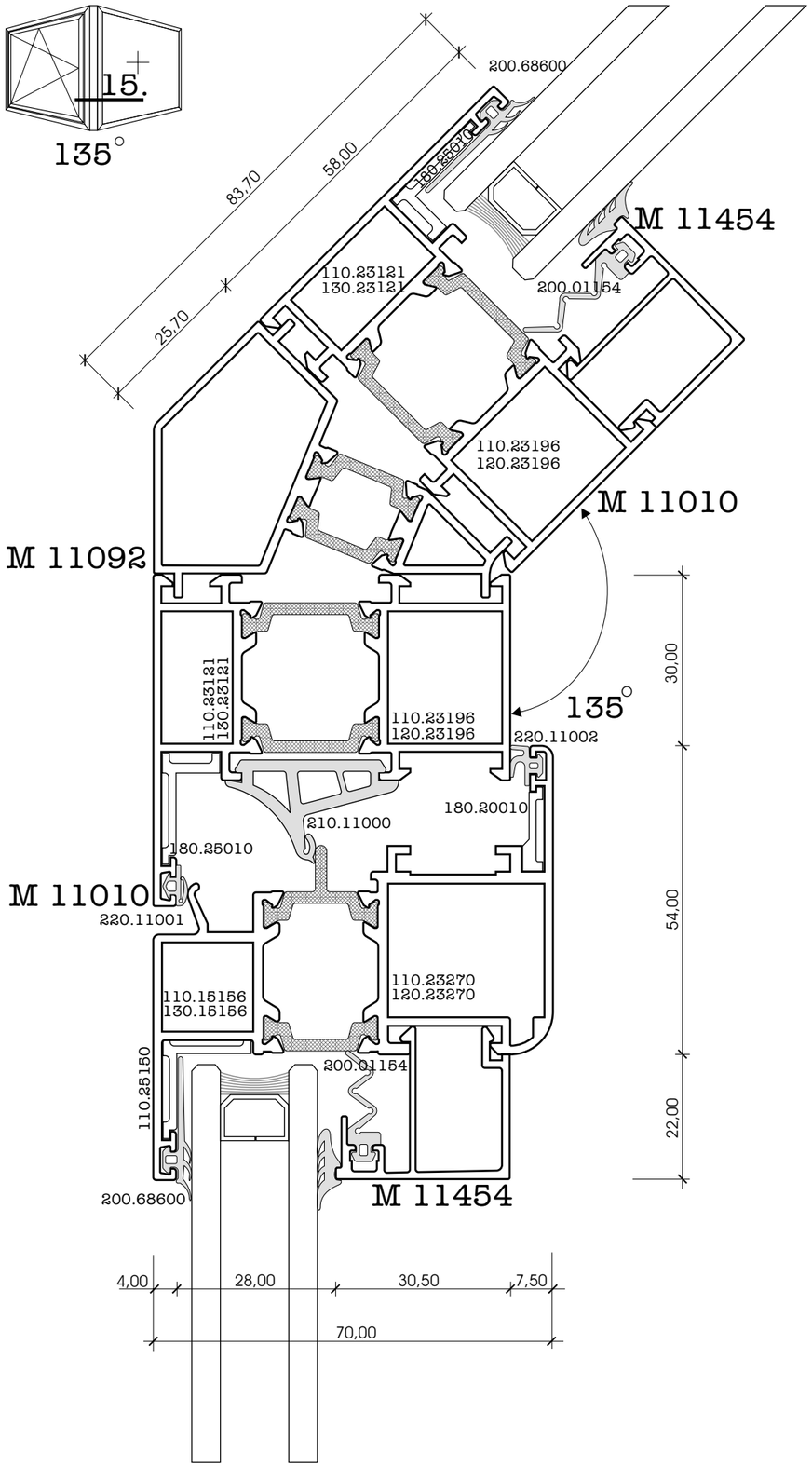

15a.

135°

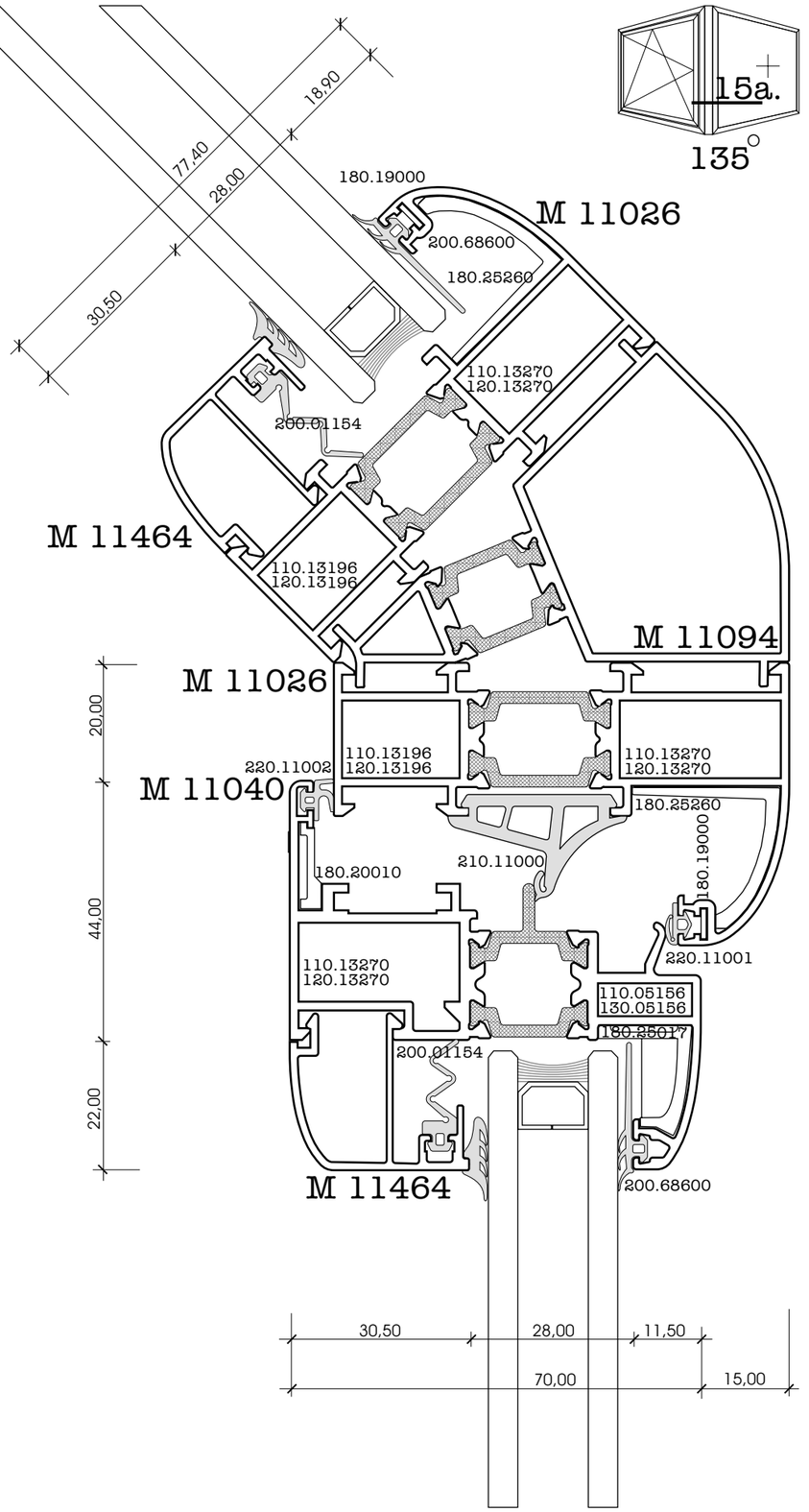

16.
90°-160°

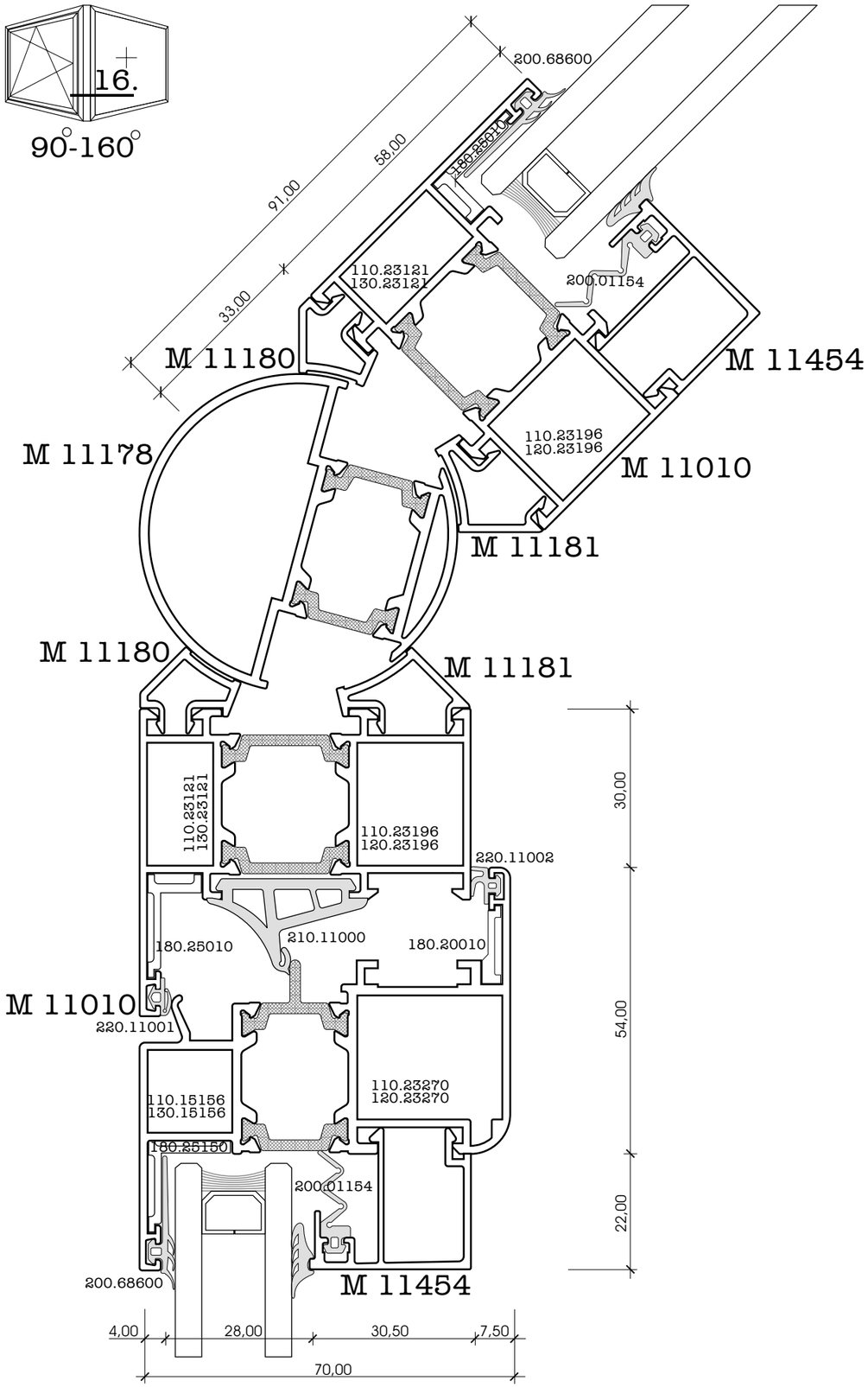
200.68600
91,00
58,00
33,00
180.25010
110.23121
130.23121
200.01154
M 11180
M 11454
M 11178
110.23196
120.23196
M 11010
M 11181
M 11180
M 11181
110.23121
130.23121
110.23196
120.23196
220.11002
180.25010
210.11000
180.20010
M 11010
220.11001
110.15156
130.15156
110.23270
120.23270
180.25150
200.01154
200.68600
M 11454
30,00
54,00
22,00
4,00
28,00
30,50
7,50
70,00

17.
200-270°

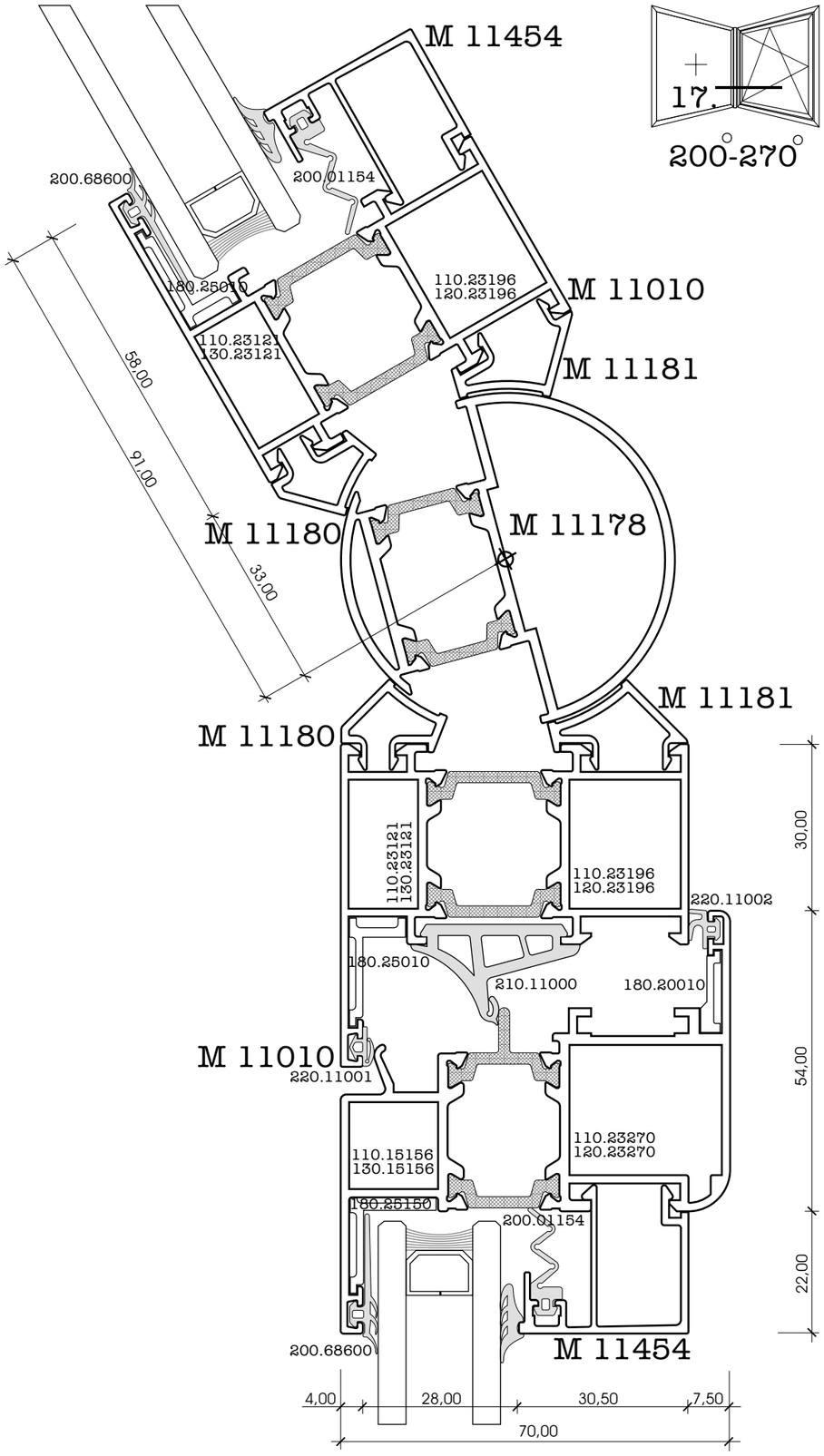
M 11454
200.68600
200.01154
180.25010
110.23196
120.23196
M 11010
110.23121
130.23121
M 11181
58,00
91,00
M 11180
33,00
M 11178
M 11181
M 11180
110.23121
130.23121
110.23196
120.23196
220.11002
180.25010
210.11000
180.20010
M 11010
220.11001
110.15156
130.15156
110.23270
120.23270
180.25150
200.01154
200.68600
M 11454
30,00
54,00
22,00
4,00
28,00
30,50
7,50
70,00

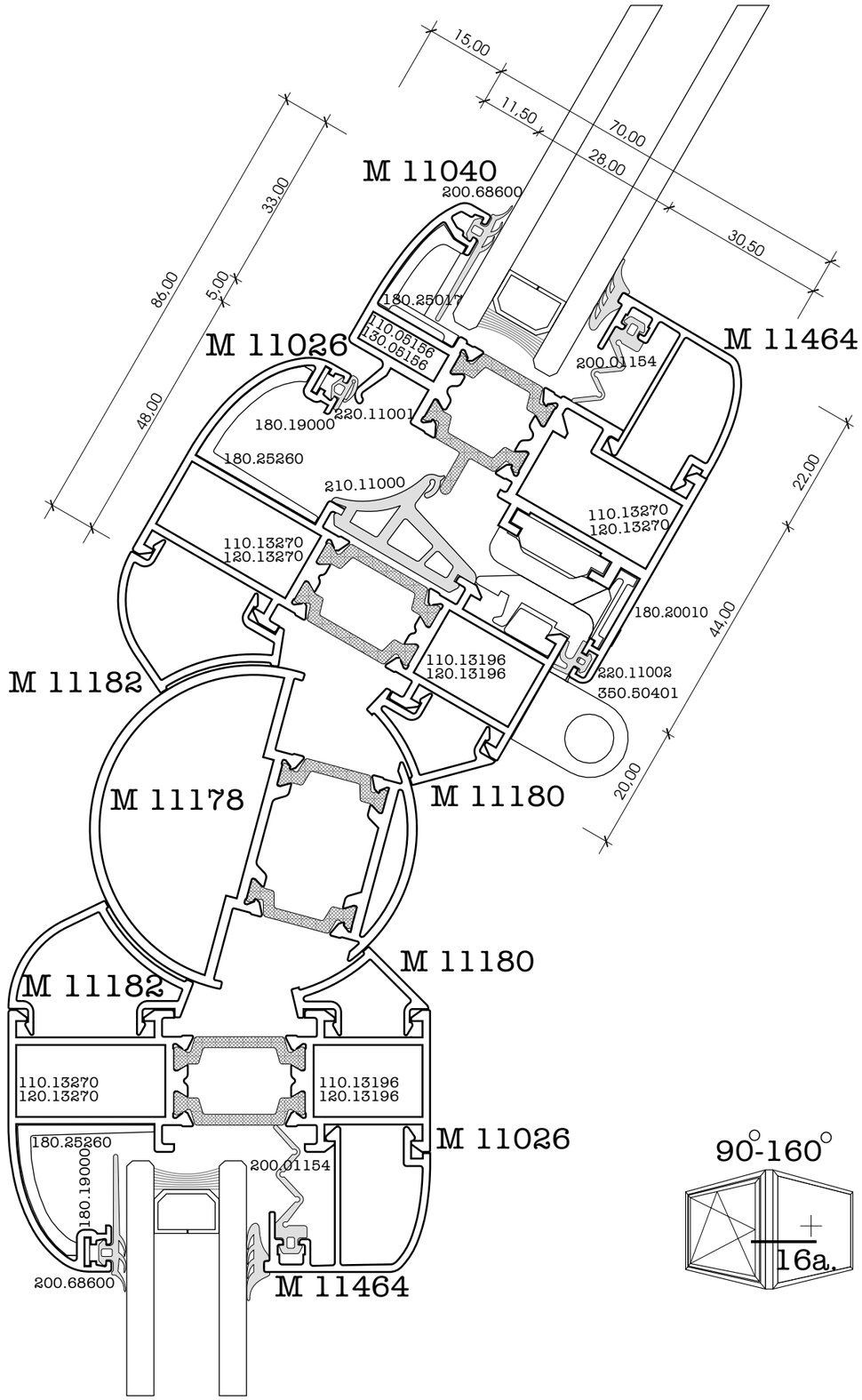
M 11040
200.68600
180.25017
110.05156
130.05156
M 11026
M 11464
200.01154
220.11001
180.19000
180.25260
210.11000
110.13270
120.13270
110.13270
120.13270
180.20010
110.13196
120.13196
220.11002
350.50401
M 11182
M 11178
M 11180
M 11182
M 11180
110.13270
120.13270
110.13196
120.13196
M 11026
180.25260
180.19000
200.01154
200.68600
M 11464
15,00
11,50
70,00
28,00
30,50
33,00
5,00
86,00
48,00
22,00
44,00
20,00

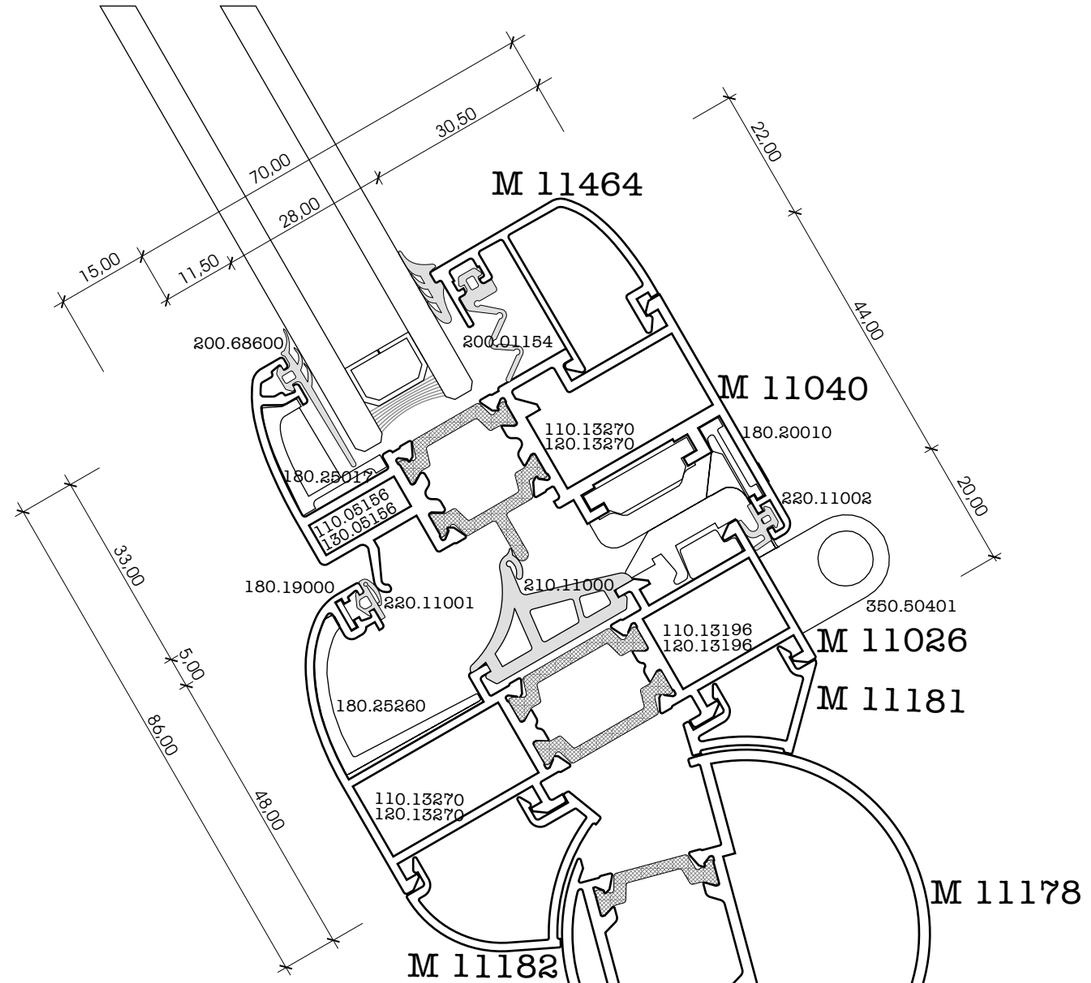
M 11464
200.68600
200.01154
M 11040
110.13270
120.13270
180.20010
180.25012
110.05156
130.05156
220.11002
180.19000
220.11001
210.11000
350.50401
110.13196
120.13196
M 11026
M 11181
180.25260
110.13270
120.13270
M 11178
M 11182
M 11182
M 11180
M 11026
110.13270
120.13270
110.13196
120.13196
180.25260
200.01154
200.68600
180.19000
M 11464
15,00
11,50
70,00
28,00
30,50
33,00
5,00
86,00
48,00
22,00
44,00
20,00

90°-160°
16a.

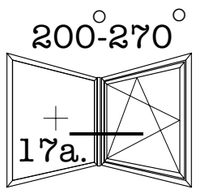
200°-270°
17a.

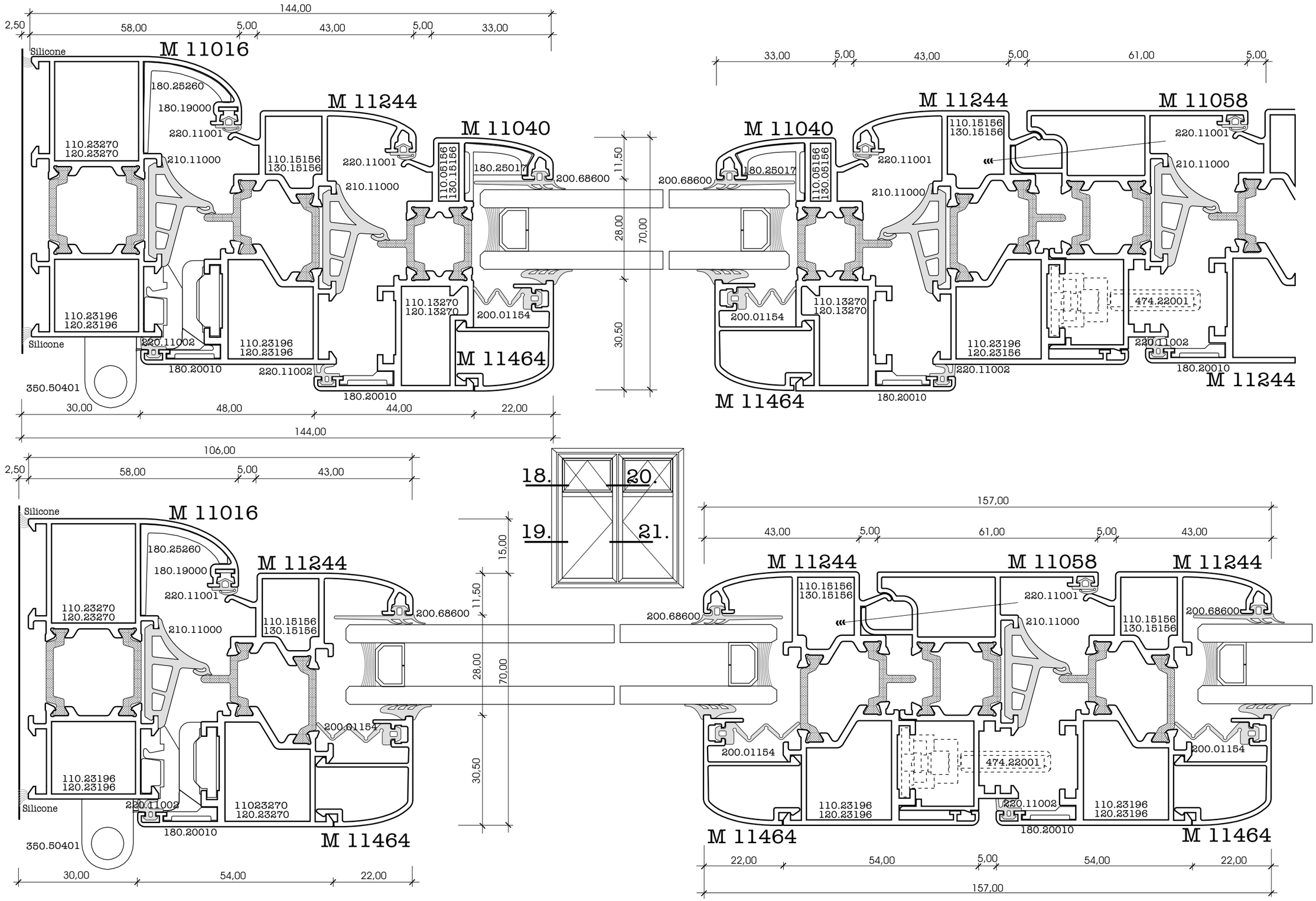
144,00
2,50
58,00
5,00
43,00
5,00
33,00
M 11016
Silicone
180.25260
180.19000
220.11001
110.23270
120.23270
210.11000
M 11244
110.15156
130.15156
220.11001
M 11040
110.05156
130.15156
180.25017
200.68600
210.11000
11,50
28,00
70,00
30,50
110.13270
120.13270
200.01154
110.23196
120.23196
Silicone
220.11002
180.20010
220.11002
110.23196
120.23196
M 11464
180.20010
350.50401
30,00
48,00
44,00
22,00
144,00
106,00
2,50
58,00
5,00
43,00
18.
20.
19.
21.
15,00
11,50
28,00
70,00
30,50
M 11016
Silicone
180.25260
180.19000
220.11001
110.23270
120.23270
210.11000
M 11244
110.15156
130.15156
200.68600
110.23196
120.23196
Silicone
220.11002
11023270
120.23270
180.20010
200.01154
M 11464
350.50401
30,00
54,00
22,00
33,00
5,00
43,00
5,00
61,00
5,00
M 11244
M 11040
180.25017
200.68600
110.05156
130.05156
220.11001
110.15156
130.15156
210.11000
M 11058
220.11001
210.11000
110.15156
130.15156
200.68600
110.13270
120.13270
200.01154
474.22001
110.23196
120.23156
220.11002
220.11002
180.20010
M 11244
M 11464
180.20010
157,00
43,00
5,00
61,00
5,00
43,00
M 11244
M 11058
M 11244
110.15156
130.15156
220.11001
210.11000
110.15156
130.15156
200.68600
200.68600
200.01154
474.22001
200.01154
110.23196
120.23196
220.11002
110.23196
120.23196
M 11464
180.20010
M 11464
22,00
54,00
5,00
54,00
22,00
157,00

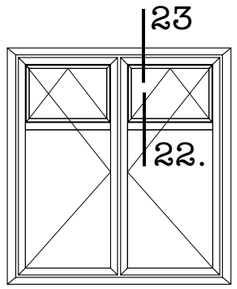
23
22.

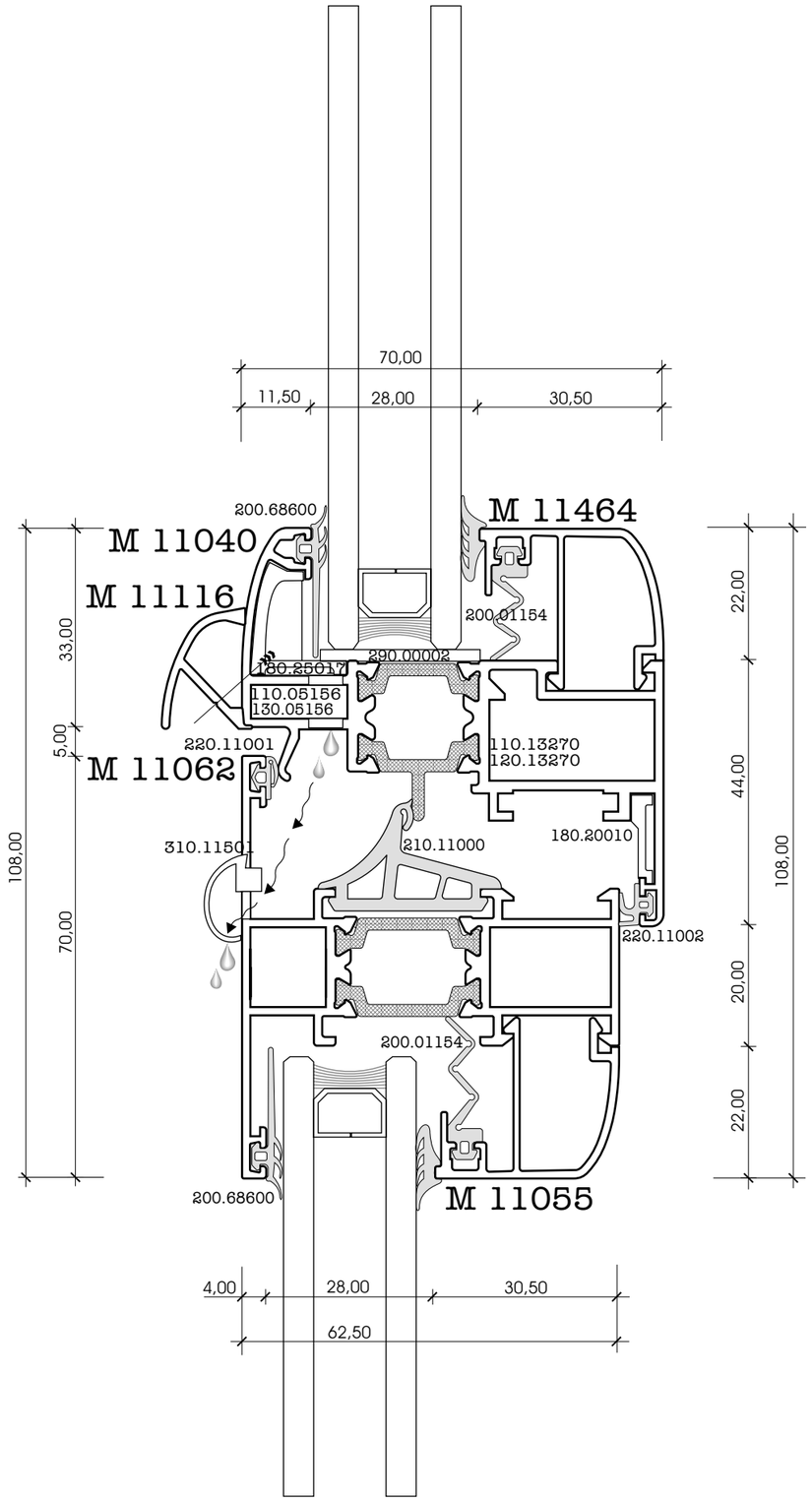
70,00
11,50
28,00
30,50
200.68600
M 11040
M 11116
M 11464
200.01154
180.25017
290.00002
110.05156
130.05156
220.11001
M 11062
110.13270
120.13270
310.11501
210.11000
180.20010
220.11002
200.01154
200.68600
M 11055
4,00
28,00
30,50
62,50
33,00
5,00
70,00
108,00
22,00
44,00
20,00
22,00
108,00

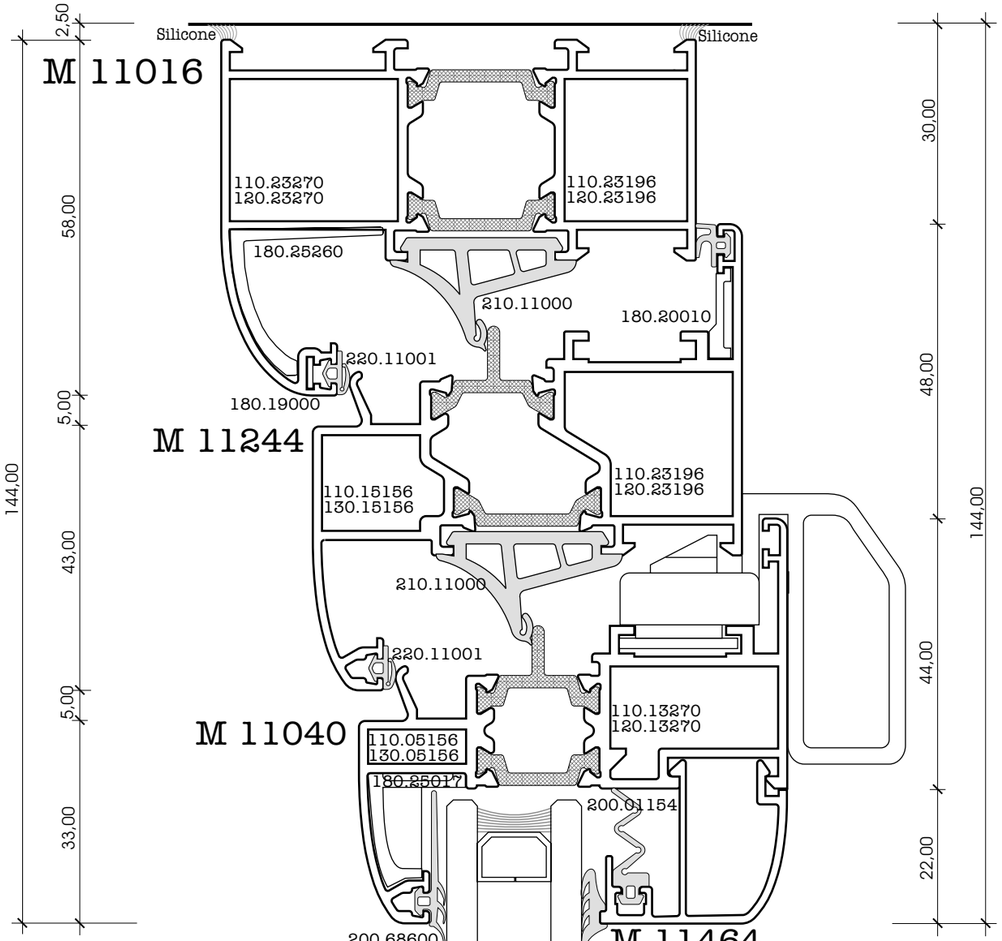
2,50
Silicone
Silicone
M 11016
110.23270
120.23270
110.23196
120.23196
180.25260
210.11000
180.20010
220.11001
180.19000
M 11244
110.15156
130.15156
110.23196
120.23196
210.11000
220.11001
M 11040
110.13270
120.13270
110.05156
130.05156
180.25017
200.01154
200.68600
M 11464
11,50
28,00
30,50
70,00
144,00
58,00
5,00
43,00
5,00
33,00
30,00
48,00
44,00
22,00
144,00

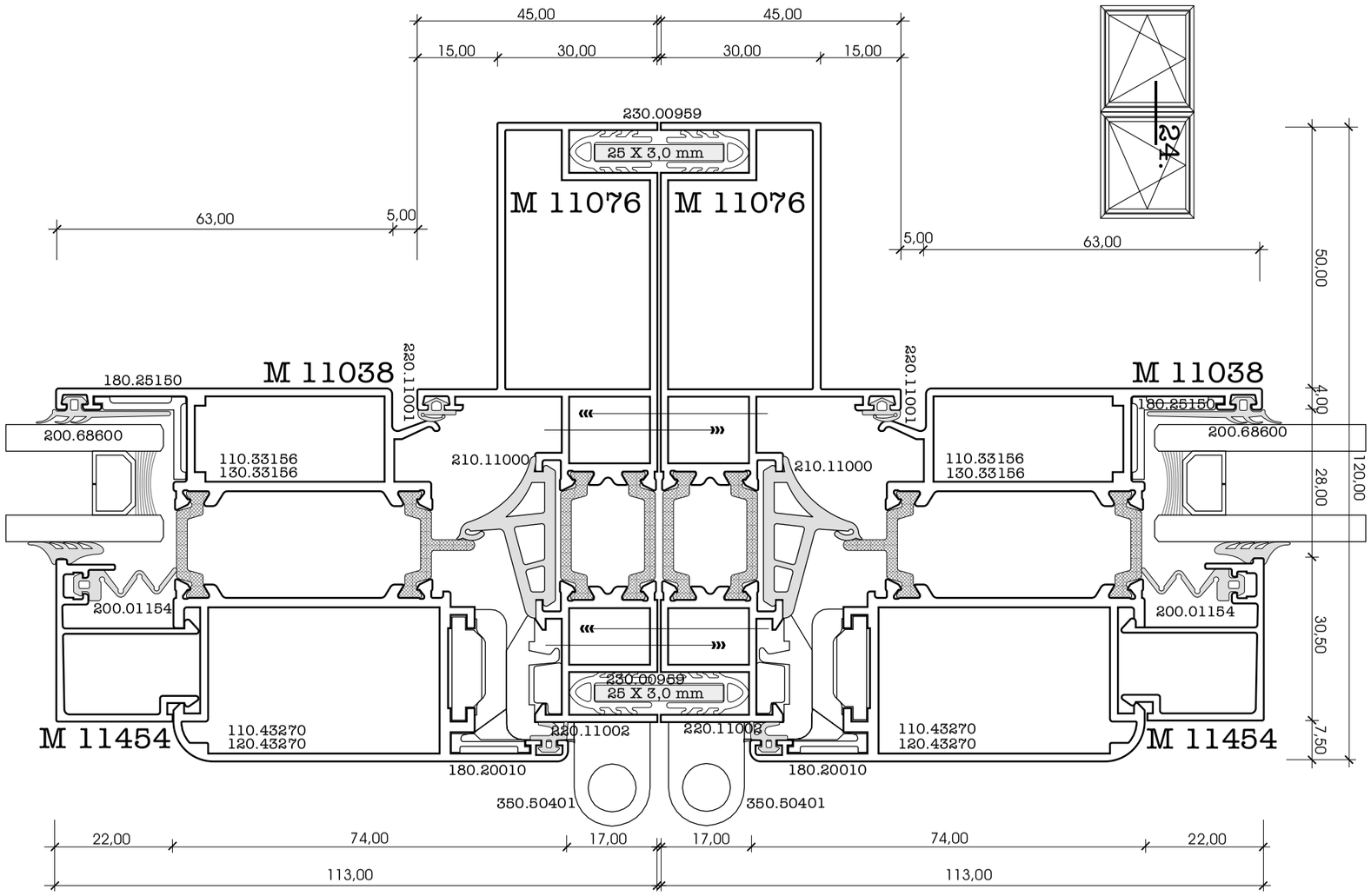
45,00
45,00
15,00
30,00
30,00
15,00
230.00959
25 X 3,0 mm
M 11076
M 11076
24.
63,00
5,00
5,00
63,00
50,00
4,00
28,00
30,50
7,50
120,00
M 11038
M 11038
180.25150
180.25150
220.11001
220.11001
200.68600
200.68600
110.33156
130.33156
210.11000
210.11000
110.33156
130.33156
200.01154
200.01154
230.00959
25 X 3,0 mm
M 11454
M 11454
110.43270
120.43270
220.11002
220.11002
110.43270
120.43270
180.20010
180.20010
350.50401
350.50401
22,00
74,00
17,00
17,00
74,00
22,00
113,00
113,00

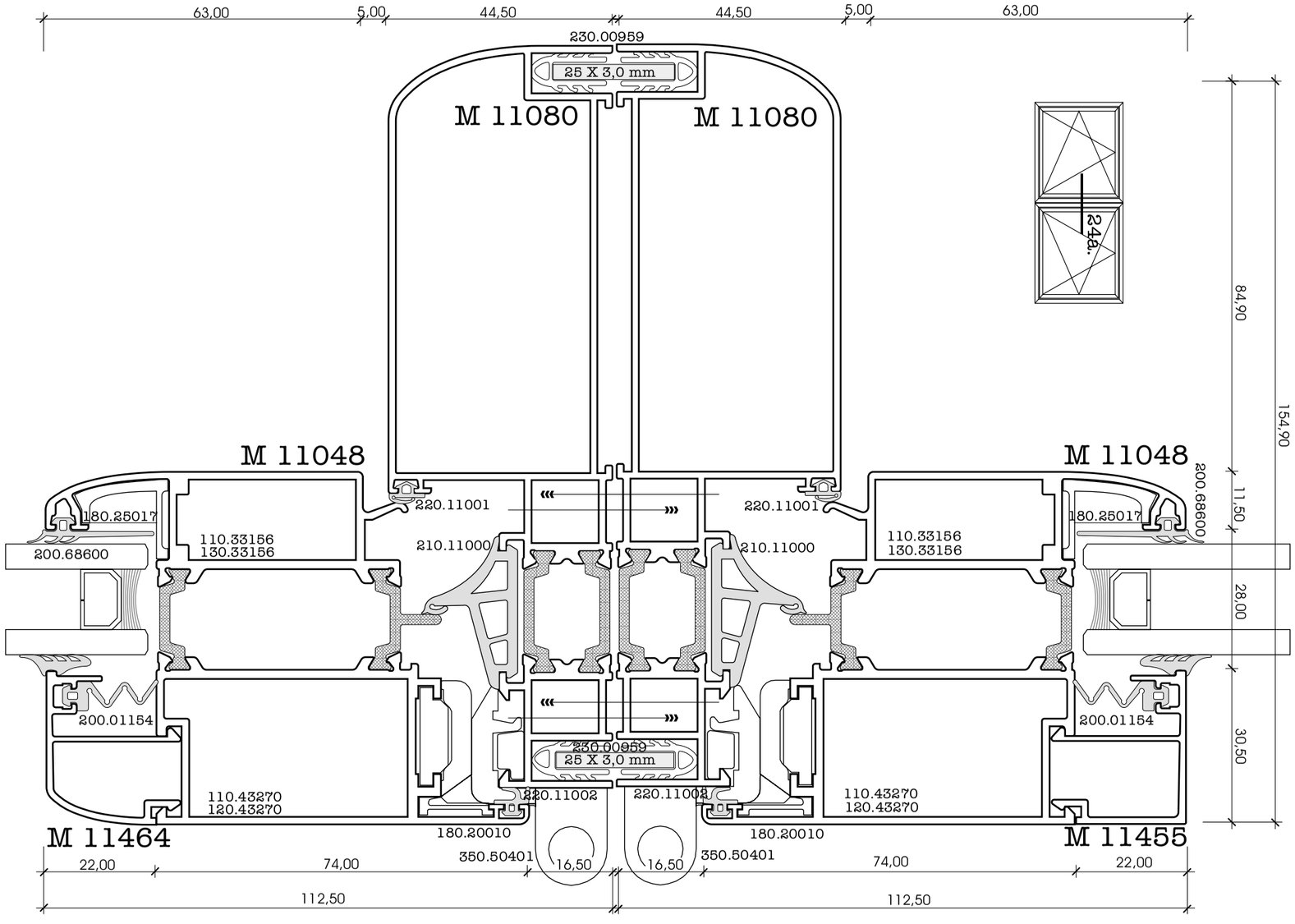
63,00
5,00
44,50
44,50
5,00
63,00
230.00959
25 X 3,0 mm
M 11080
M 11080
24.
84,90
11,50
28,00
30,50
154,90
M 11048
M 11048
200.68600
180.25017
180.25017
220.11001
220.11001
200.68600
110.33156
130.33156
210.11000
210.11000
110.33156
130.33156
200.01154
200.01154
230.00959
25 X 3,0 mm
M 11464
M 11455
110.43270
120.43270
220.11002
220.11002
110.43270
120.43270
180.20010
180.20010
350.50401
350.50401
22,00
74,00
16,50
16,50
74,00
22,00
112,50
112,50

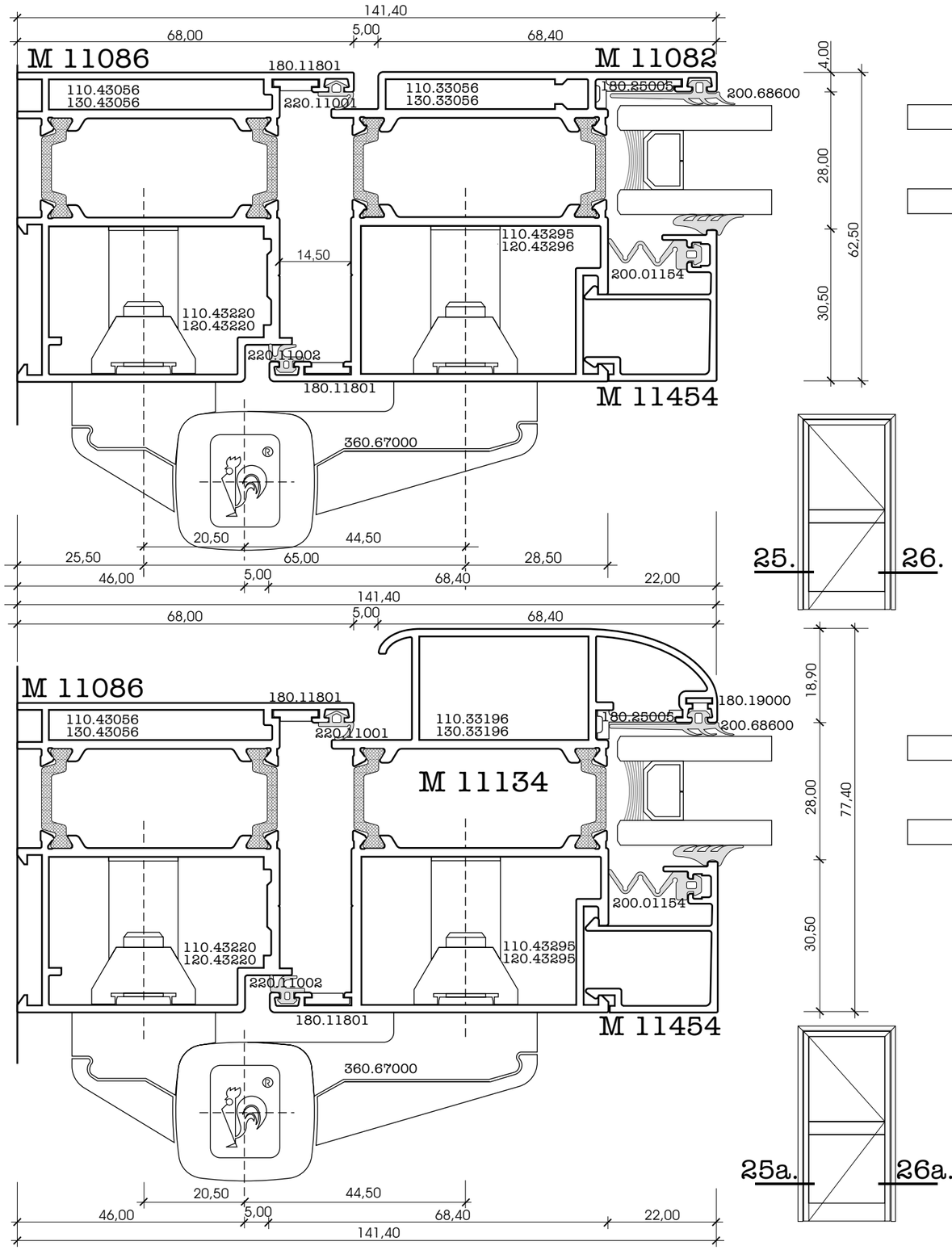
141,40
68,00
5,00
68,40
M 11086
180.11801
110.43056
130.43056
220.11001
110.33056
130.33056
M 11082
180.25005
200.68600
110.43295
120.43296
14,50
200.01154
110.43220
120.43220
220.11002
180.11801
M 11454
360.67000
20,50
44,50
25,50
65,00
28,50
46,00
5,00
68,40
22,00
141,40
68,00
5,00
68,40
M 11086
180.11801
110.43056
130.43056
220.11001
110.33196
130.33196
M 11134
180.19000
180.25005
200.68600
110.43295
120.43295
200.01154
110.43220
120.43220
220.11002
180.11801
M 11454
360.67000
20,50
44,50
46,00
5,00
68,40
22,00
141,40

4,00
28,00
62,50
30,50
25.
26.
18,90
28,00
77,40
30,50
25a.
26a.

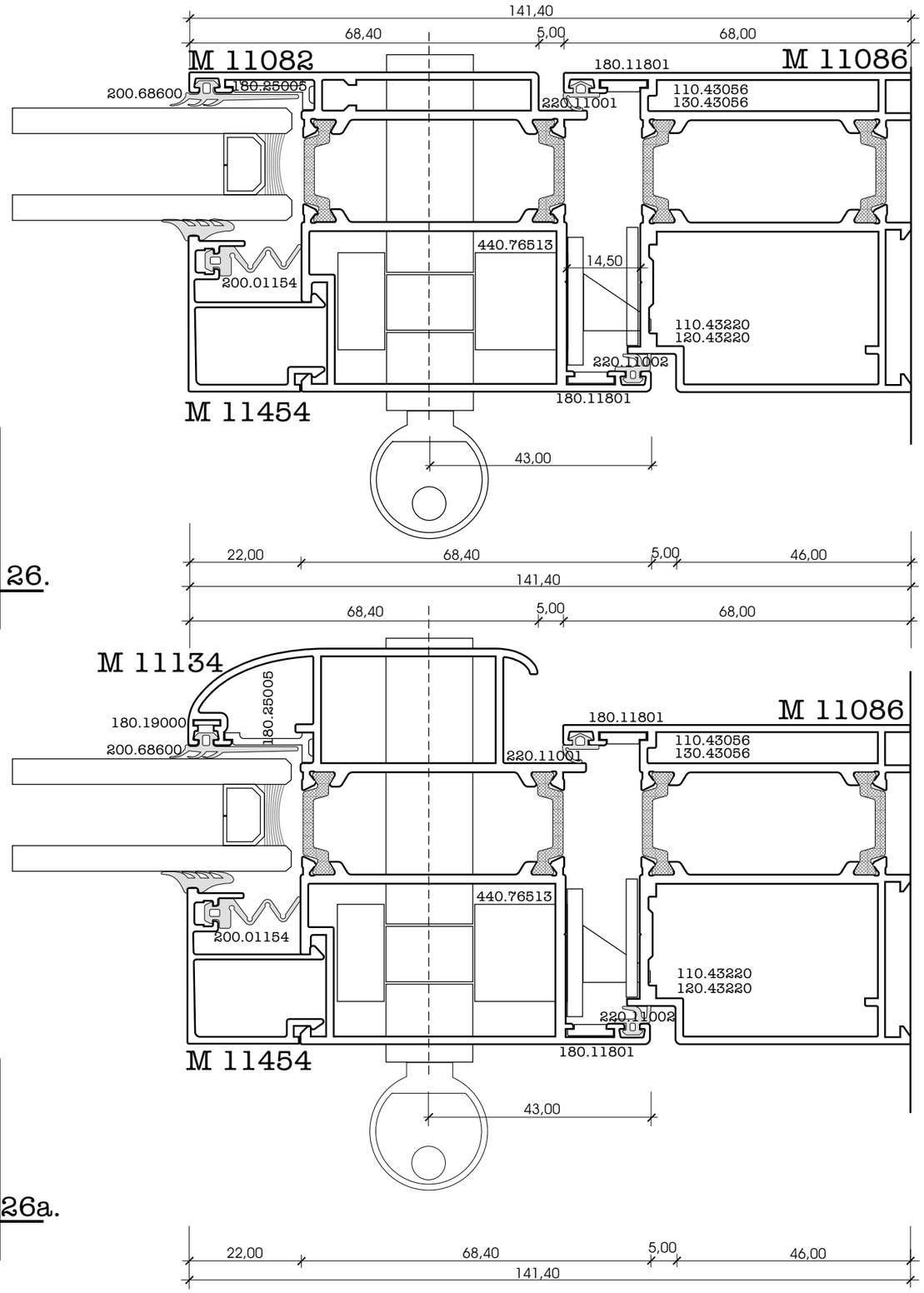
141,40
68,40
5,00
68,00
M 11082
180.11801
M 11086
200.68600
180.25005
220.11001
110.43056
130.43056
440.76513
14,50
200.01154
110.43220
120.43220
220.11002
180.11801
M 11454
43,00
22,00
68,40
5,00
46,00
141,40
68,40
5,00
68,00
M 11134
180.25005
180.19000
200.68600
180.11801
M 11086
220.11001
110.43056
130.43056
440.76513
200.01154
110.43220
120.43220
220.11002
180.11801
M 11454
43,00
22,00
68,40
5,00
46,00
141,40

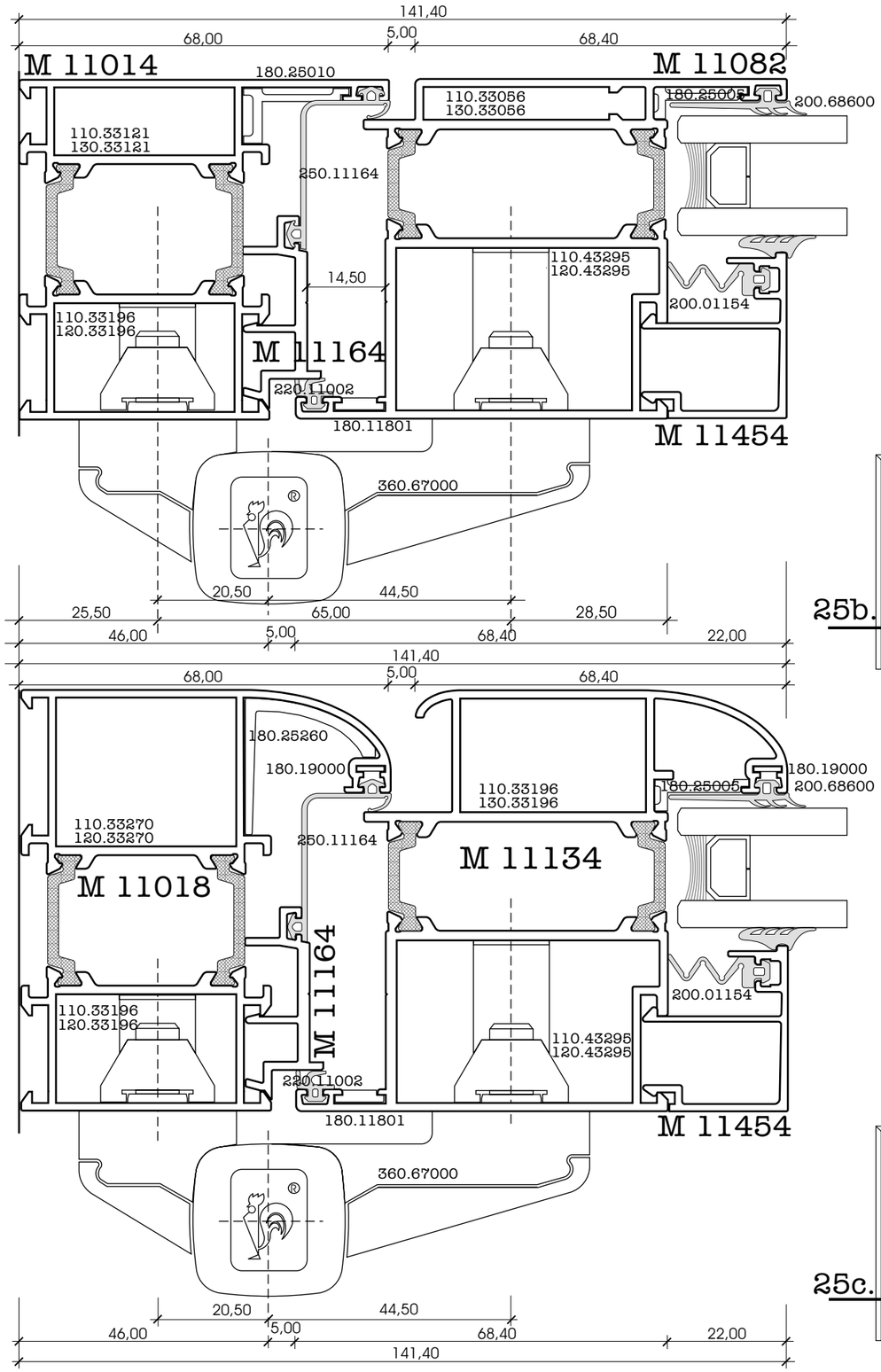
141,40
68,00
5,00
68,40
M 11014
180.25010
M 11082
110.33056
130.33056
180.25005
200.68600
110.33121
130.33121
250.11164
110.43295
120.43295
14,50
200.01154
110.33196
120.33196
M 11164
220.11002
180.11801
M 11454
360.67000
20,50
44,50
25,50
65,00
28,50
46,00
5,00
68,40
22,00
141,40
68,00
5,00
68,40
180.25260
180.19000
110.33196
130.33196
180.19000
180.25005
200.68600
110.33270
120.33270
250.11164
M 11134
M 11018
M 11164
110.33196
120.33196
110.43295
120.43295
200.01154
220.11002
180.11801
M 11454
360.67000
20,50
44,50
46,00
5,00
68,40
22,00
141,40

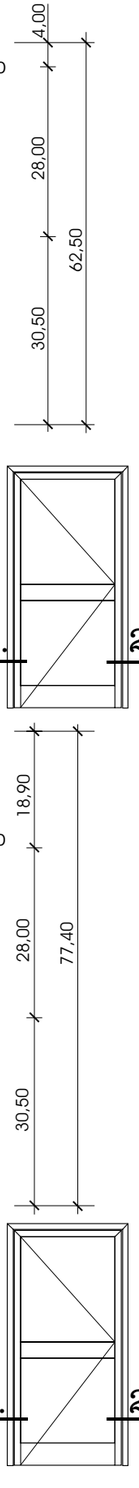
4,00
28,00
62,50
30,50
25b.
26b.
18,90
28,00
77,40
30,50
25c.
26c.

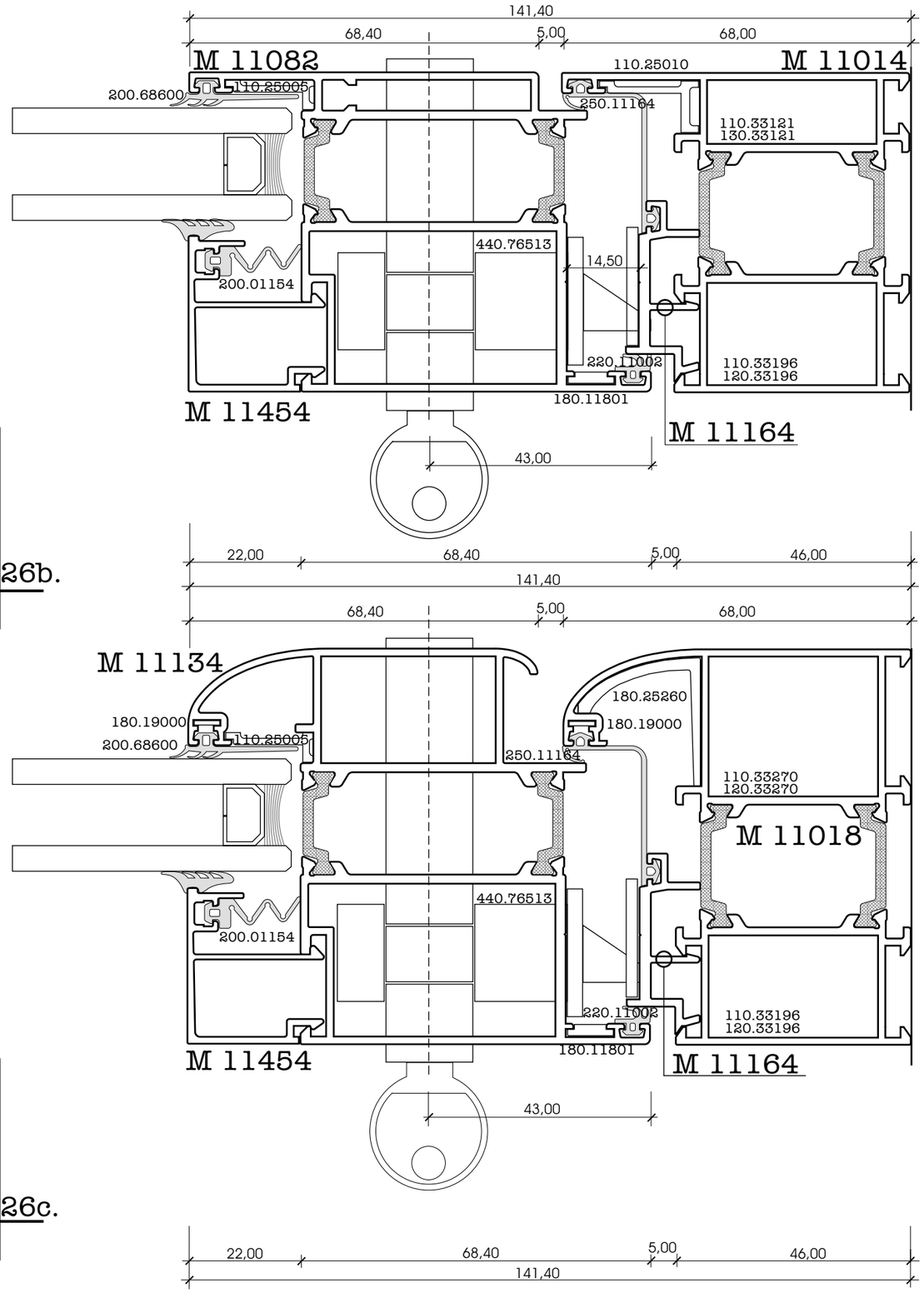
141,40
68,40
5,00
68,00
M 11082
110.25010
M 11014
200.68600
110.25005
250.11164
110.33121
130.33121
440.76513
14,50
200.01154
220.11002
110.33196
120.33196
180.11801
M 11454
M 11164
43,00
22,00
68,40
5,00
46,00
141,40
68,40
5,00
68,00
M 11134
180.25260
180.19000
180.19000
200.68600
110.25005
250.11164
110.33270
120.33270
M 11018
440.76513
200.01154
220.11002
110.33196
120.33196
180.11801
M 11454
M 11164
43,00
22,00
68,40
5,00
46,00
141,40

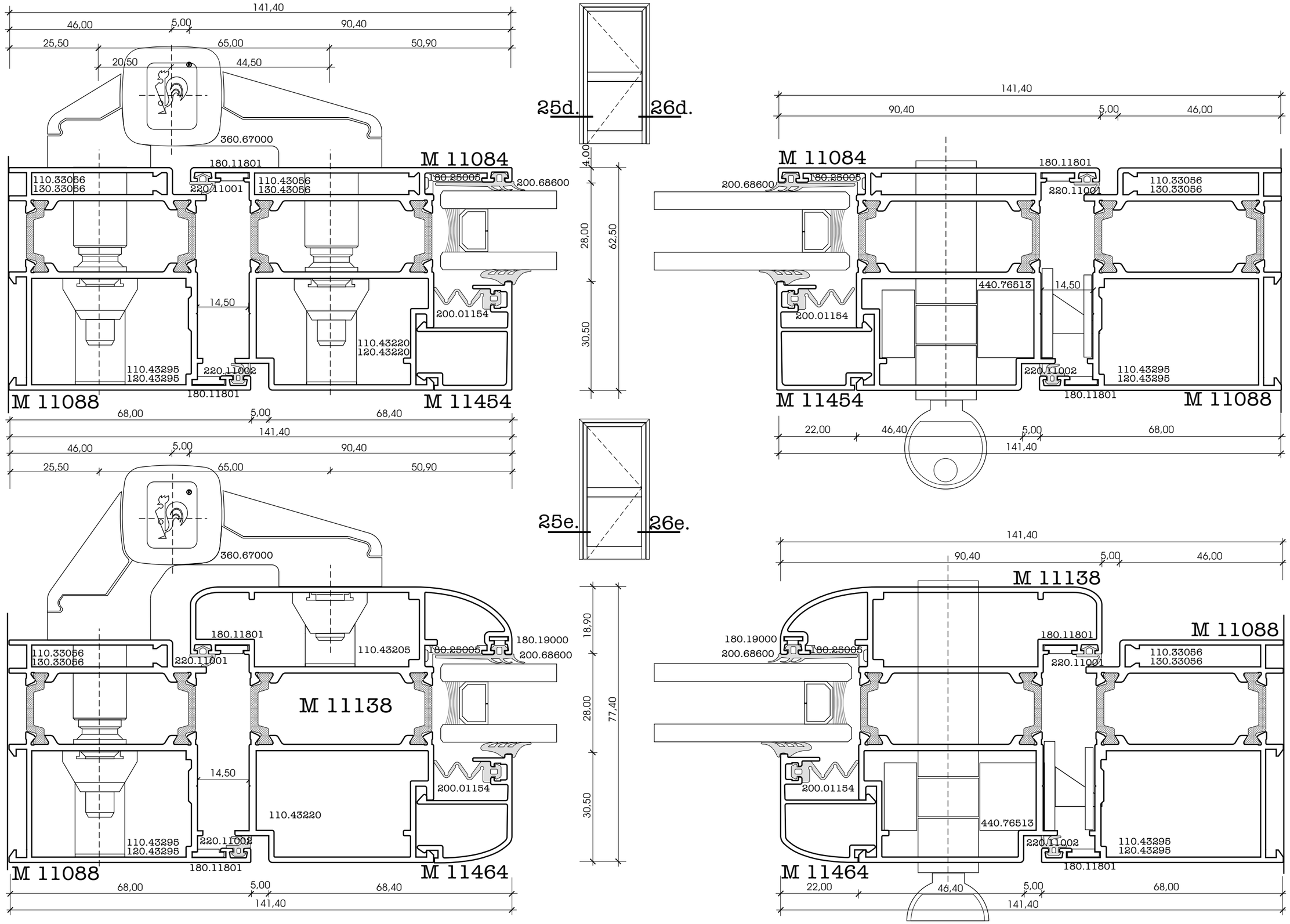
25d.
26d.
25e.
26e.
M 11084
M 11088
M 11454
M 11138
M 11464
141,40
46,00
5,00
90,40
25,50
65,00
50,90
20,50
44,50
360.67000
180.11801
110.33056
130.33056
220.11001
110.43056
130.43056
180.25005
200.68600
14,50
200.01154
110.43220
120.43220
110.43295
120.43295
220.11002
68,00
68,40
4,00
28,00
62,50
30,50
18,90
77,40
22,00
46,40
440.76513
180.19000
110.43205

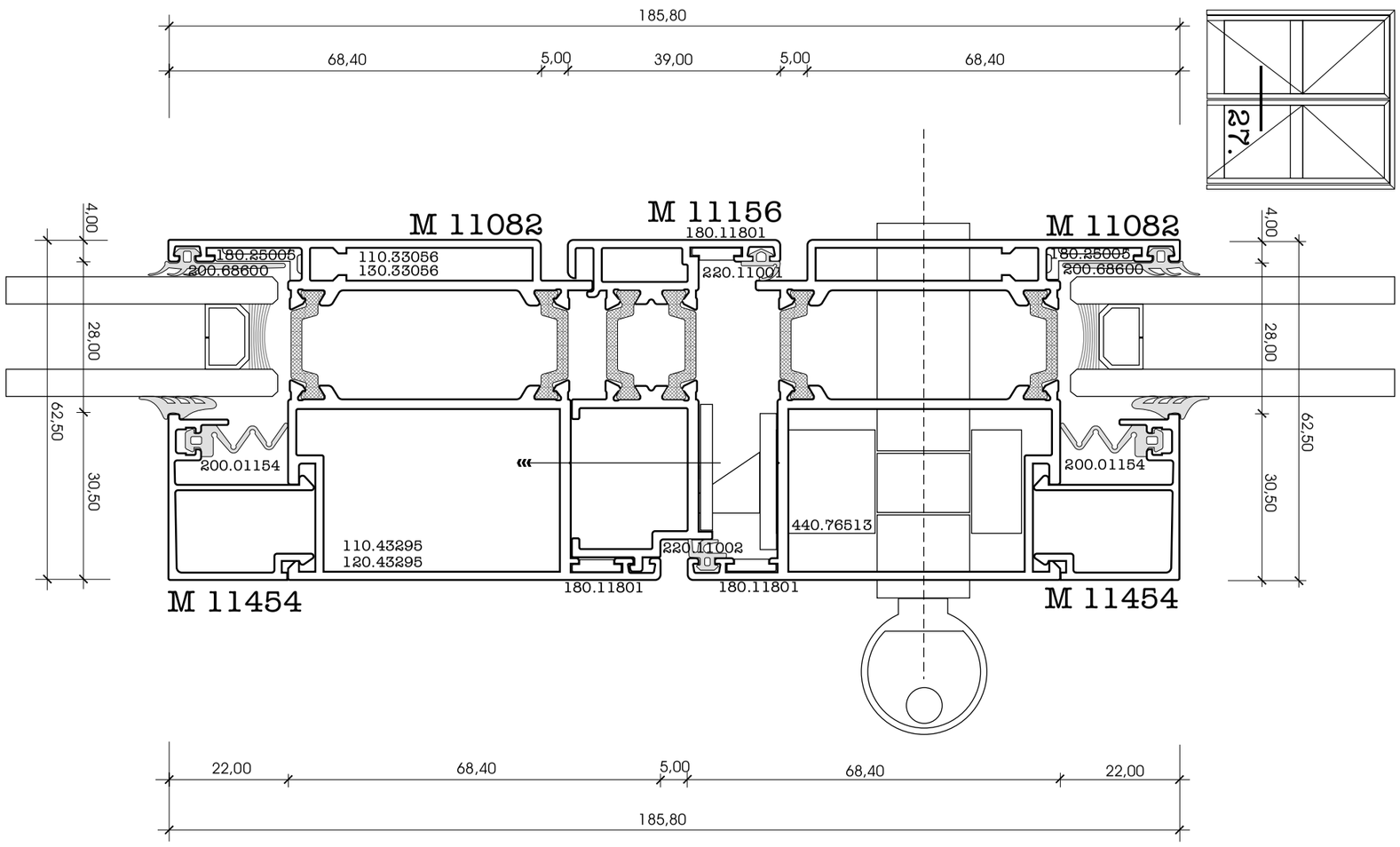
185,80
68,40
5,00
39,00
5,00
68,40
27.
M 11082
M 11156
180.11801
M 11082
180.25005
200.68600
110.33056
130.33056
220.11001
180.25005
200.68600
4,00
28,00
62,50
30,50
200.01154
200.01154
110.43295
120.43295
440.76513
220.11002
180.11801
180.11801
M 11454
M 11454
22,00
68,40
5,00
68,40
22,00
185,80

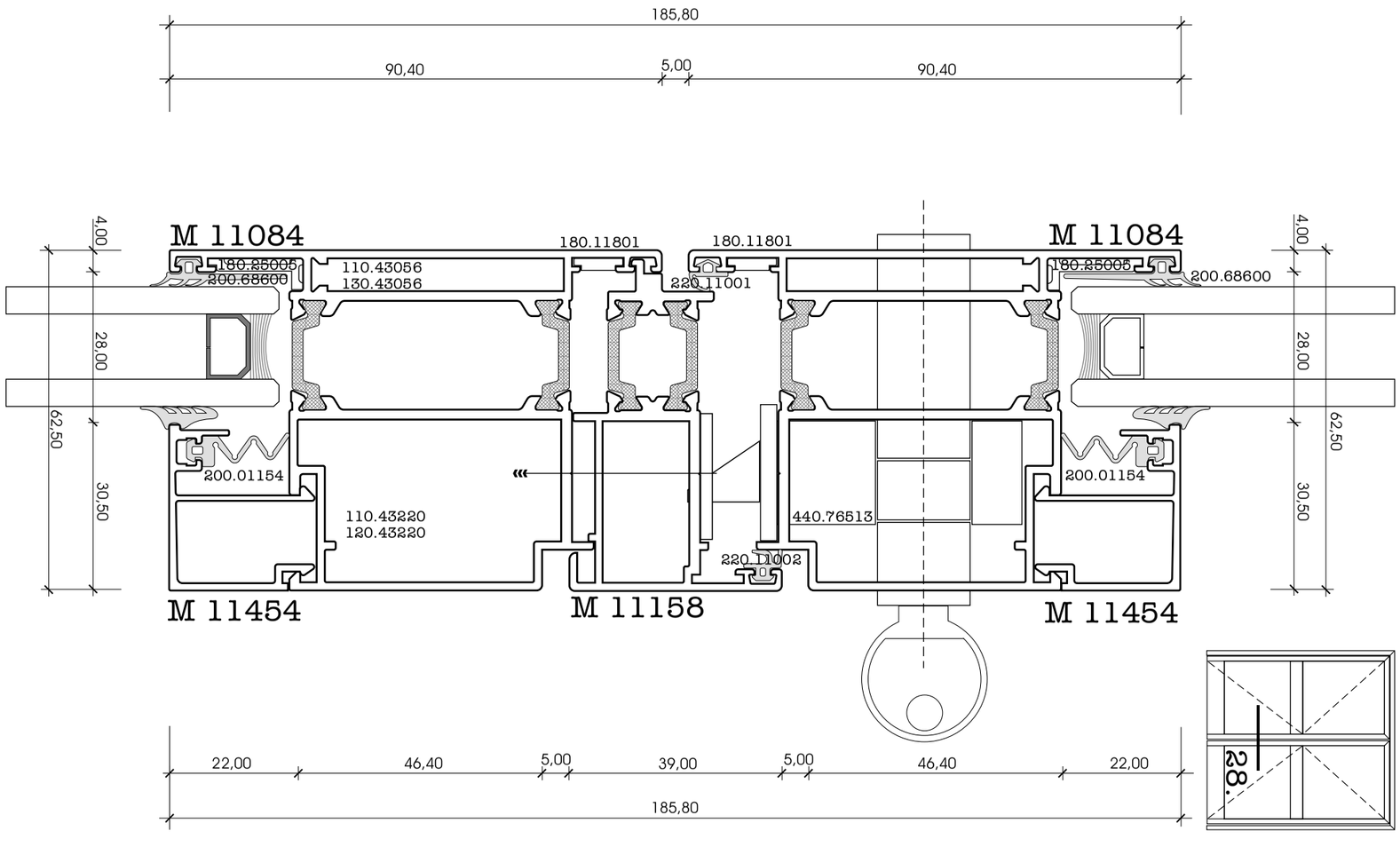
185,80
90,40
5,00
90,40
M 11084
180.11801
180.11801
M 11084
180.25005
200.68600
110.43056
130.43056
220.11001
180.25005
200.68600
4,00
28,00
62,50
30,50
200.01154
200.01154
110.43220
120.43220
440.76513
220.11002
M 11454
M 11158
M 11454
22,00
46,40
5,00
39,00
5,00
46,40
22,00
185,80
28.

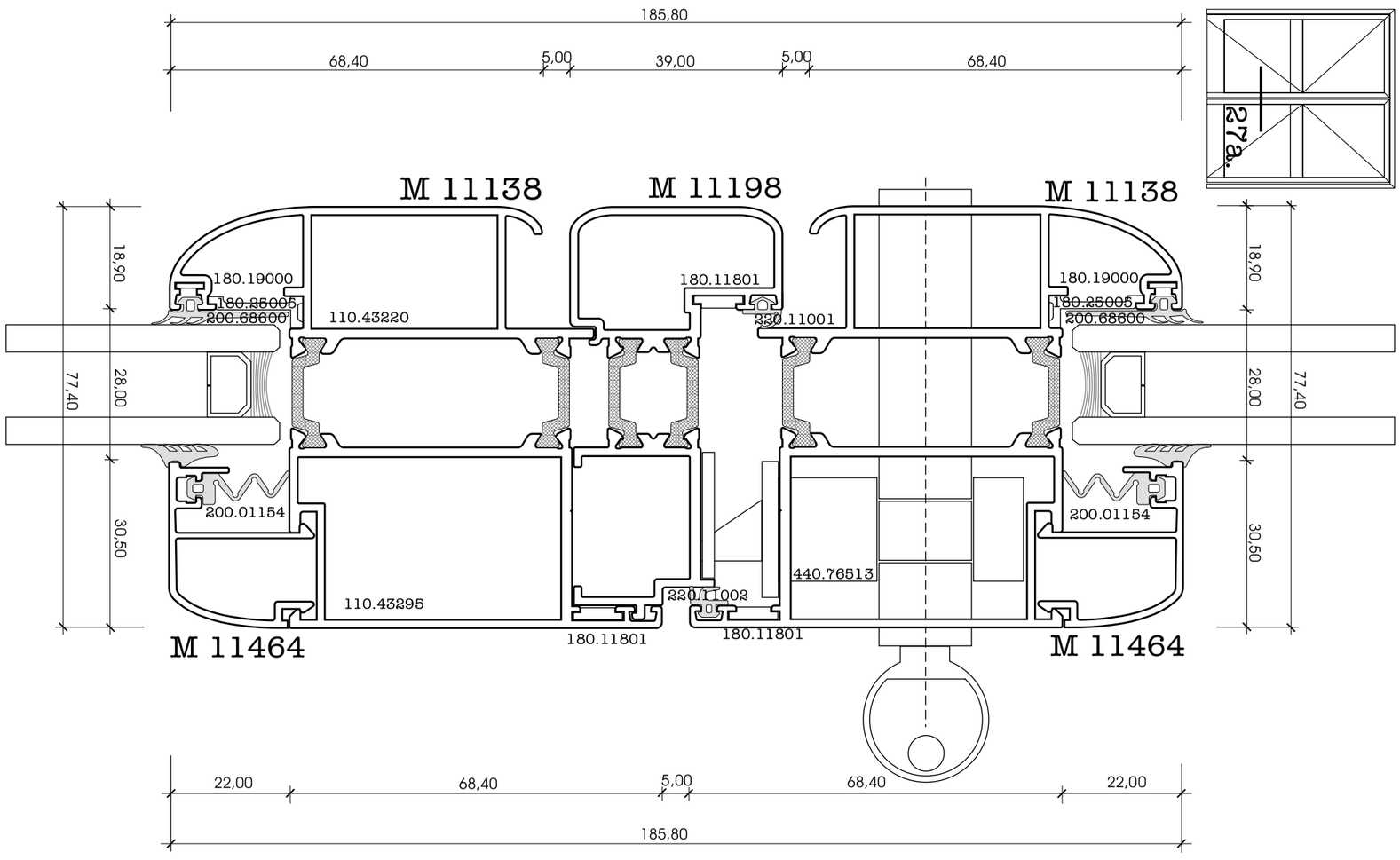
185,80
68,40
5,00
39,00
5,00
68,40
27a.
M 11138
M 11198
M 11138
18,90
77,40
28,00
30,50
180.19000
180.25005
200.68600
110.43220
180.11801
220.11001
200.01154
440.76513
110.43295
220.11002
M 11464
M 11464
22,00
68,40
5,00
68,40
22,00
185,80

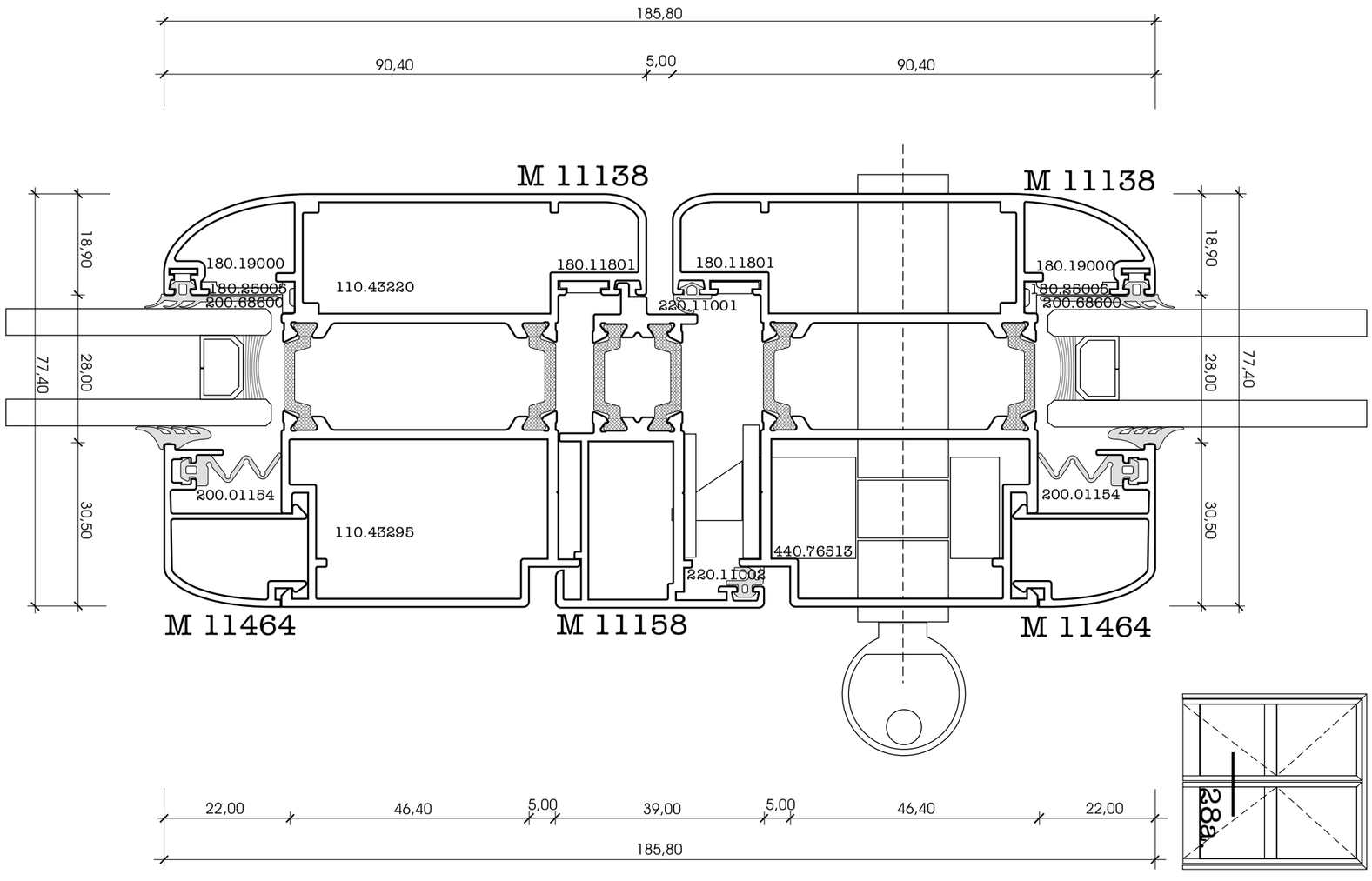
185,80
90,40
5,00
90,40
M 11138
M 11138
18,90
77,40
28,00
30,50
180.19000
180.25005
200.68600
110.43220
180.11801
220.11001
200.01154
110.43295
440.76513
220.11002
M 11464
M 11158
M 11464
22,00
46,40
5,00
39,00
5,00
46,40
22,00
185,80
28a.

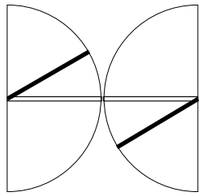

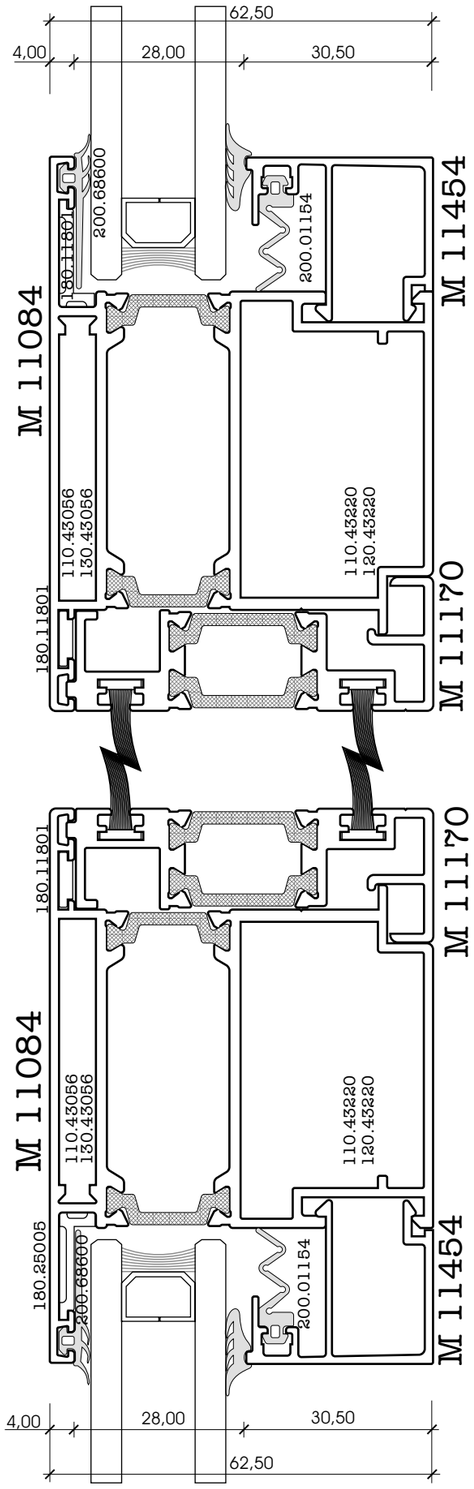
62,50
4,00
28,00
30,50
200.68600
180.11801
200.01154
M 11454
M 11084
110.43056
130.43056
110.43220
120.43220
M 11170
180.11801
M 11170
180.11801
M 11084
110.43056
130.43056
110.43220
120.43220
180.25005
200.68600
200.01154
M 11454
4,00
28,00
30,50
62,50

196,80
90,40
16,00
90,40
22,00
46,40
22,00
16,00
22,00
46,40
22,00
196,80

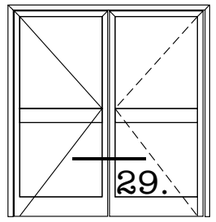
29.

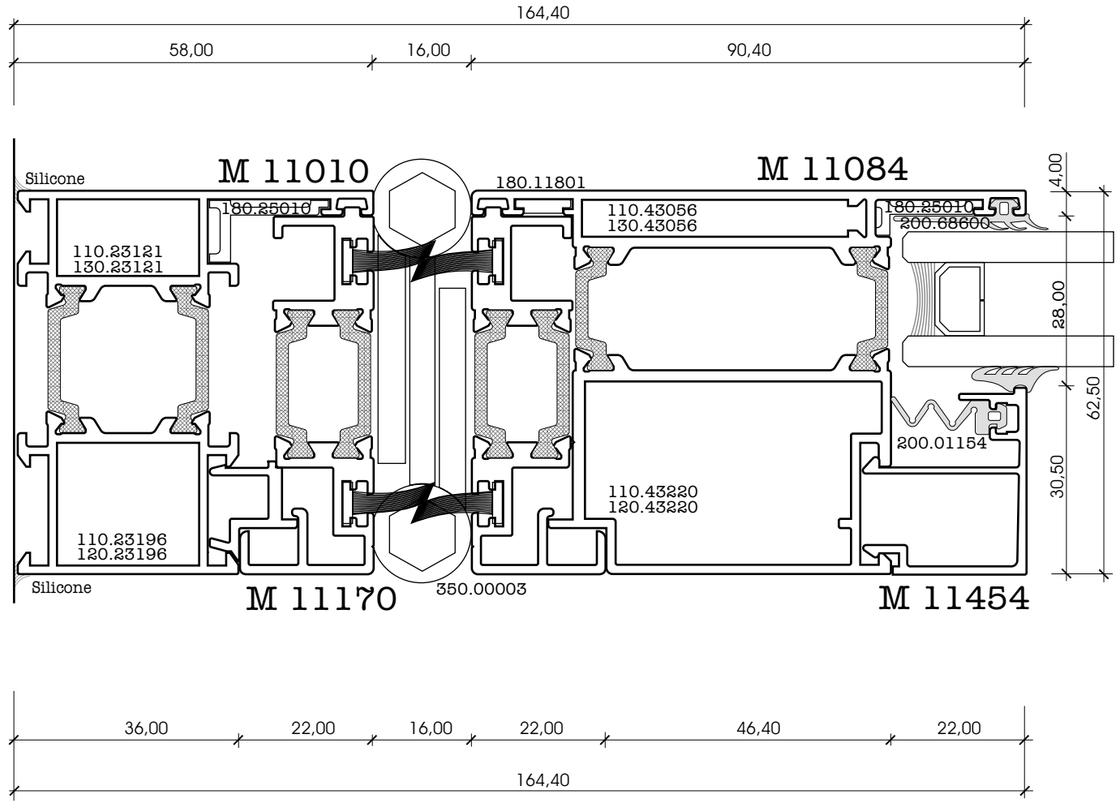
164,40
58,00
16,00
90,40
Silicone
M 11010
180.11801
M 11084
180.25010
110.43056
130.43056
180.25010
200.68600
110.23121
130.23121
4,00
28,00
62,50
30,50
200.01154
110.43220
120.43220
110.23196
120.23196
Silicone
M 11170
350.00003
M 11454
36,00
22,00
16,00
22,00
46,40
22,00
164,40

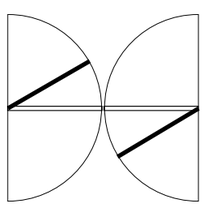

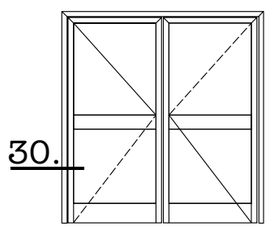
30.

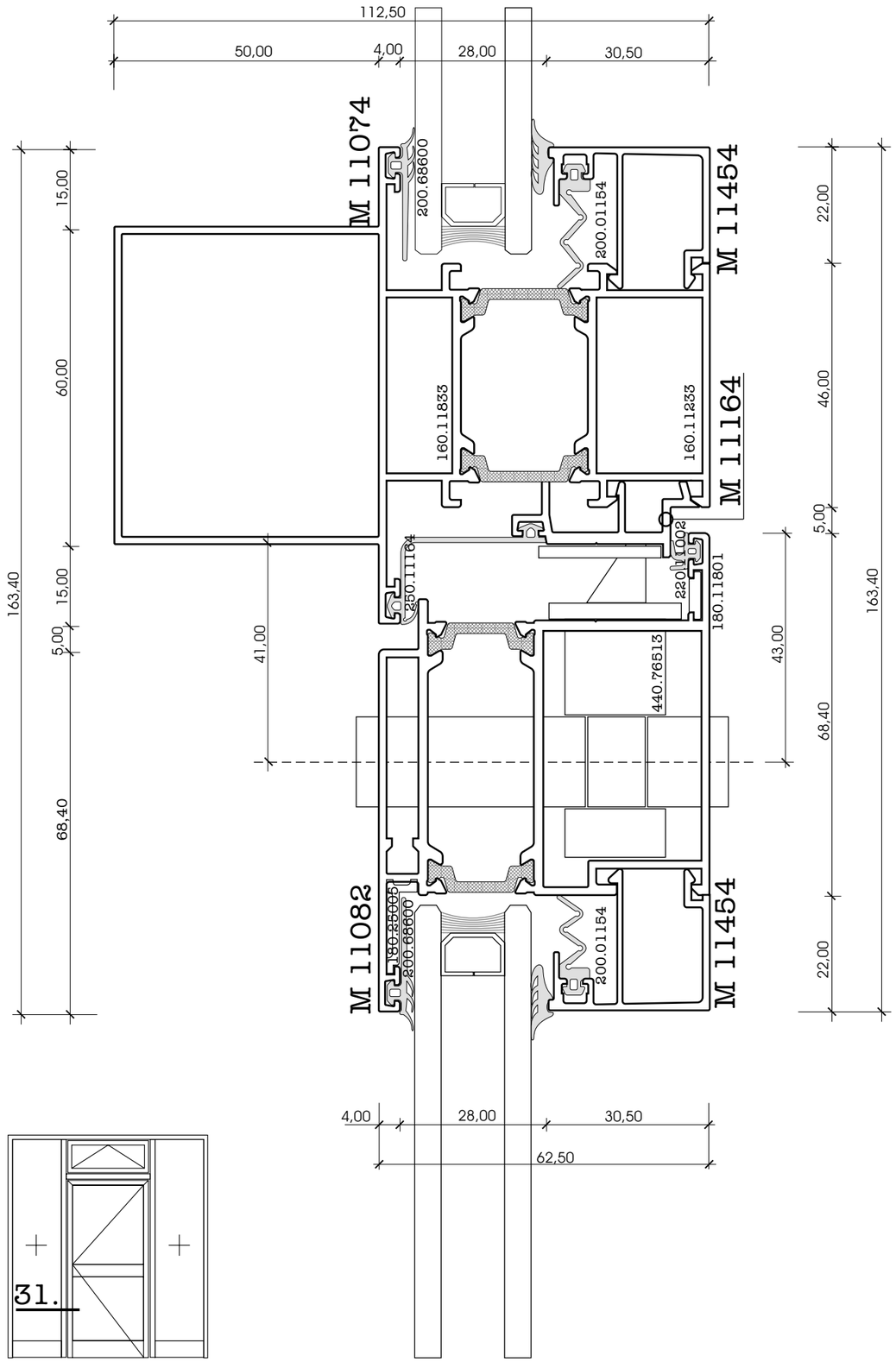
112,50
50,00
4,00
28,00
30,50
M 11074
M 11454
M 11164
M 11082
200.68600
200.01154
160.11833
160.11235
250.11164
220.11002
180.11801
440.76513
180.25006
163,40
15,00
60,00
5,00
68,40
41,00
43,00
46,00
22,00
62,50

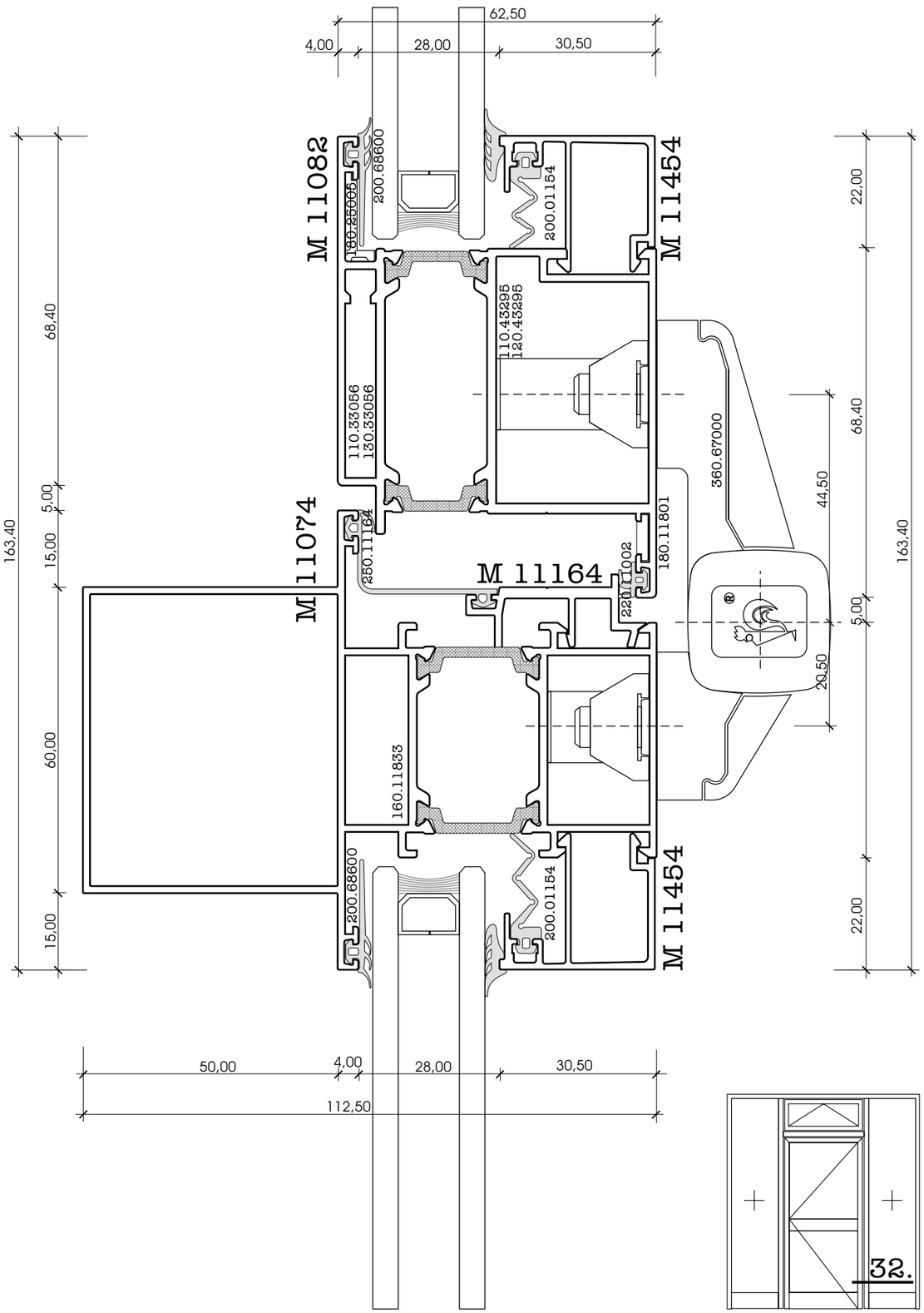
62,50
4,00
28,00
30,50
M 11082
M 11454
M 11074
M 11164
200.68600
200.01154
180.25006
110.43295
120.43295
110.33056
130.33056
360.67000
250.11164
220.11002
180.11801
160.11833
163,40
68,40
60,00
15,00
5,00
44,50
29,50
22,00
50,00
112,50

31.

32.

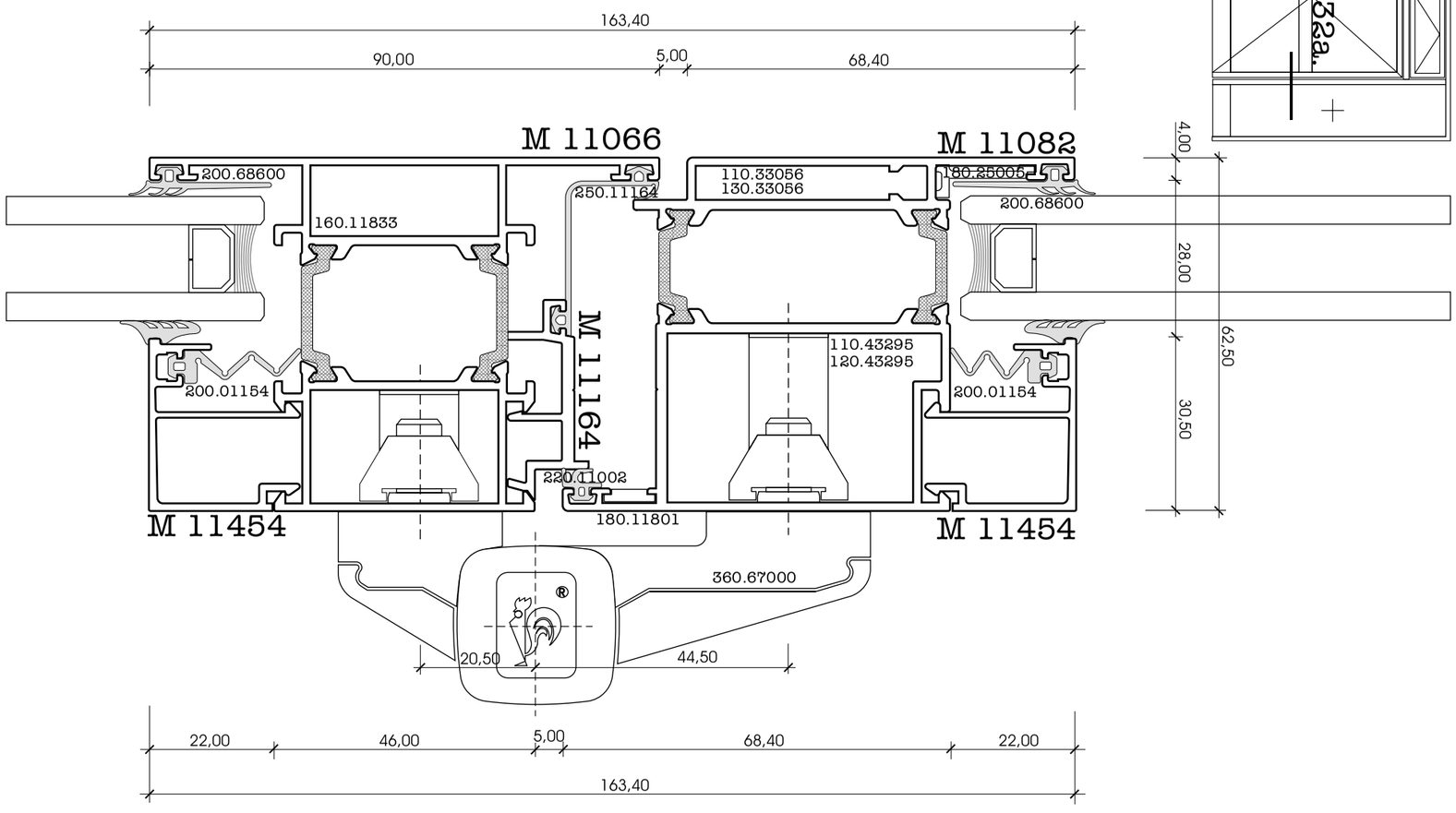
163,40
90,00
5,00
68,40
M 11066
M 11082
200.68600
160.11833
250.11164
110.33056
130.33056
180.25005
200.68600
4,00
28,00
62,50
30,50
M 11164
110.43295
120.43295
200.01154
200.01154
220.11002
180.11801
M 11454
M 11454
360.67000
20,50
44,50
22,00
46,00
5,00
68,40
22,00
163,40
32a.

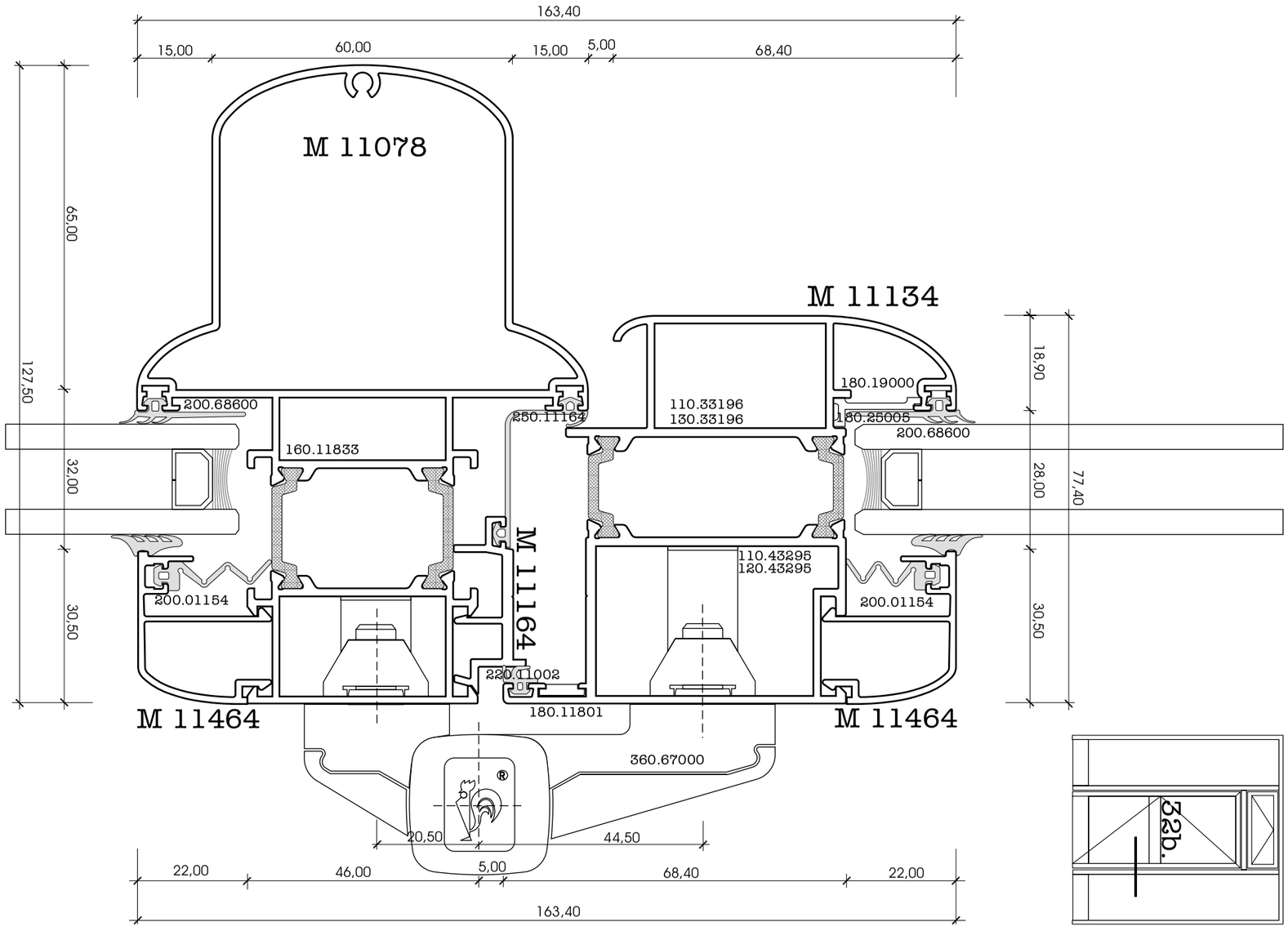
163,40
15,00
60,00
15,00
5,00
68,40
M 11078
M 11134
65,00
127,50
32,00
30,50
200.68600
160.11833
250.11164
110.33196
130.33196
180.19000
180.25005
200.68600
18,90
28,00
77,40
30,50
M 11164
110.43295
120.43295
200.01154
200.01154
220.11002
180.11801
M 11464
M 11464
360.67000
20,50
44,50
22,00
46,00
5,00
68,40
22,00
163,40
32b.

33.

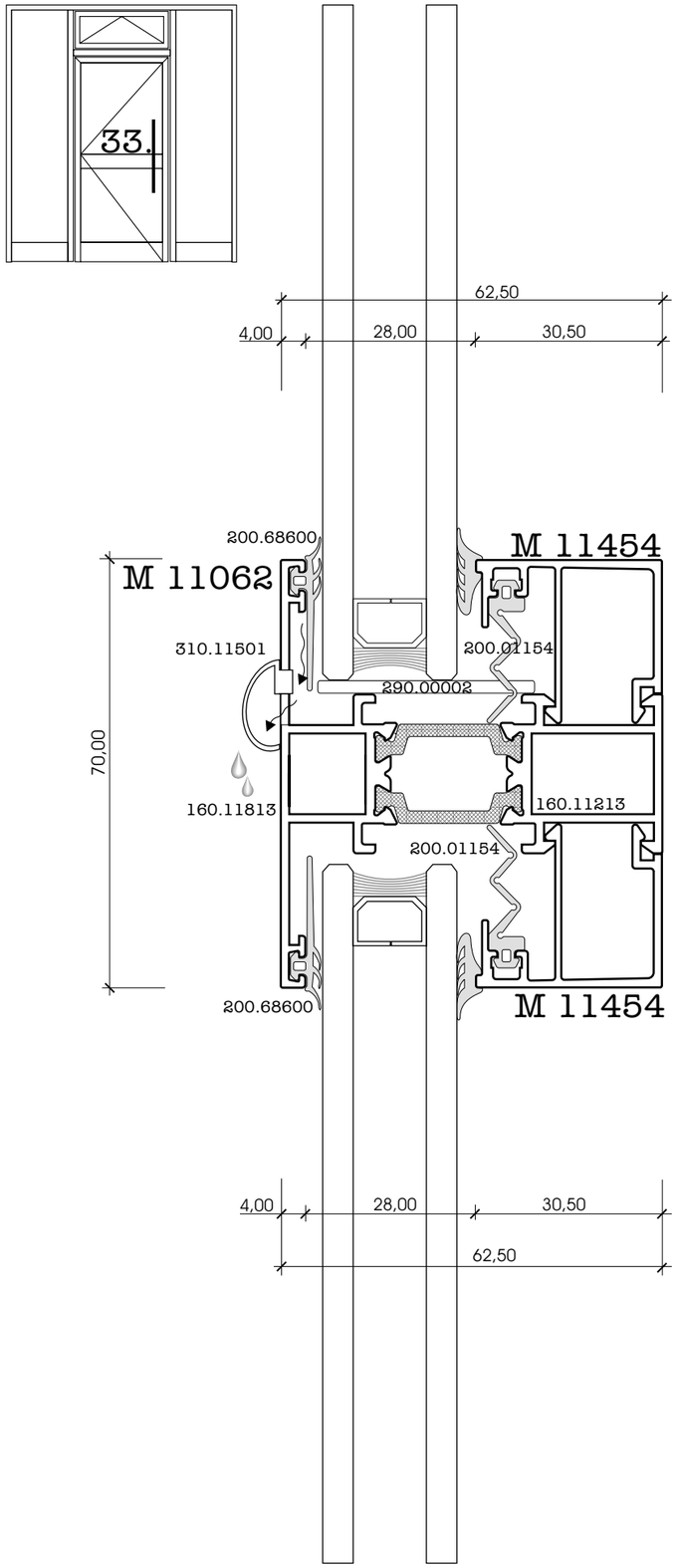
62,50
4,00
28,00
30,50
200.68600
M 11454
M 11062
310.11501
200.01154
290.00002
70,00
160.11813
160.11213
200.01154
200.68600
M 11454
22,00
26,00
70,00
22,00
4,00
28,00
30,50
62,50

34.

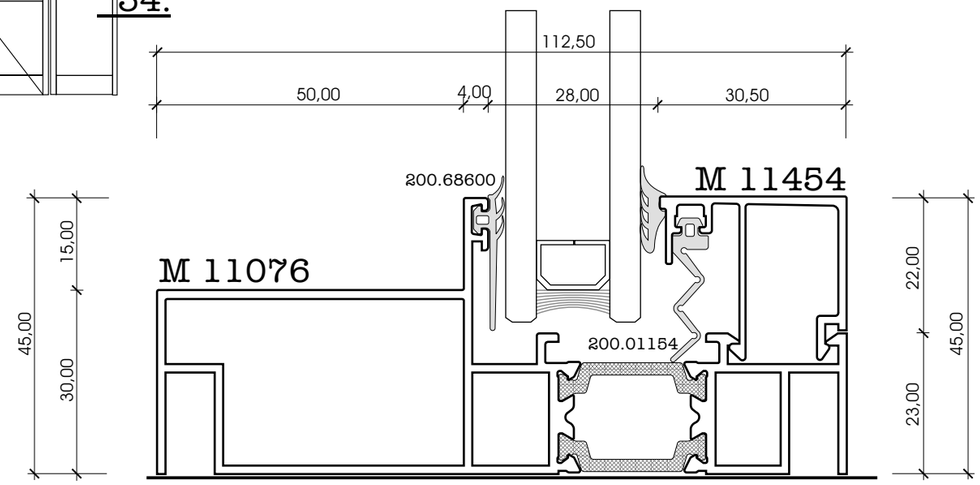
112,50
50,00
4,00
28,00
30,50
200.68600
M 11454
M 11076
200.01154
45,00
15,00
30,00
22,00
23,00
45,00

34a.

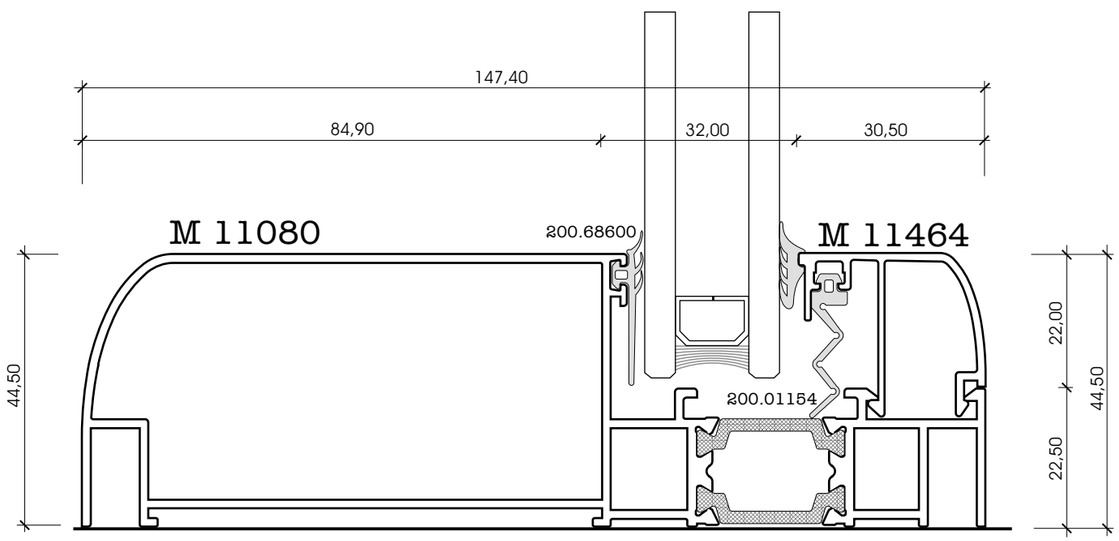
147,40
84,90
32,00
30,50
M 11080
200.68600
M 11464
200.01154
44,50
22,00
22,50
44,50

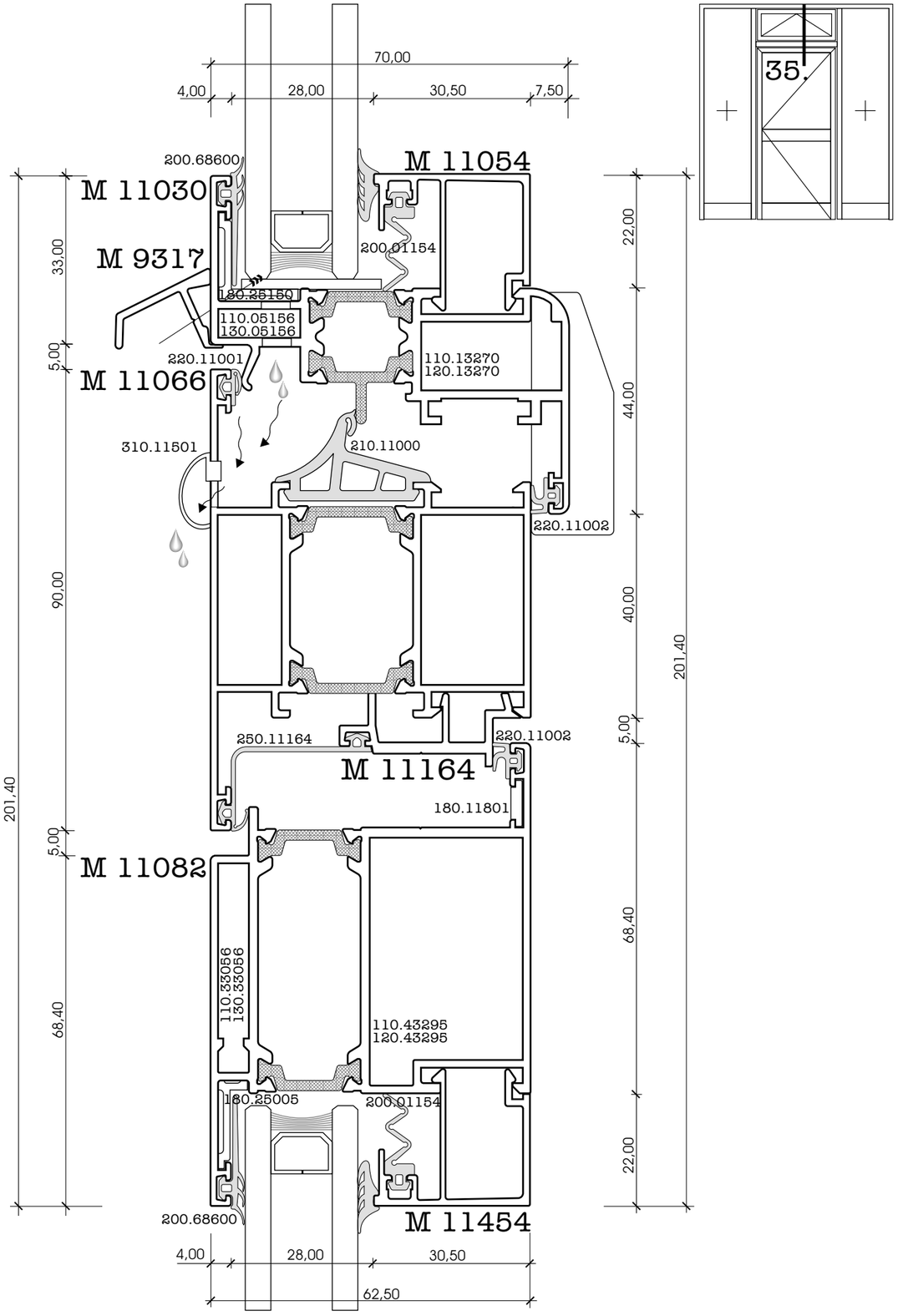
70,00
4,00
28,00
30,50
7,50
35.
200.68600
M 11030
M 11054
M 9317
200.01154
130.25150
110.05156
130.05156
220.11001
M 11066
110.13270
120.13270
310.11501
210.11000
220.11002
250.11164
M 11164
180.11801
M 11082
110.33056
130.33056
110.43295
120.43295
180.25005
200.01154
M 11454
62,50
33,00
5,00
90,00
201,40
68,40
22,00
44,00
40,00

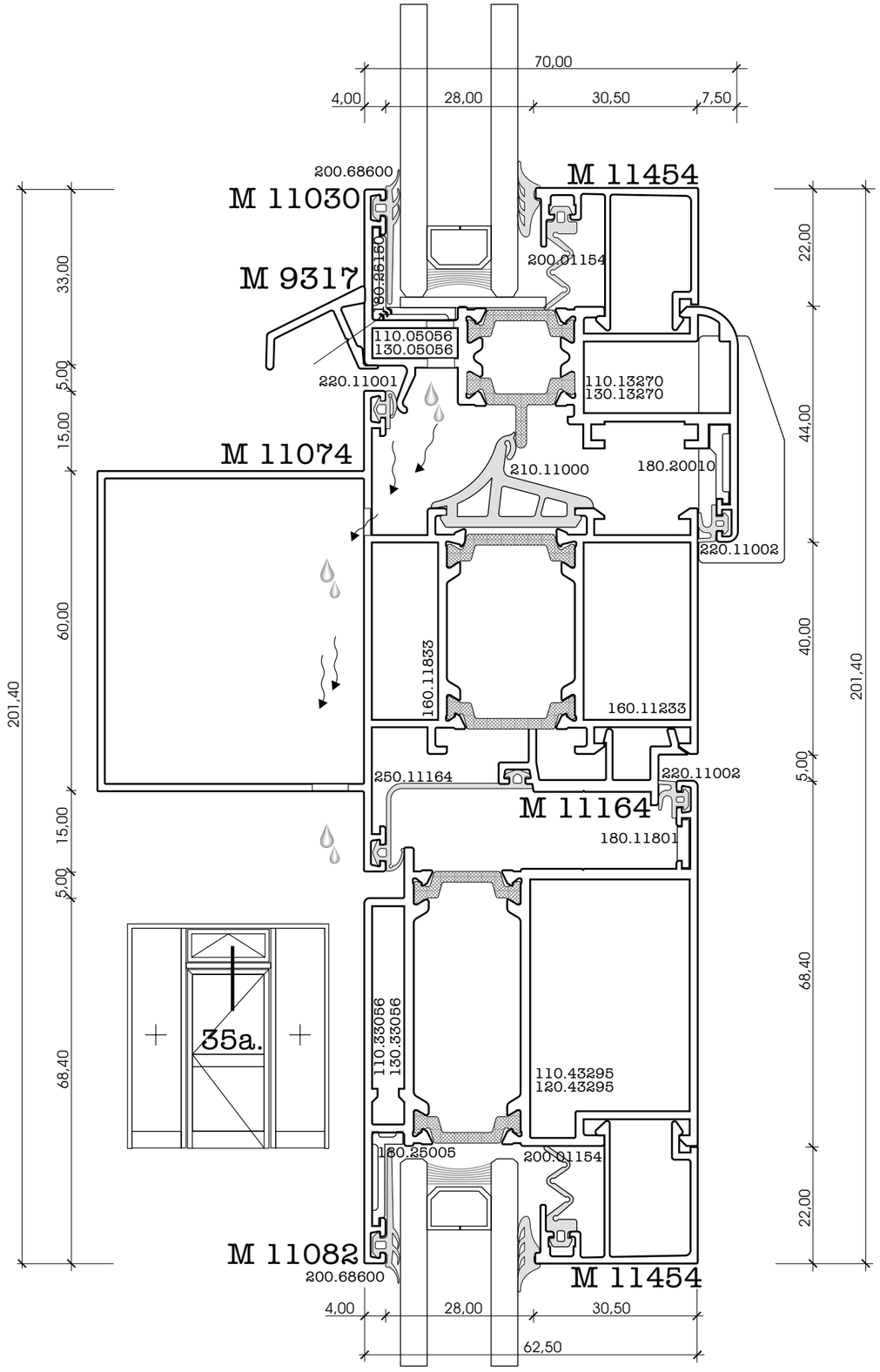
70,00
4,00
28,00
30,50
7,50
200.68600
M 11030
M 11454
M 9317
200.01154
130.25150
110.05056
130.05056
220.11001
110.13270
130.13270
M 11074
210.11000
180.20010
220.11002
160.11833
160.11233
250.11164
M 11164
180.11801
35a.
110.33056
130.33056
110.43295
120.43295
180.25005
200.01154
M 11082
M 11454
62,50
33,00
5,00
15,00
60,00
201,40
68,40
22,00
44,00
40,00

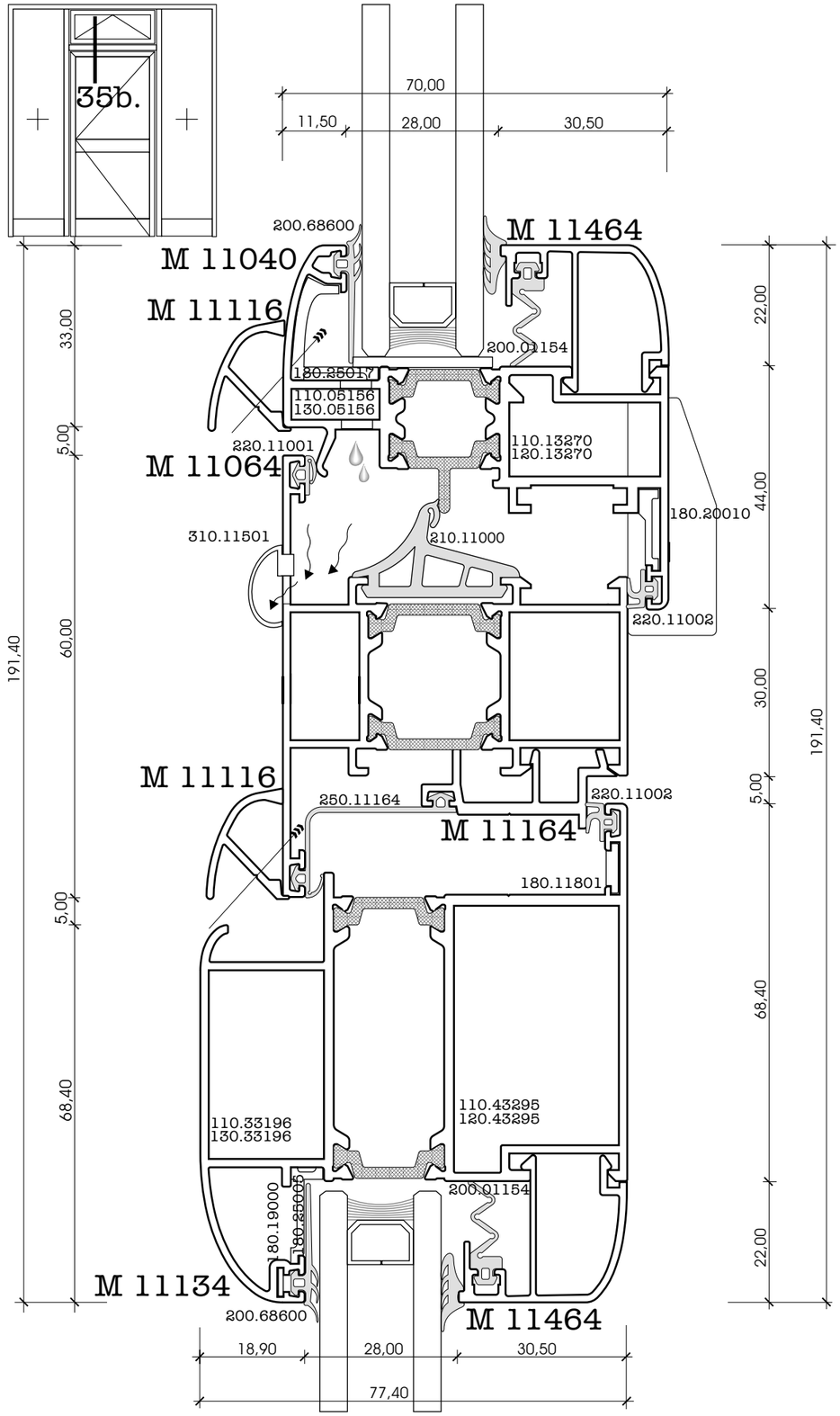
35b.
70,00
11,50
28,00
30,50
200.68600
M 11464
M 11040
M 11116
200.01154
180.25017
110.05156
130.05156
220.11001
M 11064
110.13270
120.13270
180.20010
310.11501
210.11000
220.11002
M 11116
250.11164
M 11164
180.11801
110.33196
130.33196
110.43295
120.43295
200.01154
180.19000
180.25005
M 11134
200.68600
M 11464
18,90
28,00
30,50
77,40
191,40
33,00
5,00
60,00
68,40
22,00
44,00
30,00
5,00
68,40
22,00
191,40

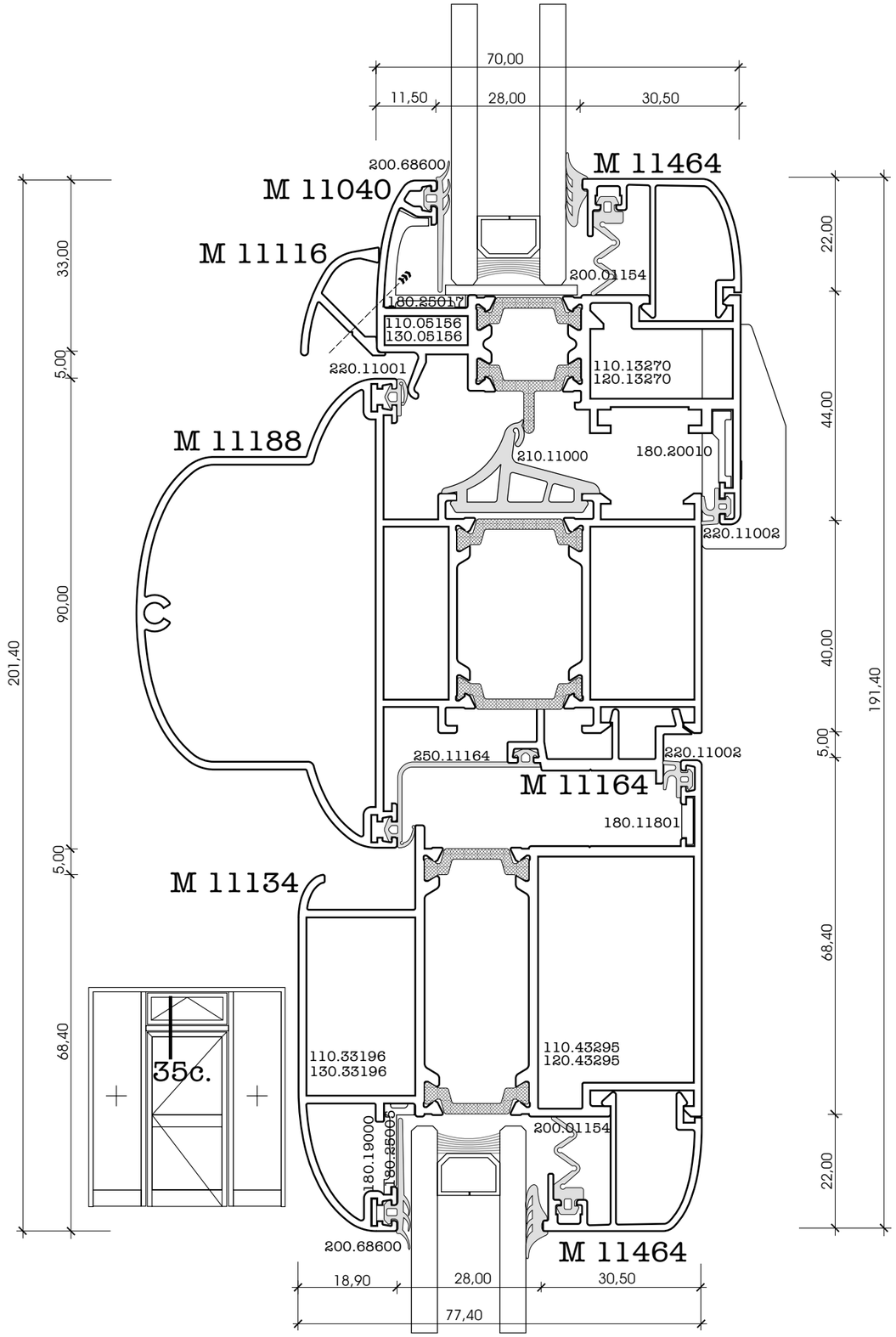
70,00
11,50
28,00
30,50
200.68600
M 11464
M 11040
M 11116
200.01154
180.25017
110.05156
130.05156
220.11001
110.13270
120.13270
M 11188
210.11000
180.20010
220.11002
250.11164
M 11164
180.11801
M 11134
35c.
110.33196
130.33196
110.43295
120.43295
200.01154
180.19000
180.25005
200.68600
M 11464
18,90
28,00
30,50
77,40
201,40
33,00
5,00
90,00
68,40
22,00
44,00
40,00
5,00
68,40
22,00
191,40

36.

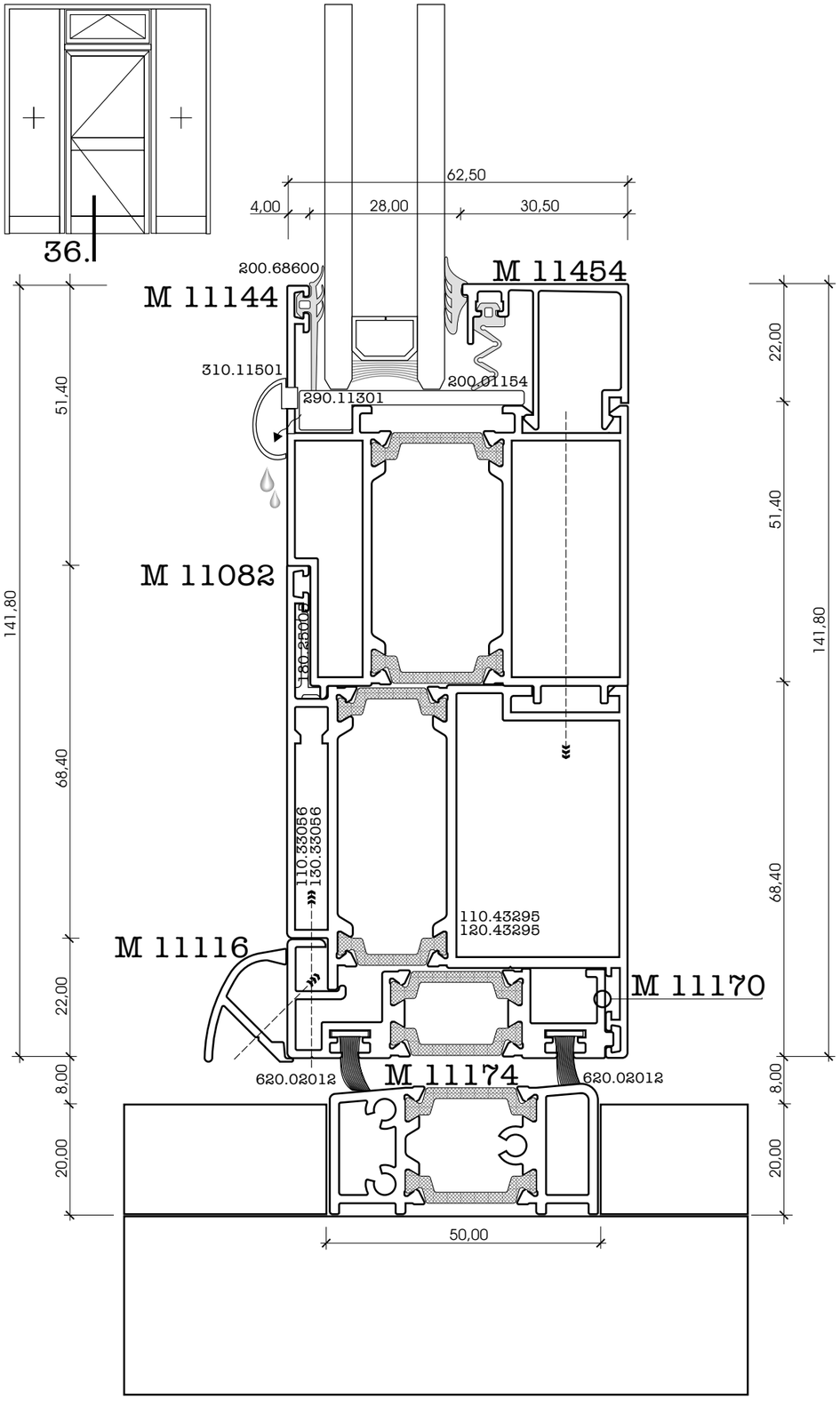
62,50
4,00
28,00
30,50
200.68600
M 11454
M 11144
310.11501
200.01154
290.11301
51,40
141,80
M 11082
68,40
110.33056
130.33056
110.43295
120.43295
M 11116
M 11170
22,00
620.02012
M 11174
620.02012
8,00
20,00
50,00

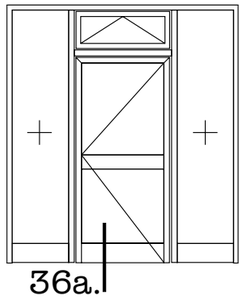

36a.

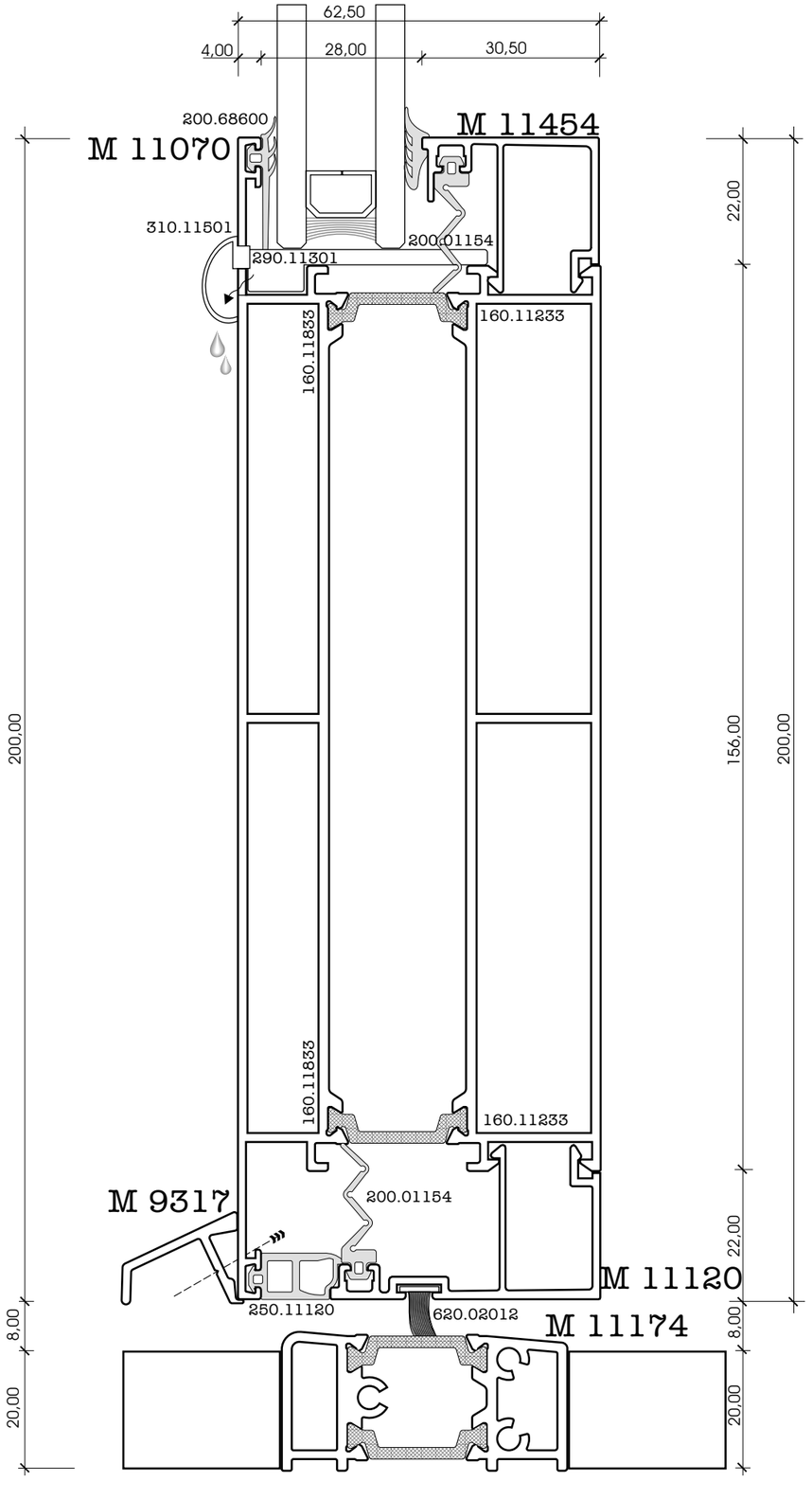
62,50
4,00
28,00
30,50
200.68600
M 11454
M 11070
310.11501
200.01154
290.11301
160.11833
160.11233
22,00
200,00
156,00
M 9317
250.11120
M 11120
620.02012
M 11174
8,00
20,00

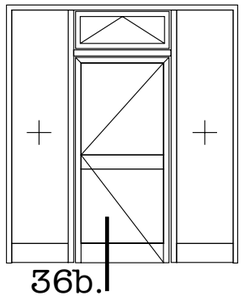
36b.

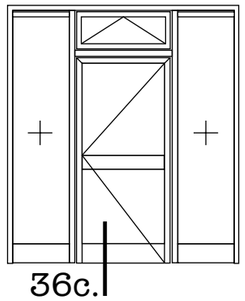
36c.

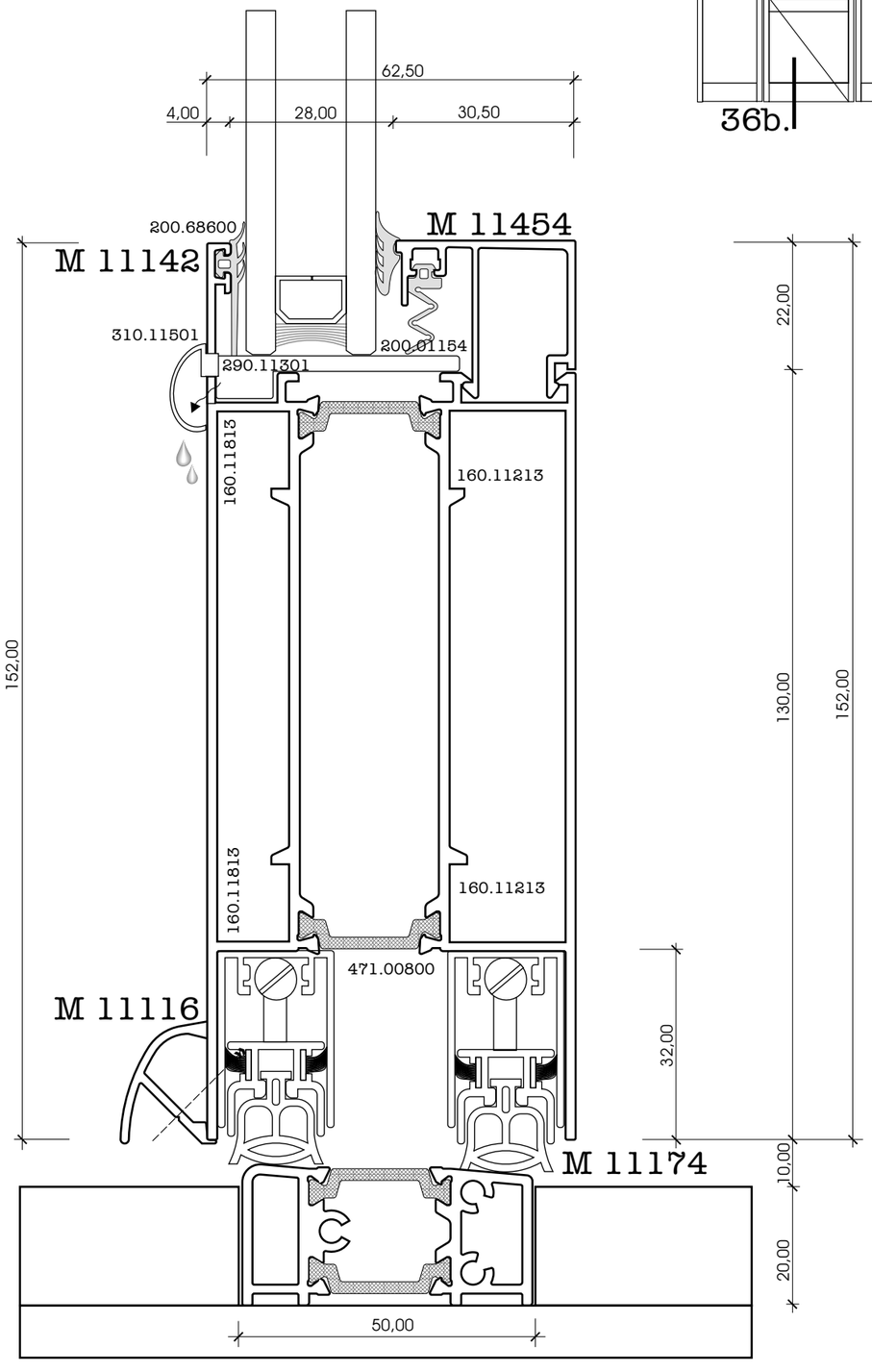
62,50
4,00
28,00
30,50
200.68600
M 11454
M 11142
310.11501
200.01154
290.11301
160.11813
160.11213
22,00
152,00
130,00
152,00
160.11813
160.11213
471.00800
M 11116
32,00
M 11174
10,00
20,00
50,00

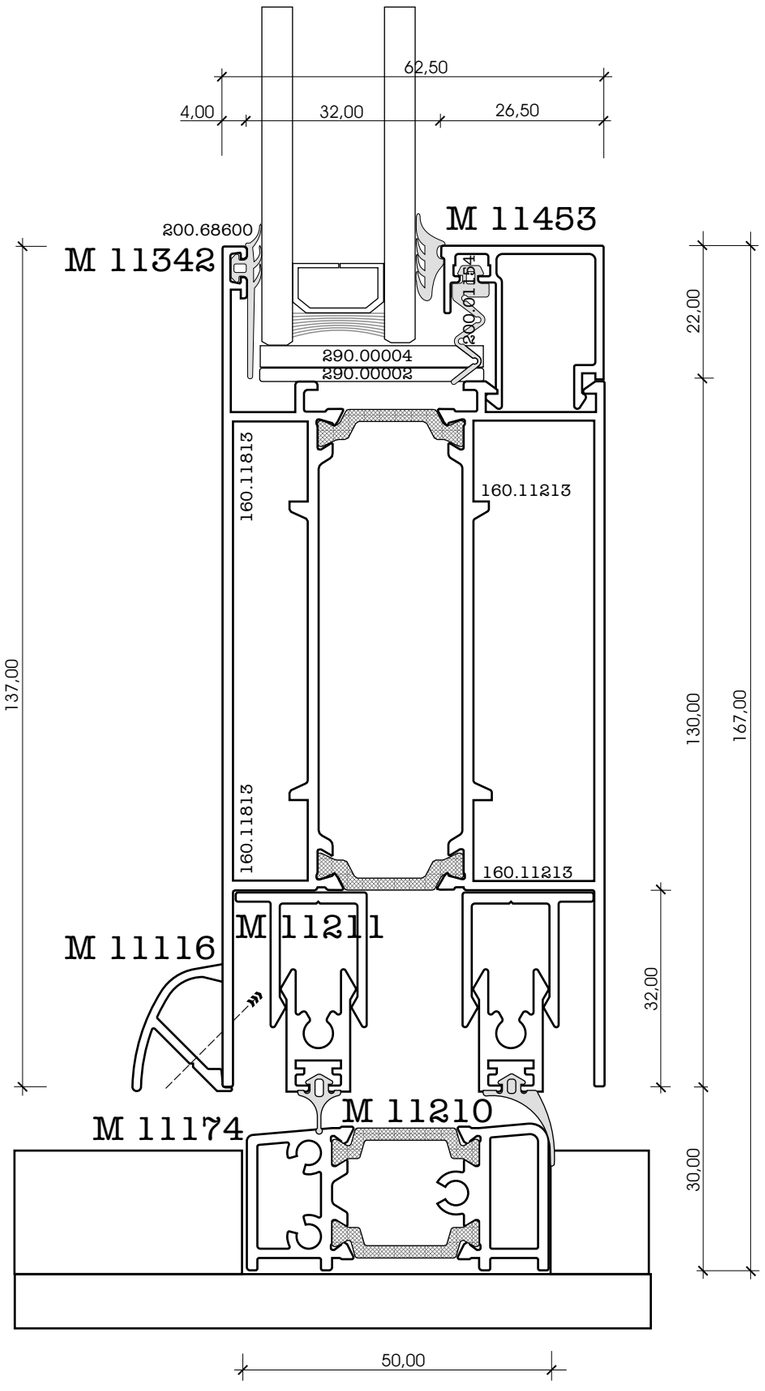
62,50
4,00
32,00
26,50
200.68600
M 11453
M 11342
200.01154
290.00004
290.00002
160.11813
160.11213
22,00
137,00
130,00
167,00
160.11813
160.11213
M 11116
M 11211
32,00
M 11174
M 11210
30,00
50,00

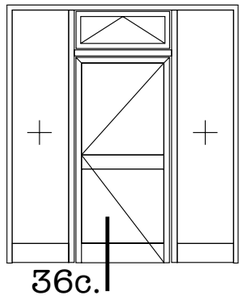
36c.

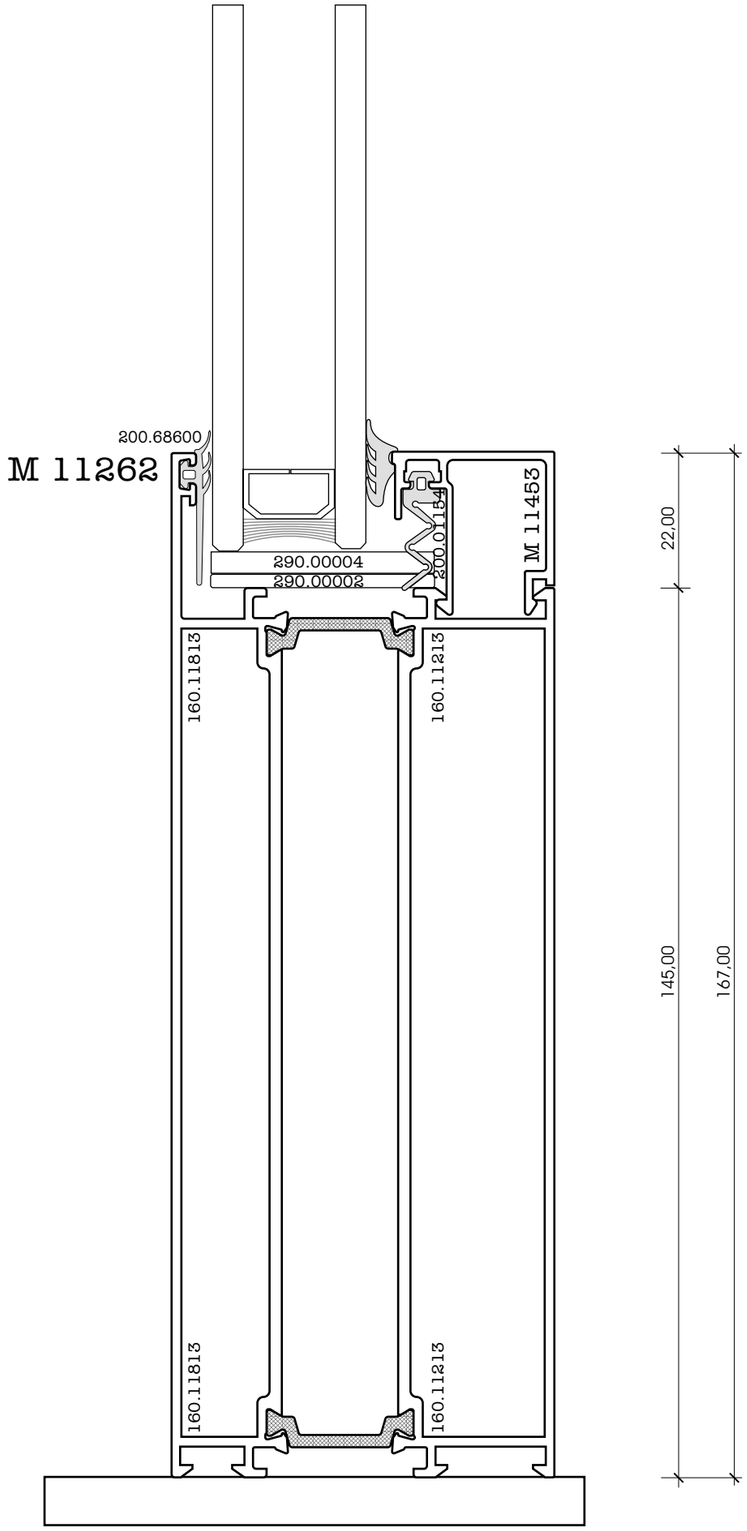
M 11262
200.68600
290.00004
290.00002
200.01154
M 11453
160.11813
160.11213
160.11813
160.11213
22,00
145,00
167,00

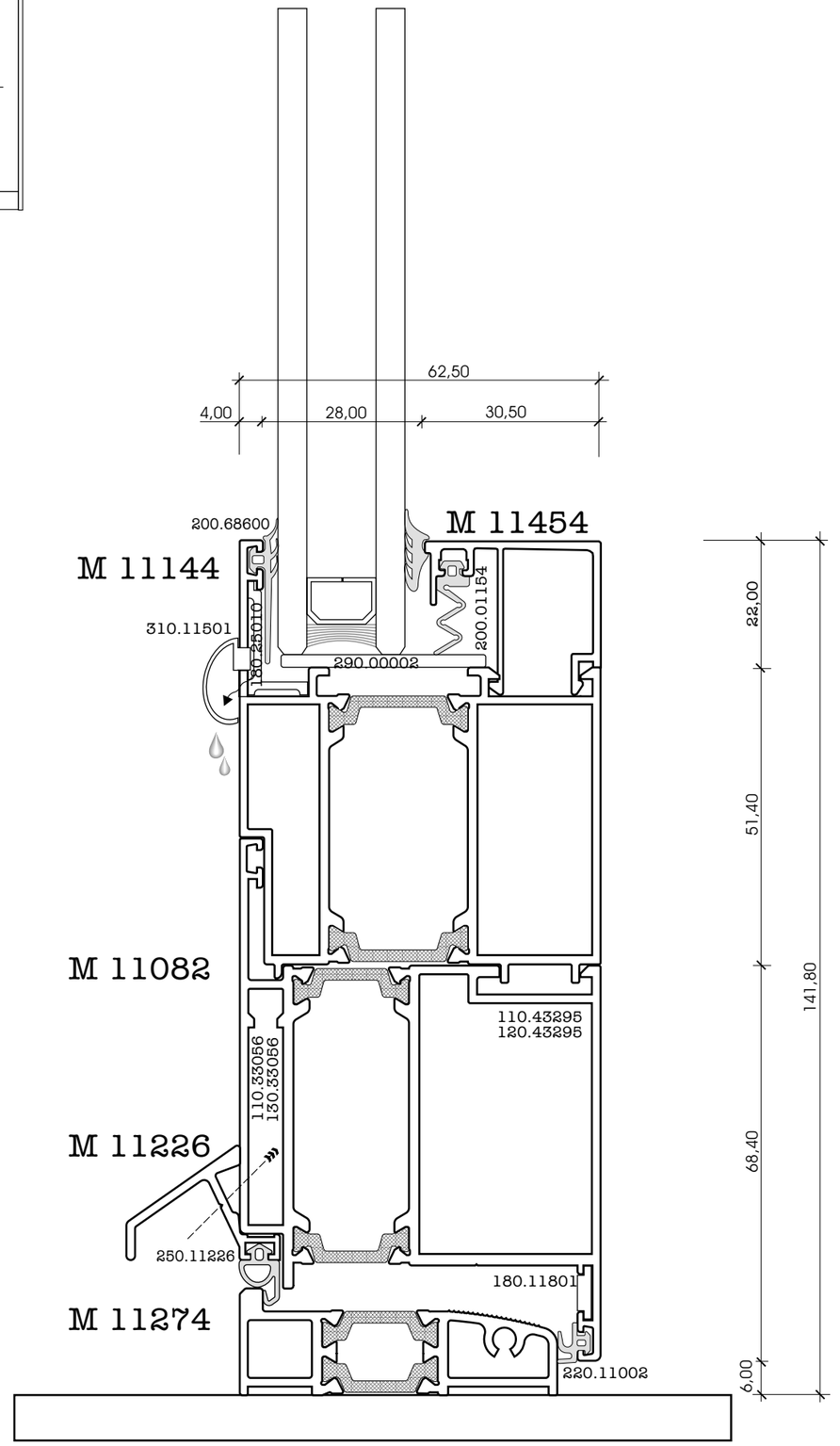
62,50
4,00
28,00
30,50
M 11144
200.68600
M 11454
310.11501
180.25010
290.00003
200.01154
M 11082
110.43295
120.43295
110.33056
130.33056
M 11226
250.11226
180.11801
M 11274
220.11002
22,00
51,40
141,80
68,40
6,00

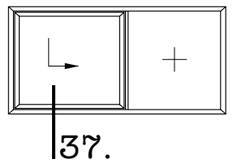

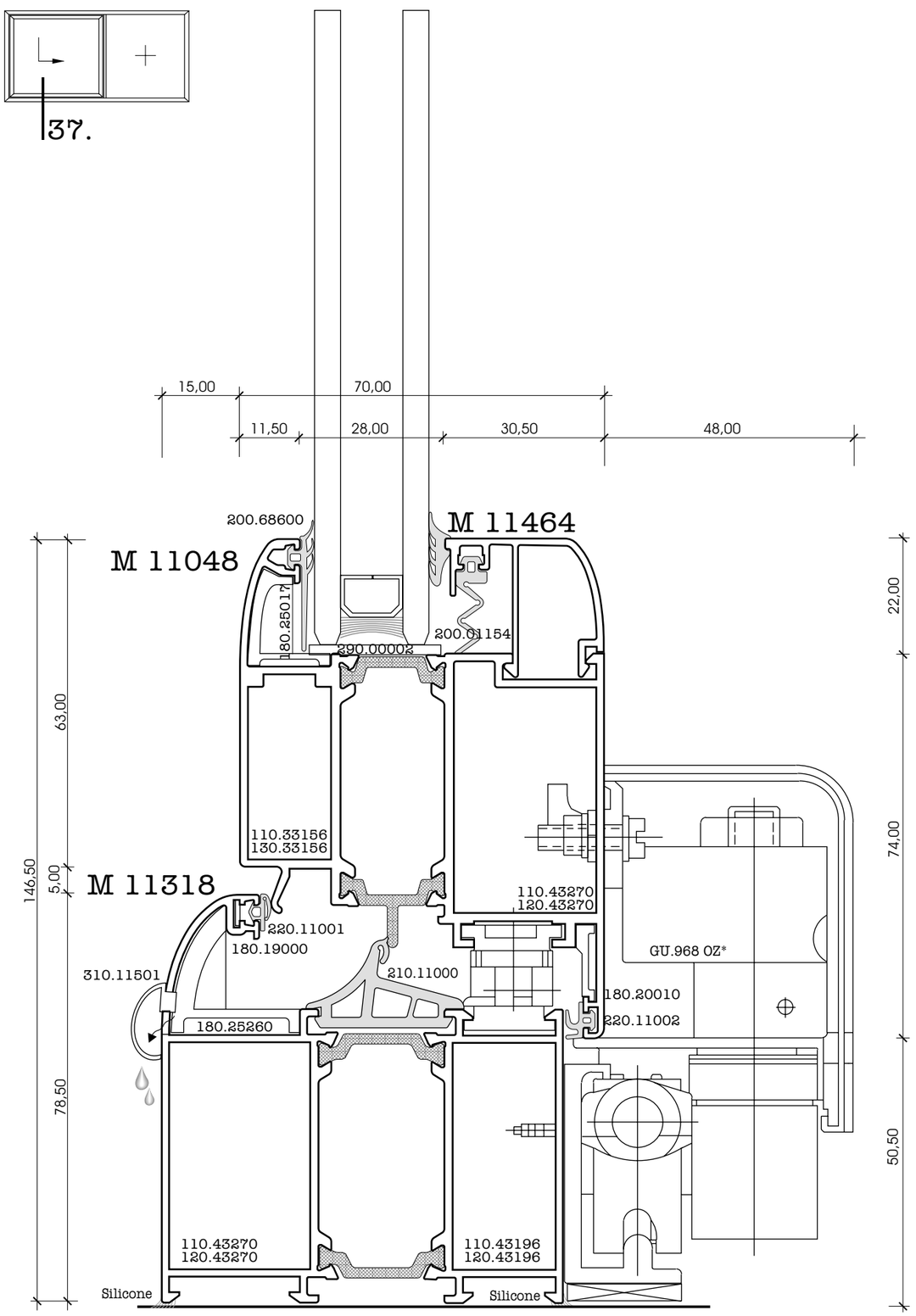

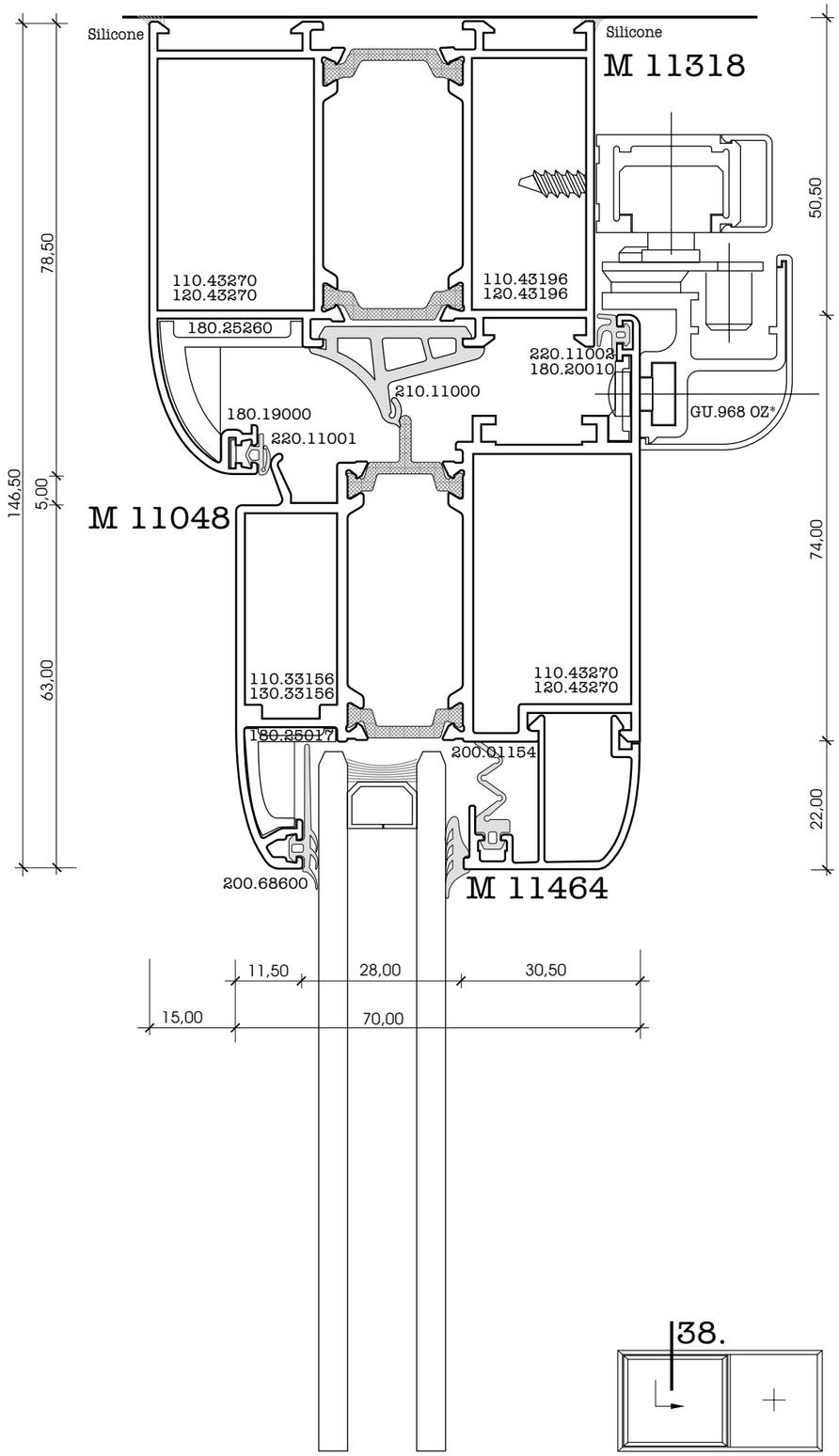

***Note**:The accessorie GU.968.OZ can be purchased from Gretsch Unitas

SYSTEM 11000

"ALUTHERM PLUS"

CUTTING ANALYSIS

Overview

WINDOWS

1.Fixed window.....VI/4
2.Tilt and turn window.....VI/5
3.Tilt and turn+fixed vertical window.....VI/6
4.Tilt and turn+fixed horisontal window.....VI/7
5.Double tilt and turn window with T-profile.....VI/8
6.Double tilt and turn window with adjoining profile.....VI/9
7.Tilt and slide window.....VI/10
8.Tilt and turn window with T-profile.....VI/11
9.Pivoting window.....VI/12
10.Pivoting window with T-profile.....VI/13

DOORS

1.Inside opening doors-simples.....VI/14
2.Outside opening door-simple.....VI/17
3.Inside opening doors-double.....VI/19
4.Outside opening doors-double.....VI/21
5.Inside opening door+fixed frame.....VI/23
6.Outside opening door+fixed frame.....VI/24
7.Inside opening double doors with fixed part and window.....VI/25
8.Outside opening double doors with fixed part and window.....VI/27

GENERAL INSTRUCTIONS

1.The following cutting instructions are calculated according to the accessories provided by Alumil and given in chapter IV “Accessories”.

2.The dimensions must be respected in order to insure an air and water tight seal .

3.All dimensions should be verified against the particular profiles chosen for each typology .

4.The following cutting instructions are for specific typologies with specific profiles .

5.Any variances must be taken into consideration to insure proper cutting lenghts .

6.The number of necessary hanges and handles depends on the dimensions H , L of the window (door) .

7.For the situation from page VI/09 use GU 968 OZ tilt and slide mechanism from Gretch Unitas.

8.For pivoting window (page VI/11) use 350.00230 mechanism-see page IV/33 in chapter IV “Accessories”.

9.The examples are calculated with extruded aluminium press corners.

Fixed window

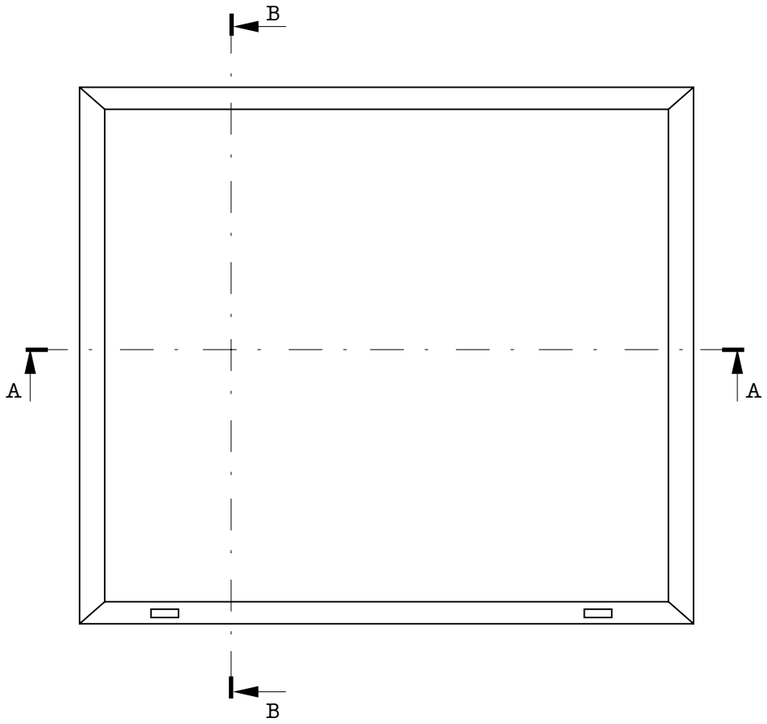

Profile		Cut	Quantity (pcs)	Dimensions (mm)	Page
M11008			2pcs	L	III/11
			2pcs	H	III/11
M11454			2pcs	L1=L-52	III/64
			2pcs	H1=H-96	III/64
M11463			2pcs	L1=L-96	III/65
			2pcs	H1=H-96	III/65

Glass sizes
g=L-68
h=H-68

Accessories	Quantity (pcs)	Page	View
110.13121	4	IV/04	
110.13196	4	IV/04	
180.25010	4	IV/12	
290.00002	2	IV/50	
200.68.600	2L1+2H1	IV/44	
200.01154	2L1+2H1	IV/44	
PR.**	2L1+2H1	IV/44	
250.15513	L	IV/44	
250.15520	L	IV/44	

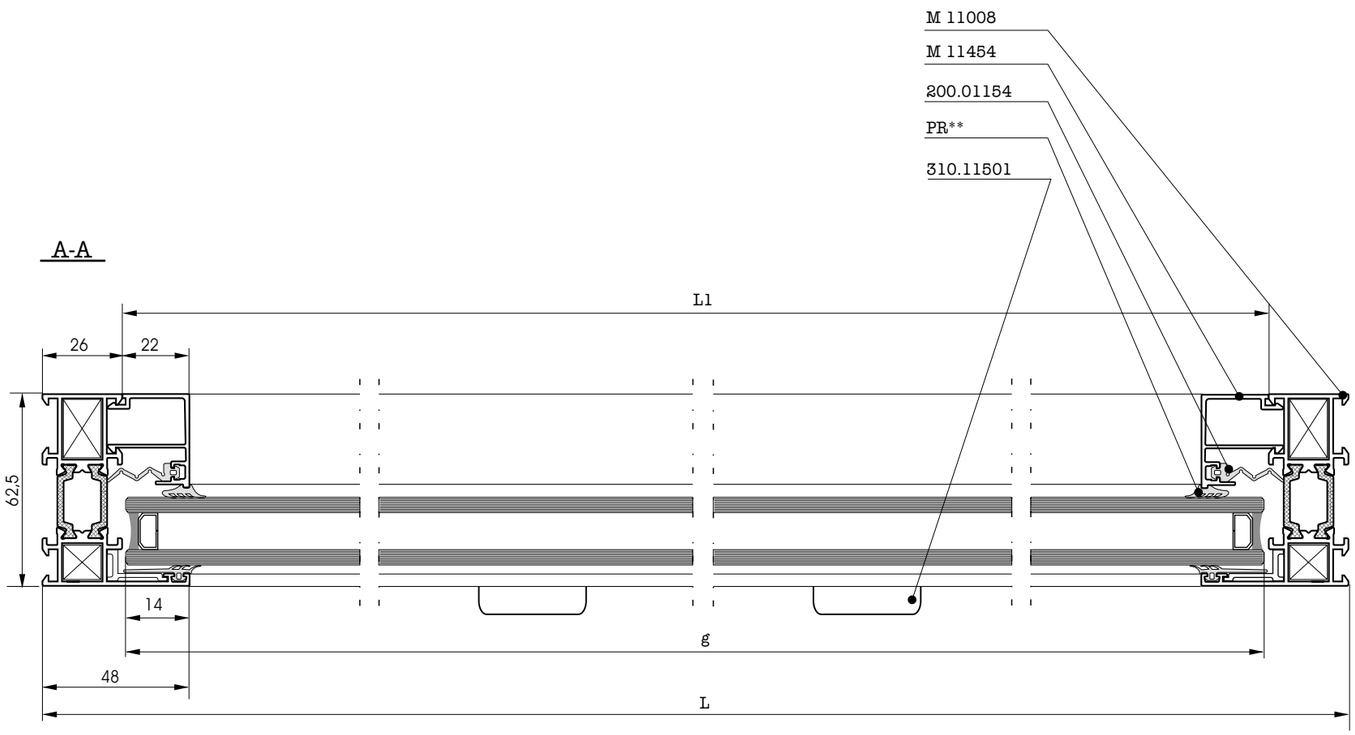

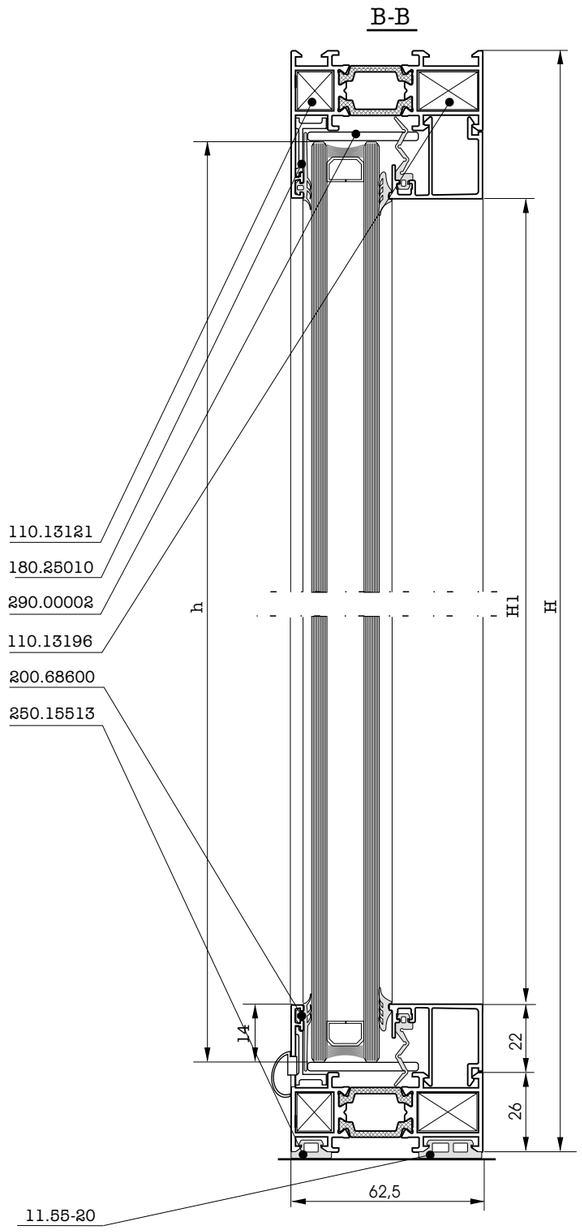

Tilt and turn window

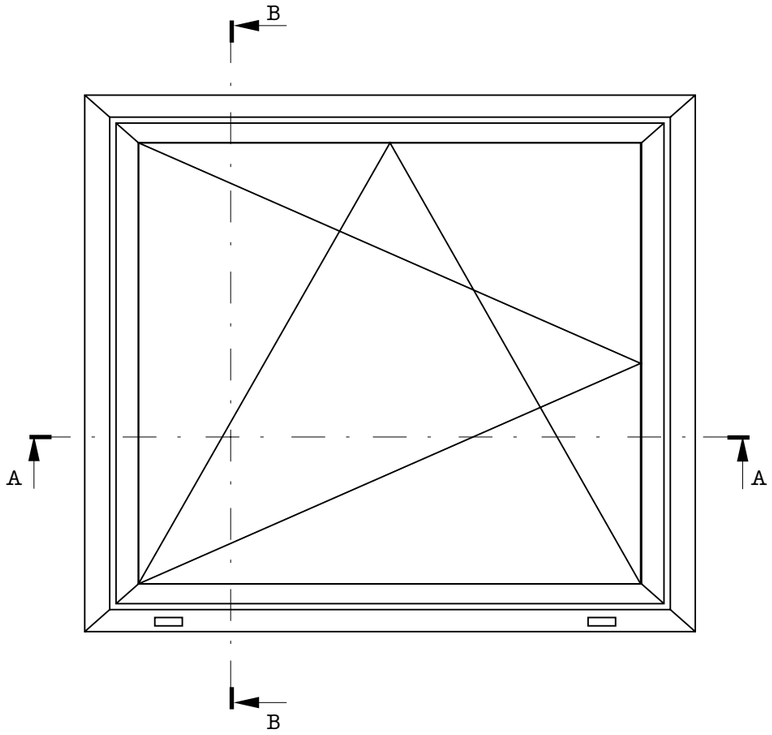

Profile		Cut	Quantity (pcs)	Dimensions (mm)	Page
M11010			2pcs	L	III/11
			2pcs	H	III/11
M11034			2pcs	Ls=L-60	III/21
			2pcs	Hs=H-60	III/21
M9317			1pcs	Ls	III/52
M11454			2pcs	L1=L-168	III/64
			2pcs	H1=H-212	III/64
M11463			2pcs	L1=L-212	III/65
			2pcs	H1=H-212	III/65

Accessories	Quantity (pcs,m)	Page	View
110.23121	4pcs	IV/04	
110.23196	4pcs	IV/04	
110.15156	4pcs	IV/04	
110.23270	4pcs	IV/04	
180.25010	4pcs	IV/12	
180.25150	4pcs	IV/12	
180.20010	4pcs	IV/14	
290.00002	4pcs	IV/50	
310.11501	2pcs	IV/**	
210.11000	2Ls+2Hs	IV/44	
200.68600	2l+2h	IV/44	
200.01154	2l+2h	IV/44	
PR.**	2l+2h	IV/44	
220.11001	2l+2h	IV/44	
220.11002	2Ls+2Hs	IV/44	
250.15513	L	IV/44	
250.15520	L	IV/44	
310.11226	2pcs	IV/41	

Glass sizes
g=L-184
h=H-184

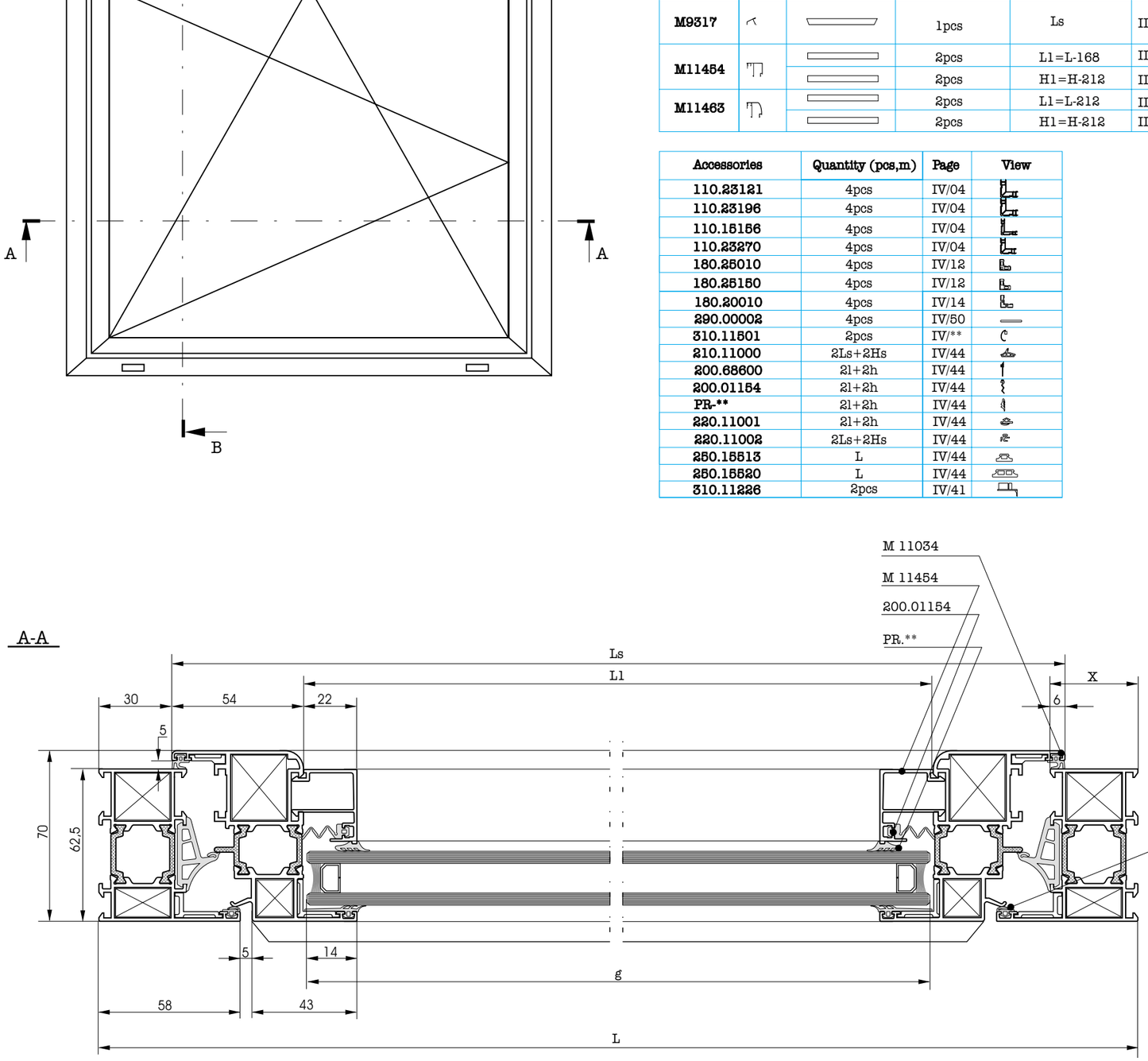

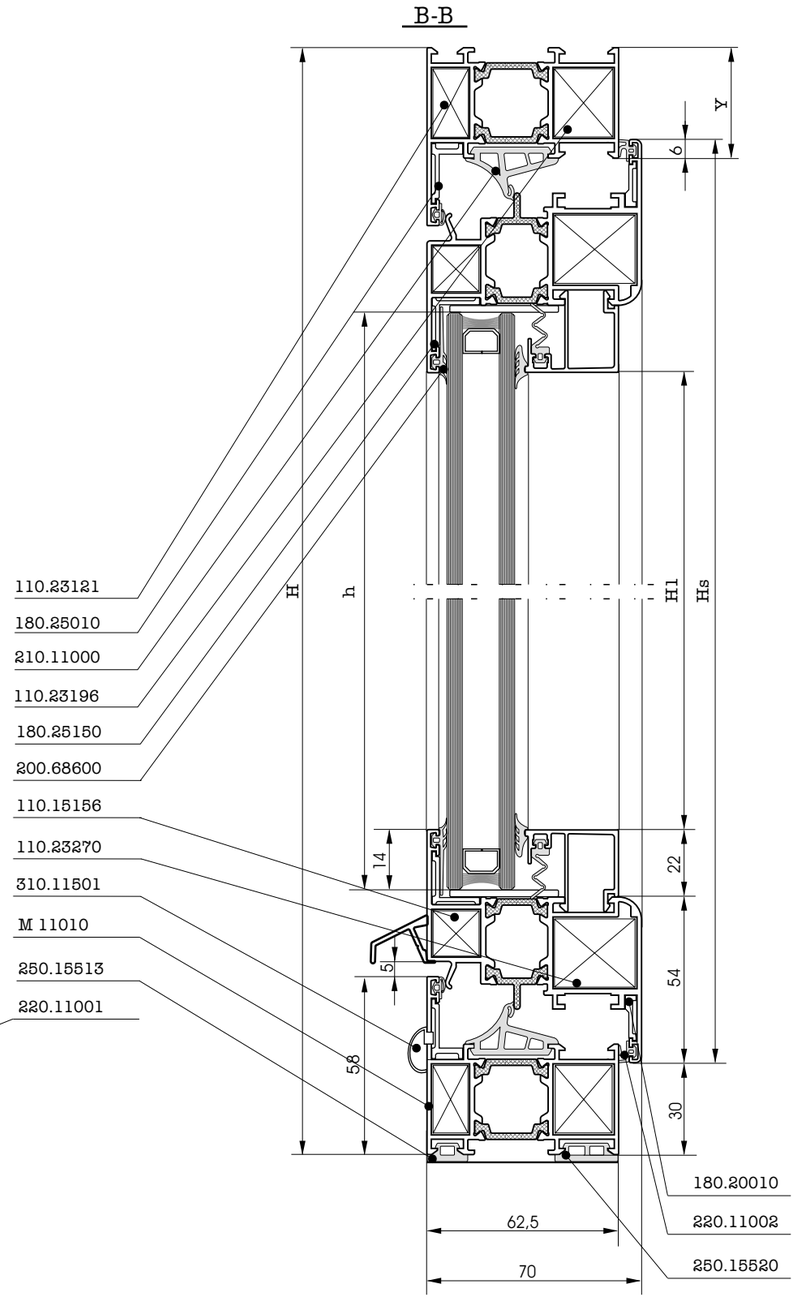

NOTE:
This example is for the frame M11010.To calculate for a different frame please use the following formulaes: **Ls=L-2X+12,mm**
Hs=H-2Y+12,mm

Tilt and turn+fixed vertical window

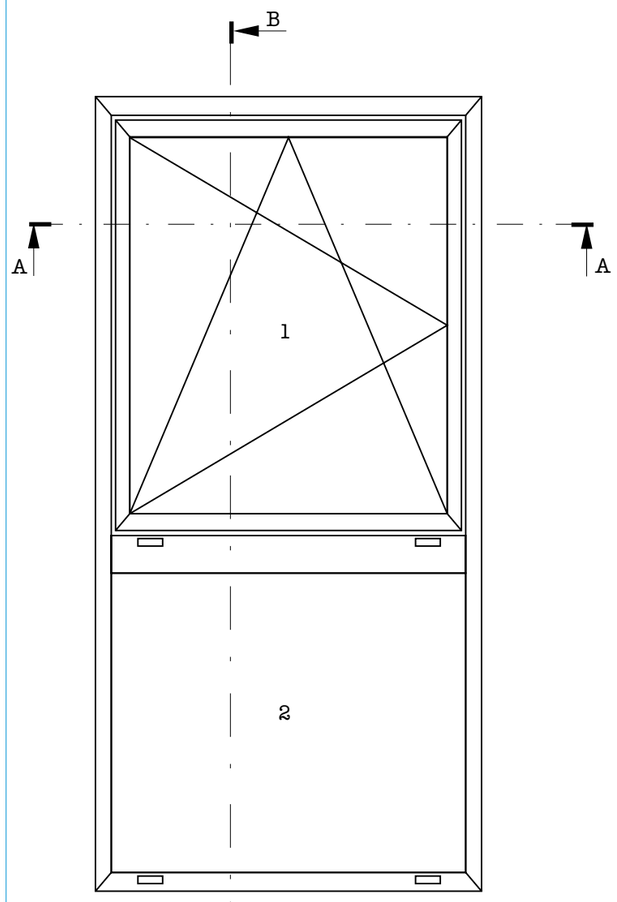

Profile		Cut	Quantity (pcs)	Dimensions (mm)	Page
M11010			2pcs	L	III/11
			2pcs	H	III/11
M11034			2pcs	Ls=L-60	III/21
			2pcs	Hs=H-A-42	III/21
M9317			1pcs	Ls	III/52
M11064			1pcs	Lt=L-72	III/37
M11454			2pcs	L1=L-168	III/64
			2pcs	H1=H-A-194	III/64
M11454			2pcs	L2=L-72	III/64
			2pcs	H2=A-98	III/64

Accessories	Quantity (pcs,m)	Page	View
110.23121	4pcs	IV/04	
110.23196	4pcs	IV/04	
110.15156	4pcs	IV/04	
110.23270	4pcs	IV/04	
180.25010	4pcs	IV/12	
180.25150	4pcs	IV/12	
180.20010	4pcs	IV/20	
290.00002	8pcs	IV/50	
310.11501	2pcs	IV/**	
210.11000	2Ls+2Hs	IV/44	
200.68600	2(L1+H1+L2+H2)	IV/44	
200.01154	2(L1+H1+L2+H2)	IV/44	
PR.**	2(L1+H1+L2+H2)	IV/44	
220.11001	2Ls+2Hs	IV/44	
220.11002	2Ls+2Hs	IV/44	
250.15513	L	IV/44	
250.15520	L	IV/44	
160.11223	2pcs	IV/18	
160.11823	2pcs	IV/18	
310.11226	2pcs	IV/41	

Glass sizes
g1=L-184
h1=H-A-166
g2=L-88
h2=A-70

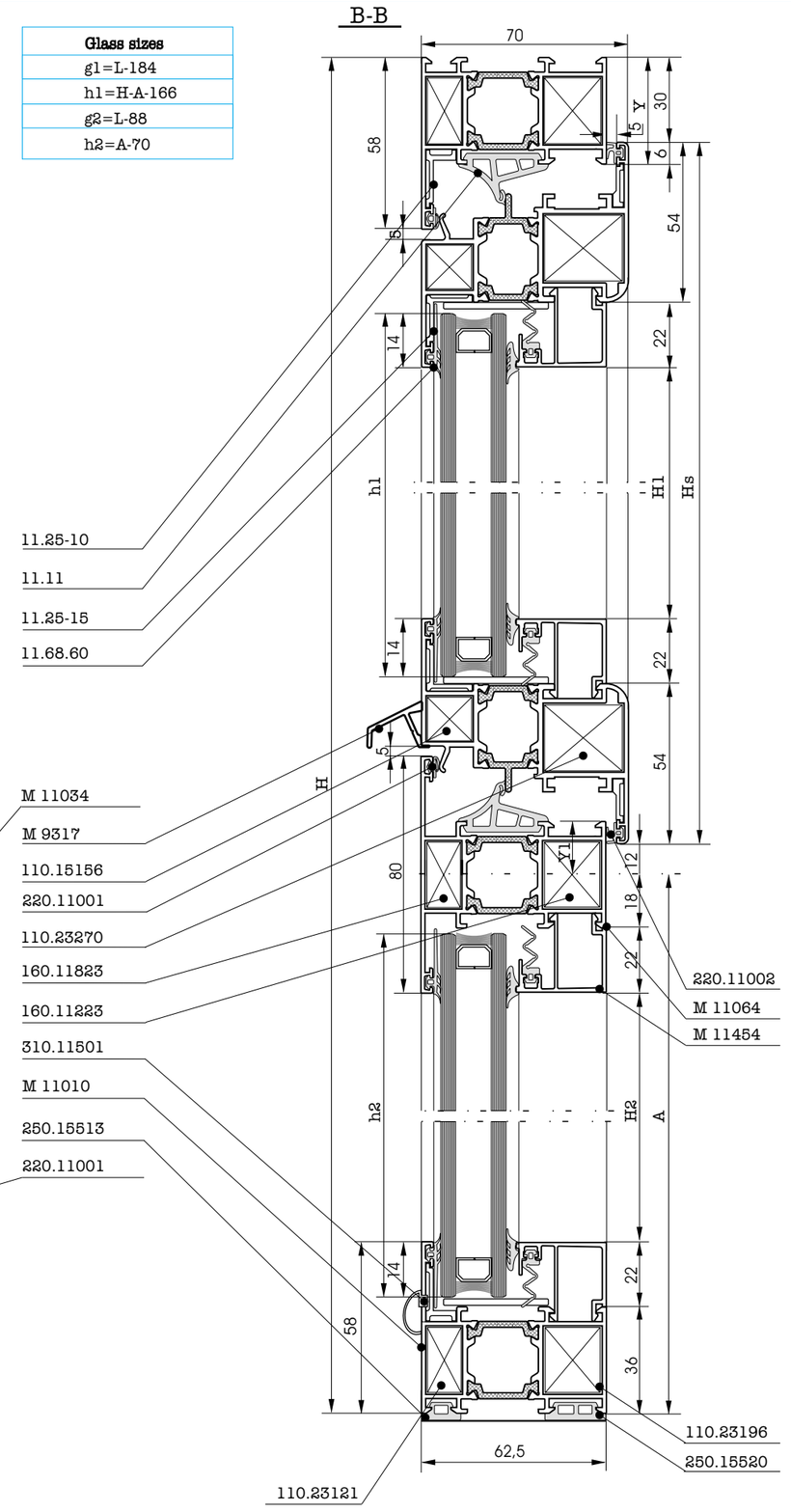

NOTE:
This example is for the frame M11010.To calculate for a different frame please use the following formulaes : **Ls=L-2X+12,mm**
Hs=H-Y-Y1-A+12,mm

Tilt and turn+fixed horisontal window

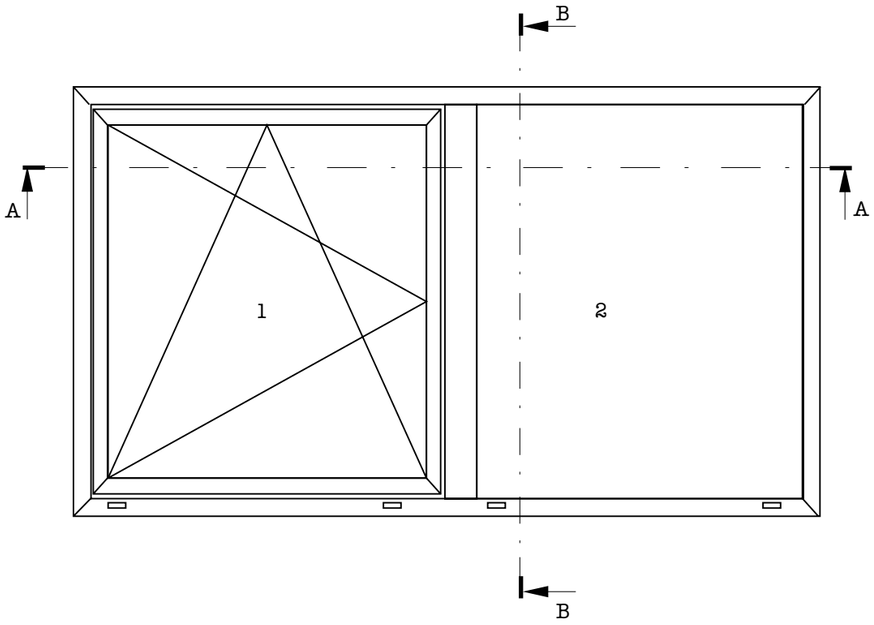

Profile		Cut	Quantity (pcs)	Dimensions (mm)	Page
M11010			2pcs	L	III/11
			2pcs	H	III/11
M11034			2pcs	Ls=B-42	III/21
			2pcs	Hs=H-60	III/21
M11064			1pcs	Ht=H-72	III/37
M11454			2pcs	L1=B-150	III/64
			2pcs	H1=H-212	III/64
M11454			2pcs	L2=L-B-54	III/64
			2pcs	H2=H-72	III/64

Glass sizes
g1=B-166
h1=H-184
G2=L-B-70
h2=H-88

Accessories	Quantity (pcs,m)	Page	View
110.23121	4pcs	IV/04	
110.23196	4pcs	IV/04	
110.15156	4pcs	IV/04	
110.23270	4pcs	IV/04	
180.25010	4pcs	IV/12	
180.25150	4pcs	IV/12	
180.20010	4pcs	IV/20	
290.00002	4pcs	IV/50	
310.11501	4pcs	IV/**	
210.11000	2Ls+2Hs	IV/44	
200.68600	2(L1+H1+L2+H2)	IV/44	
200.01154	2(L1+H1+L2+H2)	IV/44	
PR-**	2(L1+H1+L2+H2)	IV/44	
220.11001	2Ls+2Hs	IV/44	
220.11002	2Ls+2Hs	IV/44	
250.15513	L	IV/44	
250.15520	L	IV/44	
160.11223	2pcs	IV/18	
160.11823	2pcs	IV/18	

B-B

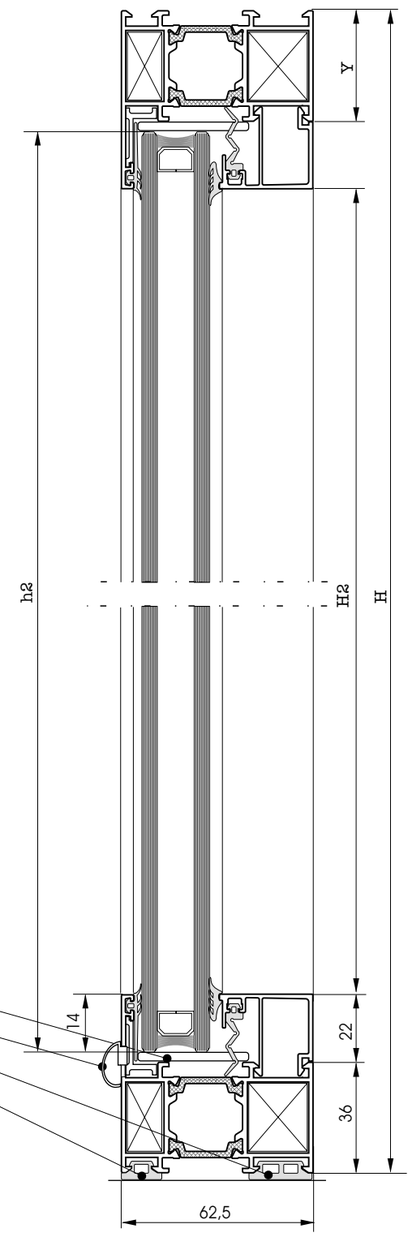

A-A

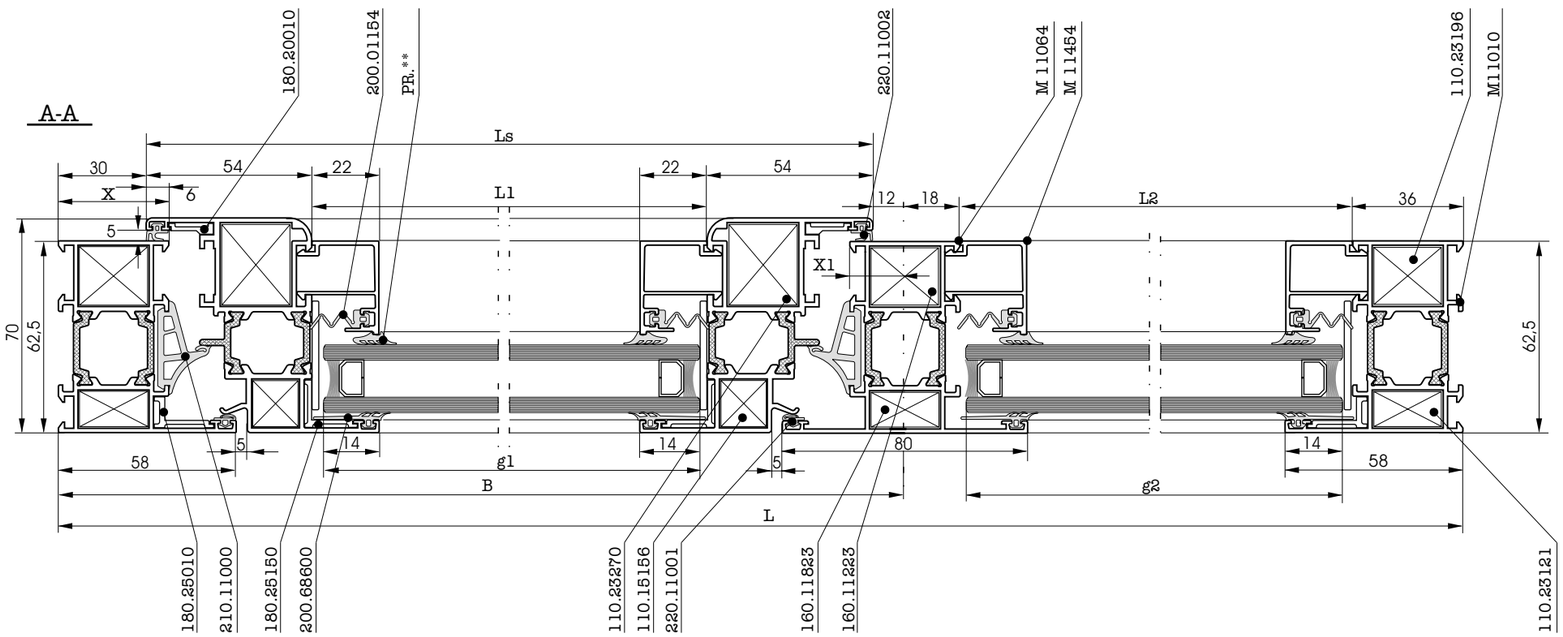

NOTE:
This example is for the frame M11010.To calculate for a different frame please use the following formulaes : **Ls=B-X-X1+12,mm**
Hs=H-2Y+12,mm

Double tilt and turn window with T-profile

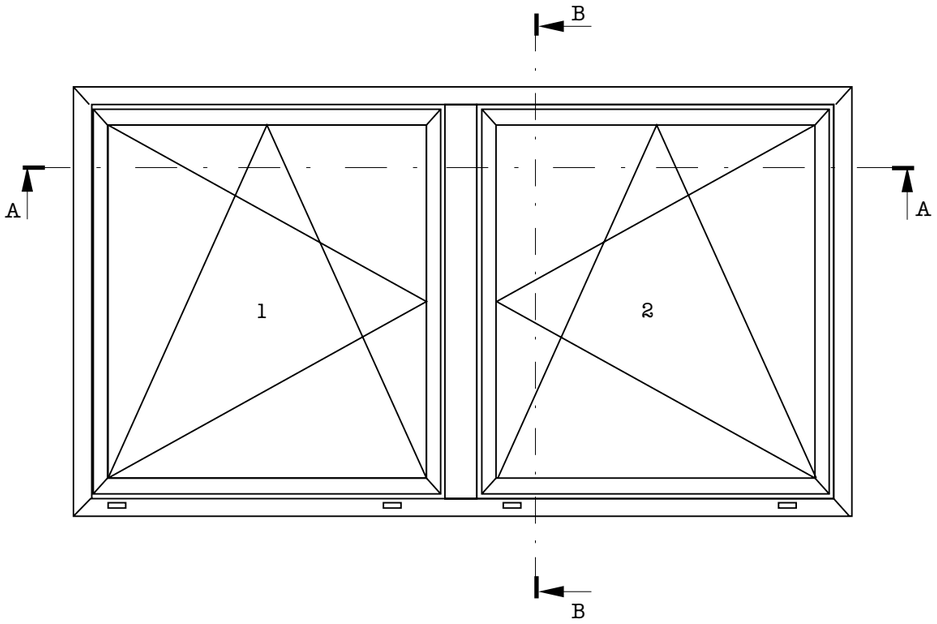

Profile		Cut	Quantity (pcs)	Dimensions (mm)	Page
M11010			2pcs	L	III/11
			2pcs	H	III/11
M11034			2pcs	Ls1=B-42	III/21
			2pcs	Hs1=H-60	III/21
M11034			2pcs	Ls2=L-B-42	III/21
			2pcs	Hs2=H-60	III/21
M9317			1pcs	Ls	III/52
M11064			1pcs	Ht=H-72	III/37
M11454			2pcs	L1=B-150	III/64
			2pcs	H1=H-212	III/64
M11454			2pcs	L2=L-B-42	III/64
			2pcs	H2=H-212	III/64

Glass sizes
g1=B-166
h1=H-184
g2=L-B-166
h2=H-184

Accessories	Quantity (pcs,m)	Page	View
110.23121	4pcs	IV/04	
110.23196	4pcs	IV/04	
110.15156	8pcs	IV/04	
110.23270	8pcs	IV/04	
180.25010	4pcs	IV/12	
180.25150	8pcs	IV/12	
180.20010	8pcs	IV/20	
290.00002	6-8pcs	IV/50	
310.11501	4pcs	IV/**	
210.11000	2Ls1+2Ls2+4Hs	IV/44	
200.68600	2(L1+L2)+4H1	IV/44	
200.01154	2(L1+L2)+4H1	IV/44	
PR-**	2(L1+L2)+4H1	IV/44	
220.11001	2Ls1+2Ls2+4Hs	IV/44	
220.11002	2Ls1+2Ls2+4Hs	IV/44	
250.15513	L	IV/44	
250.15520	L	IV/44	
160.11223	2pcs	IV/18	
160.11823	2pcs	IV/18	
310.11226	2pcs	IV/41	

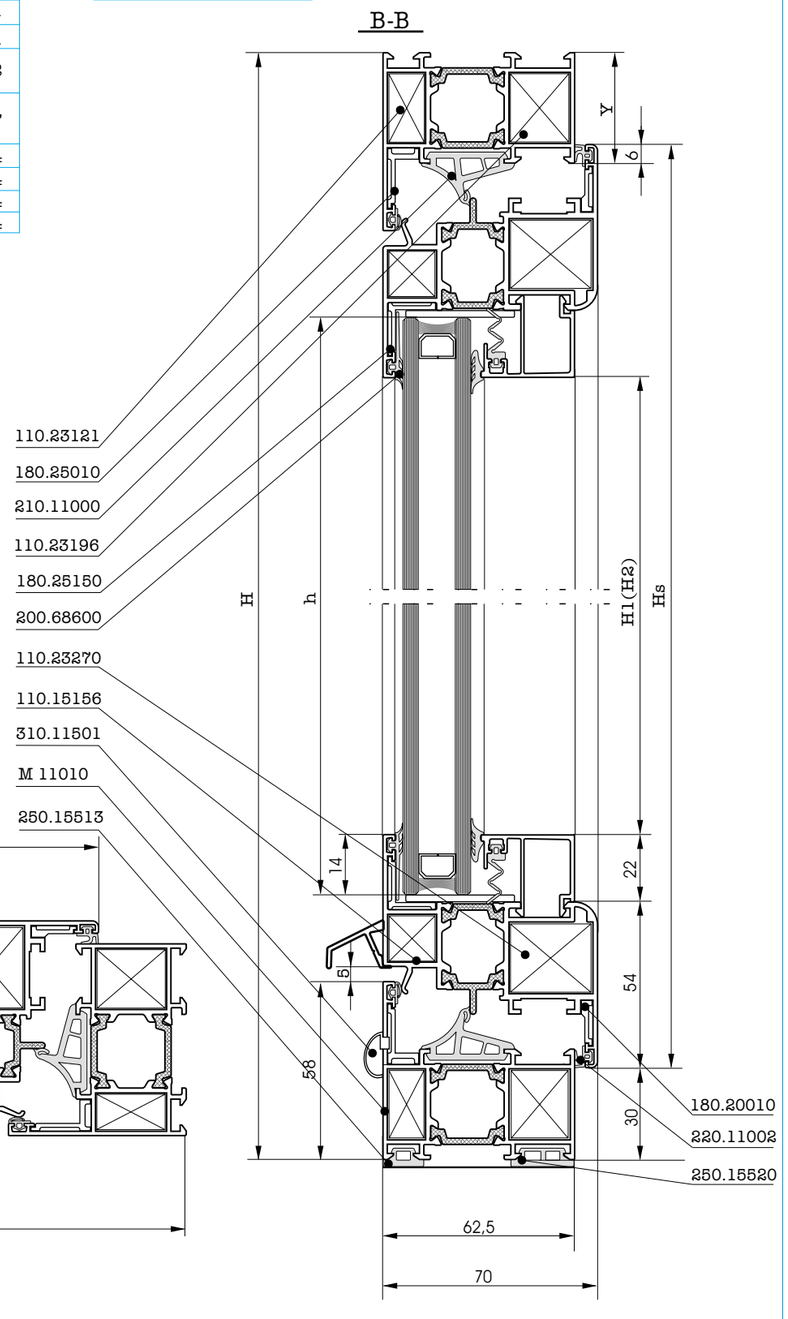

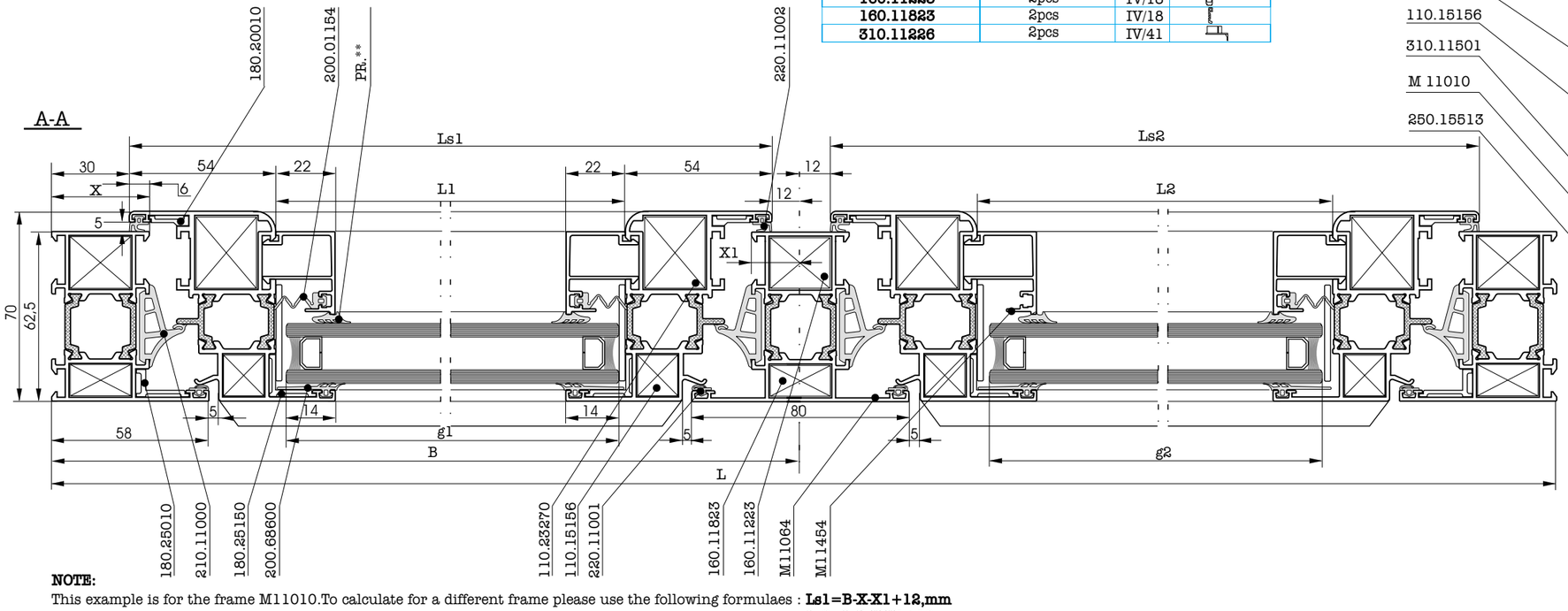

NOTE:
This example is for the frame M11010.To calculate for a different frame please use the following formulaes : **Ls1=B-X-X1+12,mm**
Ls2=L-B-X-X1+12,mm
Hs=H-2Y+12,mm

Double tilt and turn window with adjoining profile

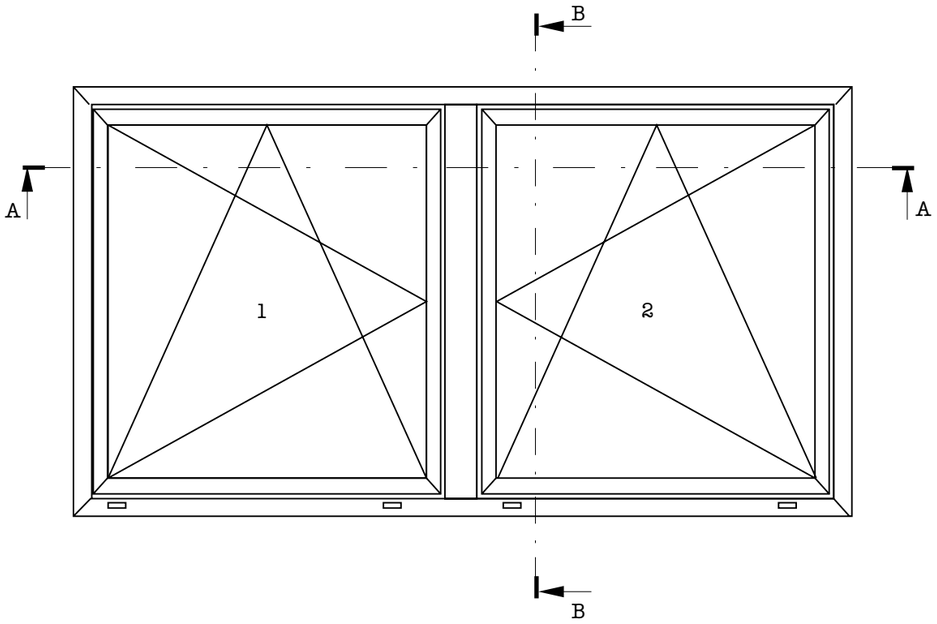

Profile		Cut	Quantity (pcs)	Dimensions (mm)	Page
M11010			2pcs	L	III/11
			2pcs	H	III/11
M11034			2pcs	Ls1=B-32,5	III/21
			2pcs	Hs1=H-60	III/21
M11034			2pcs	Ls2=L-B-32,5	III/21
			2pcs	Hs2=H-60	III/21
M9317			1pcs	Ls	III/52
M11058			1pcs	Ha=Hs-66	III/43
M11454			2pcs	L1=B-140,5	III/64
			2pcs	H1=H-212	III/64
M11454			2pcs	L2=L-B-140,5	III/64
			2pcs	H2=H-212	III/64

Glass sizes
g1=B-156,5
h1=H-184
g2=L-B-156,5
h2=H-184

Accessories	Quantity (pcs,m)	Page	View
110.23121	4pcs	IV/04	
110.23196	4pcs	IV/04	
110.15156	8pcs	IV/04	
110.23270	8pcs	IV/04	
180.25010	4pcs	IV/12	
180.25150	8pcs	IV/12	
180.20010	8pcs	IV/20	
290.00002	6-8pcs	IV/50	
310.11501	4pcs	IV/**	
210.11000	2Ls1+2Ls2+3Hs	IV/44	
200.68600	2(L1+L2)+4H1	IV/44	
200.01154	2(L1+L2)+4H1	IV/44	
PR-**	2(L1+L2)+4H1	IV/44	
220.11001	2Ls1+2Ls2+3Hs	IV/44	
220.11002	2Ls1+2Ls2+3Hs	IV/44	
250.15513	L	IV/44	
250.15520	L	IV/44	
300.11058	2pcs	IV/38	
310.11226	2pcs	IV/41	

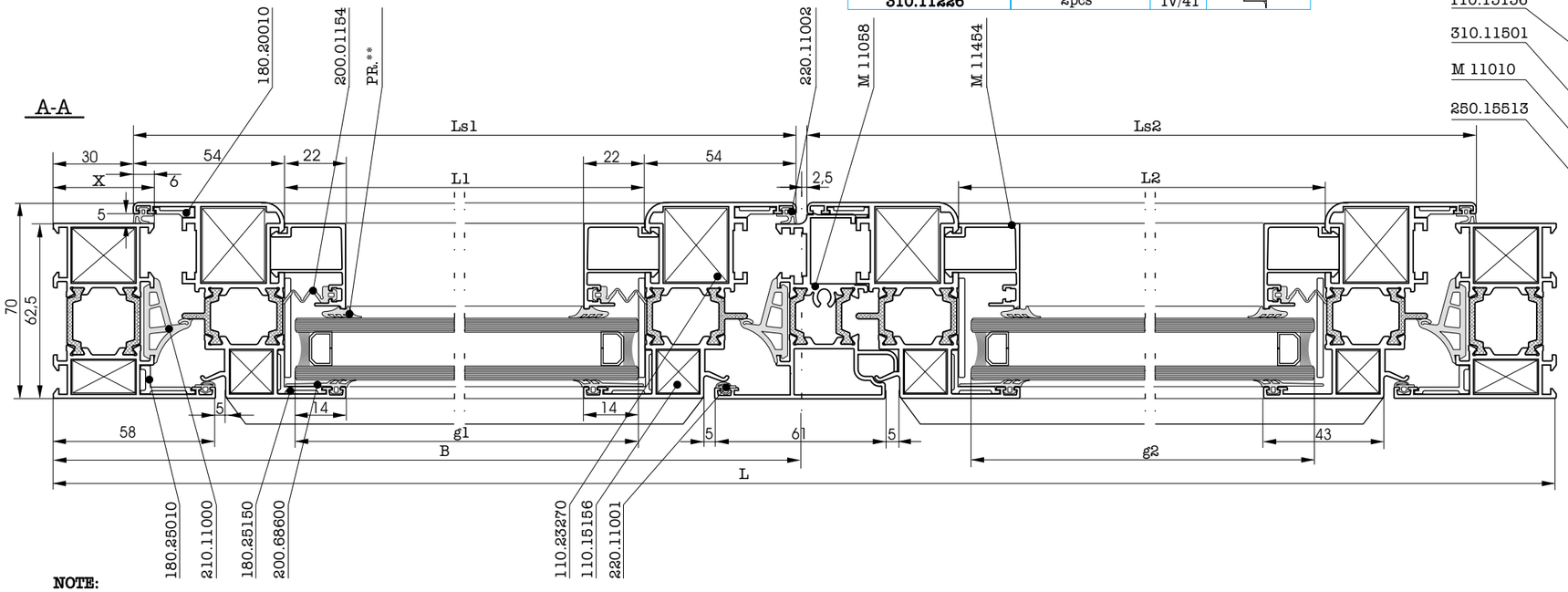

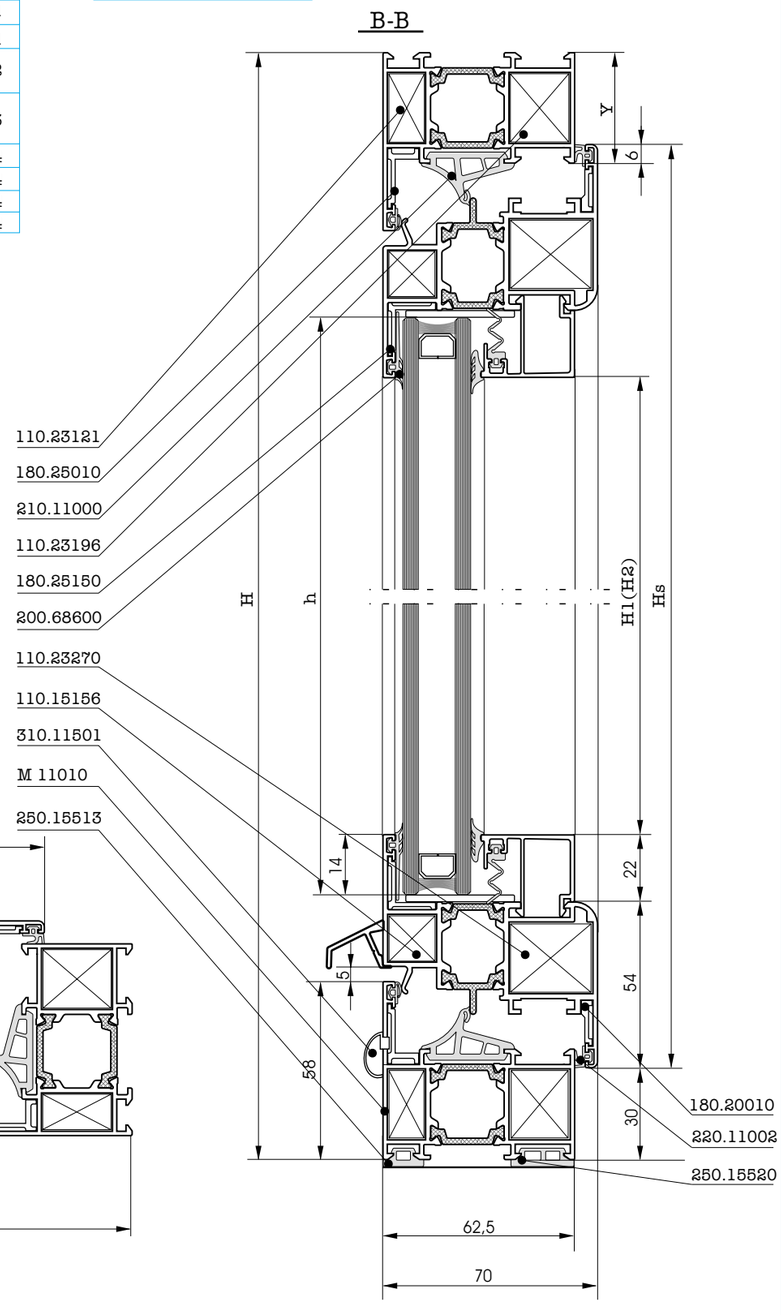

NOTE:
This example is for the frame M11010.To calculate for a different frame please use the following formulaes : **Ls1=B-X+3,5,mm**
Ls2=L-B-X+3,5,mm
Hs=H-2Y+12,mm

Tilt and slide window

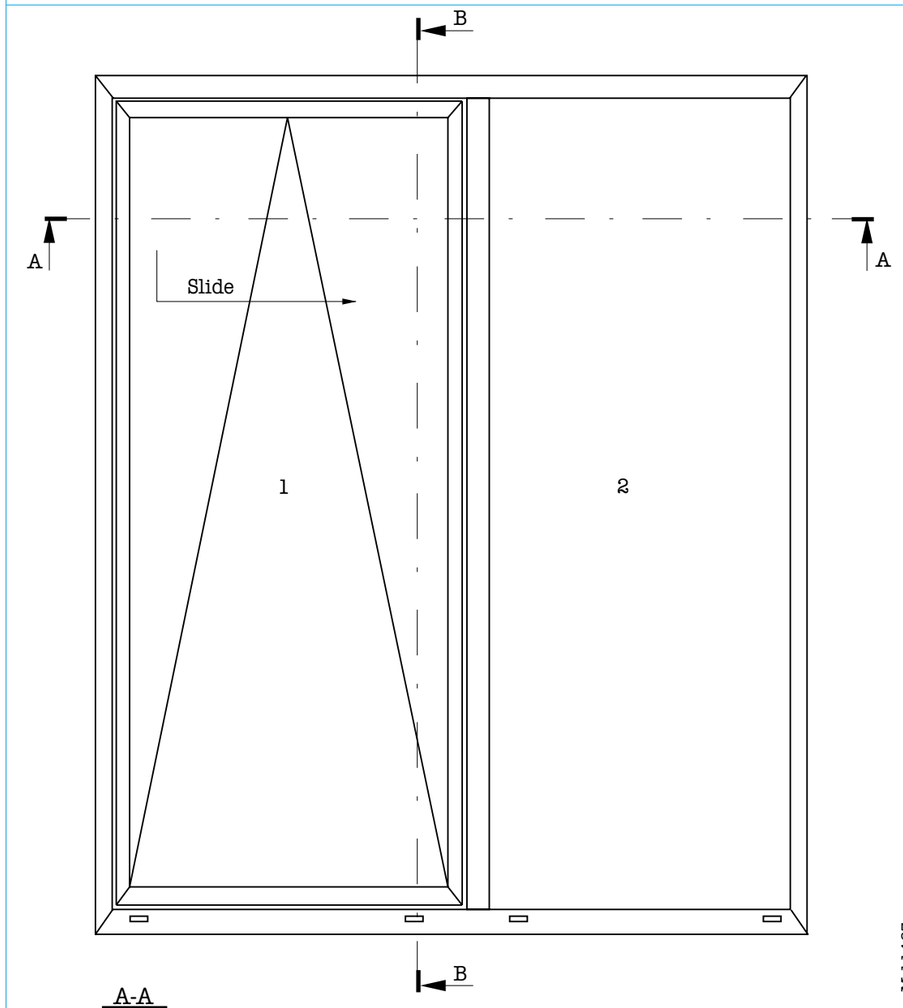

Profile		Cut	Quantity (pcs)	Dimensions (mm)	Page
M11318			2pcs	L	III/34
			2pcs	H	III/34
M11048			2pcs	Ls=B-62,5	III/22
			2pcs	Hs=H-101	III/22
M11116			1pcs	Ls	III/52
M11064			1pcs	Ht=Hs-113	III/37
M11463			2pcs	L1=B-210,5	III/64
			2pcs	H1=H-293	III/64
M11463			2pcs	L2=L-B-72,5	III/64
			2pcs	H2=H-157	III/64

Glass sizes
g1=B-226,5
h1=H-265
g2=L-B-88,5
h2=H-129

Accessories	Quantity (pcs,m)	Page	View
110.43270	8pcs	IV/05	
110.43196	4pcs	IV/05	
110.33156	4pcs	IV/05	
180.19000	4pcs	IV/14	
180.20010	4pcs	IV/14	
180.25017	4pcs	IV/12	
290.00002	5-6pcs	IV/50	
310.11501	4pcs	IV/**	
210.11000	2Ls+2Hs	IV/44	
200.68600	2(L1+H1+L2+H2)	IV/44	
200.01154	2(L1+H1+L2+H2)	IV/44	
PR-**	2(L1+H1+L2+H2)	IV/44	
220.11001	2Ls+2Hs	IV/44	
220.11002	2Ls+2Hs	IV/44	
250.15528	L	IV/44	
250.15520	L	IV/44	
160.11823	2pcs	IV/18	
160.11223	2pcs	IV/18	
310.11226	2pcs	IV/41	

B-B

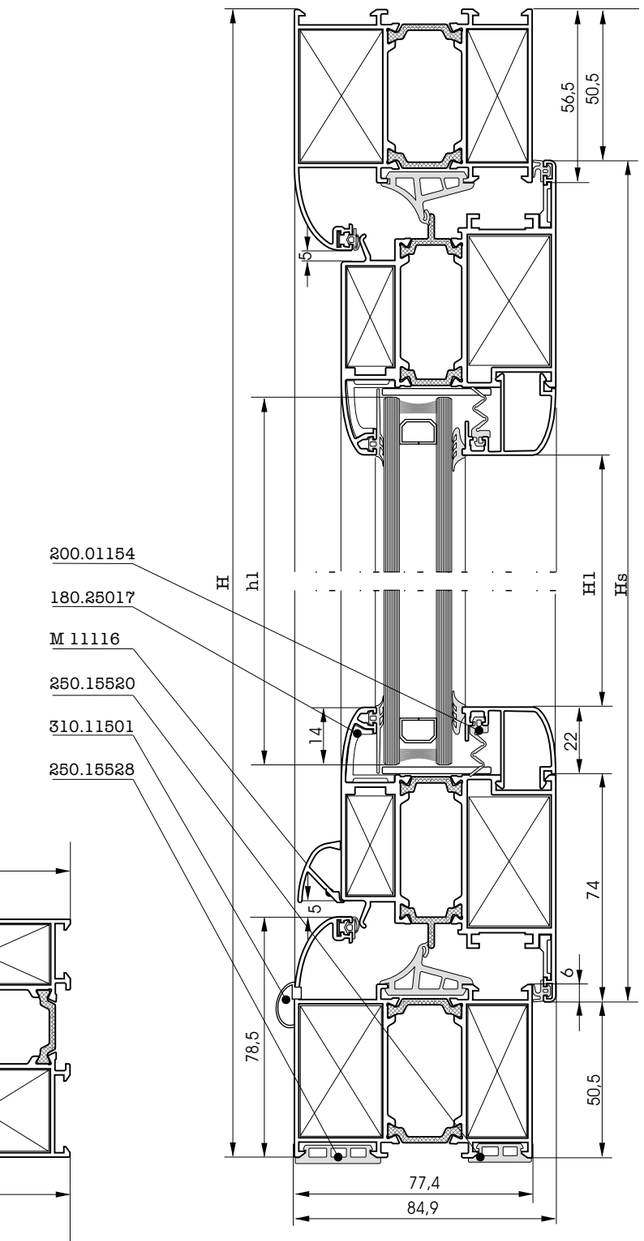

A-A

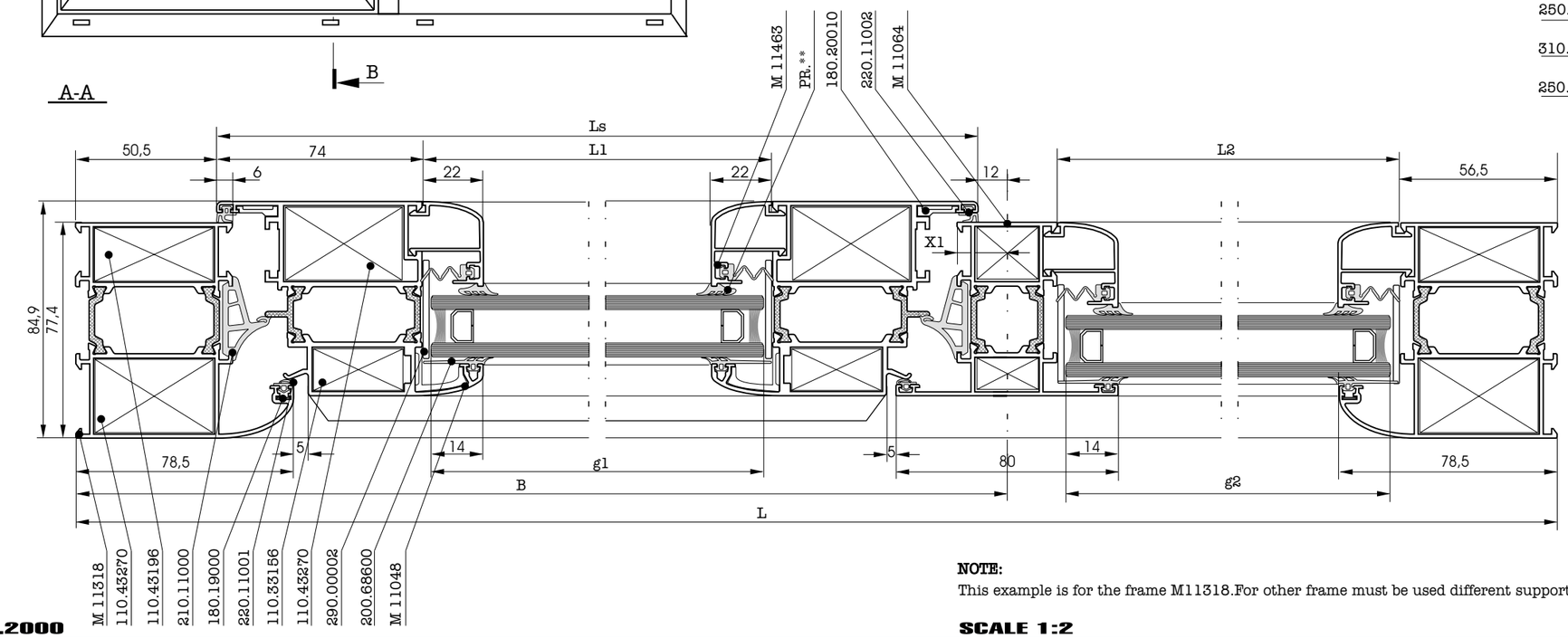

NOTE:
This example is for the frame M11318.For other frame must be used different supports.

Tilt and turn window with T-profile

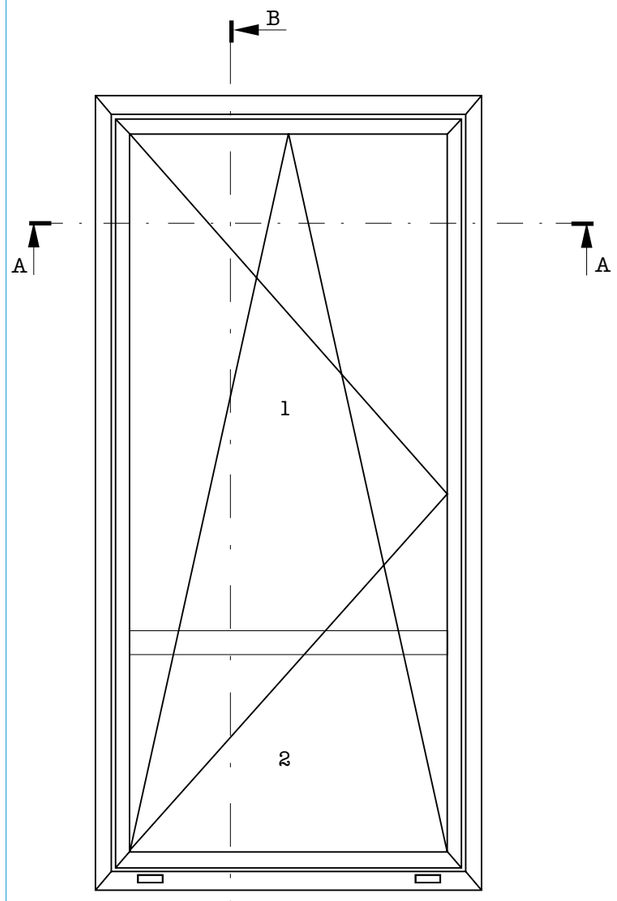

Profile		Cut	Quantity (pcs)	Dimensions (mm)	Page
M11010			2pcs	L	III/11
			2pcs	H	III/11
M11034			2pcs	Ls=L-60	III/21
			2pcs	Hs=H-60	III/21
M9317			1pcs	Ls	III/52
M11064			1pcs	Ht=H-72	III/37
M11454			2pcs	L1=L-168	III/64
			2pcs	H1=H-A-146	III/64
M11454			2pcs	L2=L-168	III/64
			2pcs	H2=A-146	III/64

Glass sizes
g1=L-184
h1=H-A-118
g2=L-184
h2=A-118

Accessories	Quantity (pcs,m)	Page	View
11023121	4pcs	IV/04	
110.23196	4pcs	IV/04	
110.15156	4pcs	IV/04	
110.23270	4pcs	IV/04	
180.25010	4pcs	IV/12	
180.25150	4pcs	IV/12	
180.19000	4pcs	IV/14	
290.00002	6pcs	IV/50	
310.11501	2pcs	IV/**	
210.11000	2Ls+2Hs	IV/44	
200.68600	2(L1+H1+H2)	IV/44	
200.01154	2(L1+H1+H2)	IV/44	
PR.**	2(L1+H1+H2)	IV/44	
220.11001	2Ls+2Hs	IV/44	
220.11002	2Ls+2Hs	IV/44	
250.15513	L	IV/44	
250.15520	L	IV/44	
160.11223	2pcs	IV/18	
160.11823	2pcs	IV/18	
310.11226	2pcs	IV/41	

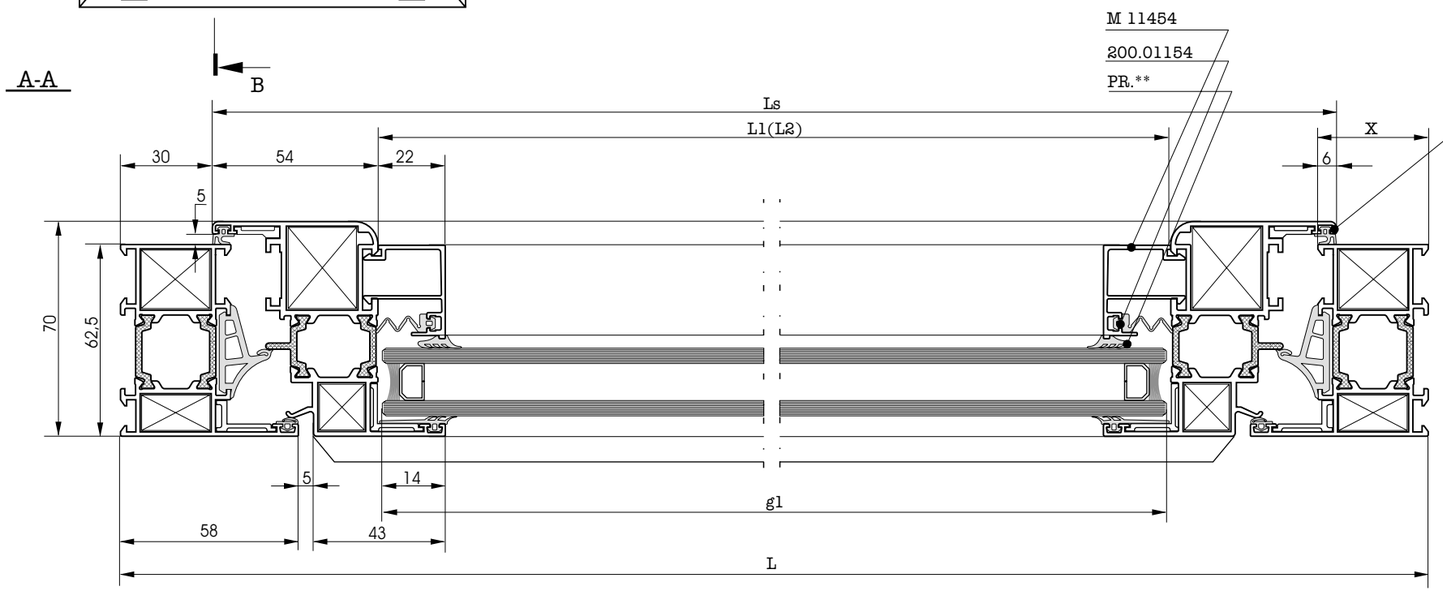

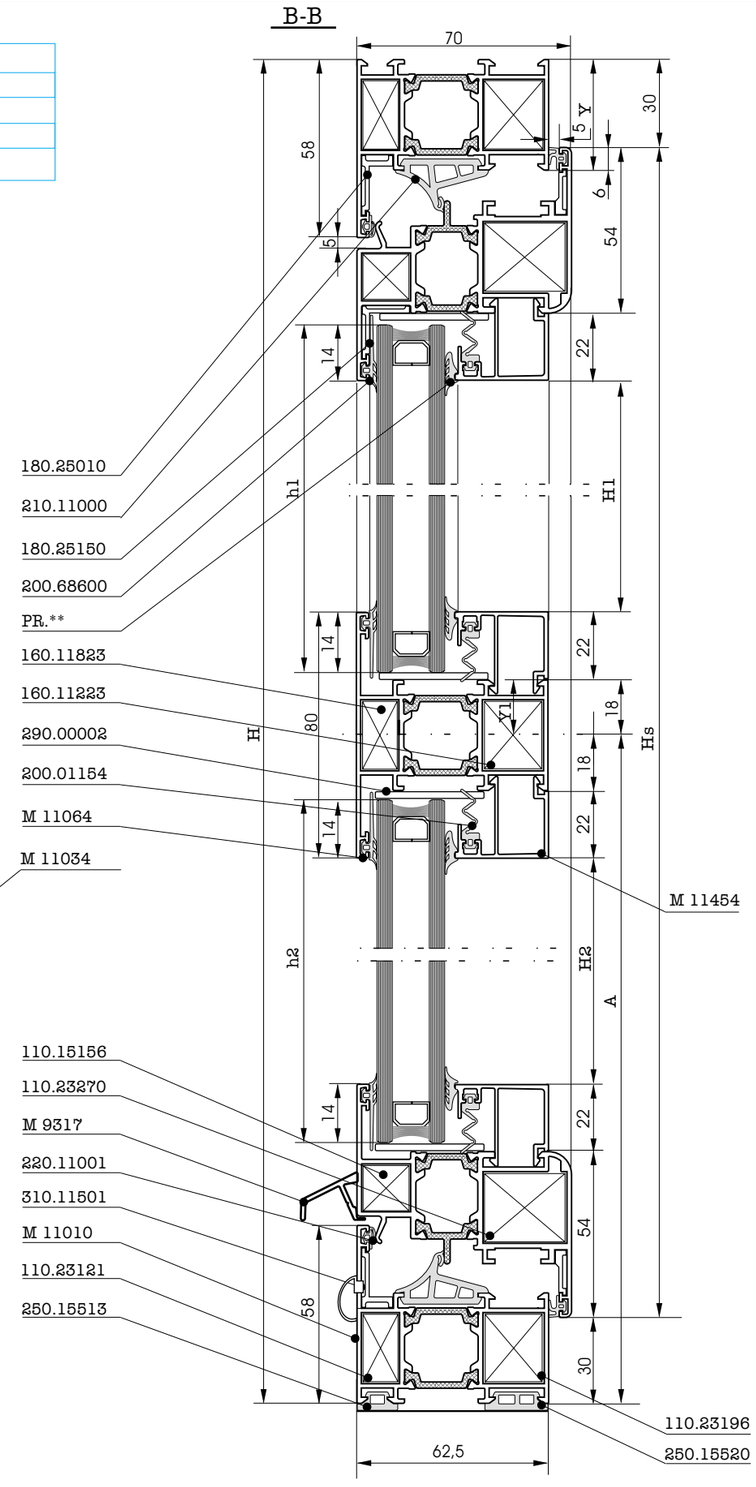

NOTE:
This example is for the frame M11010.To calculate for a different frame please use the following formulaes : **Ls=L-2X+12,mm**
Hs=H-2Y+12,mm

Pivoting window

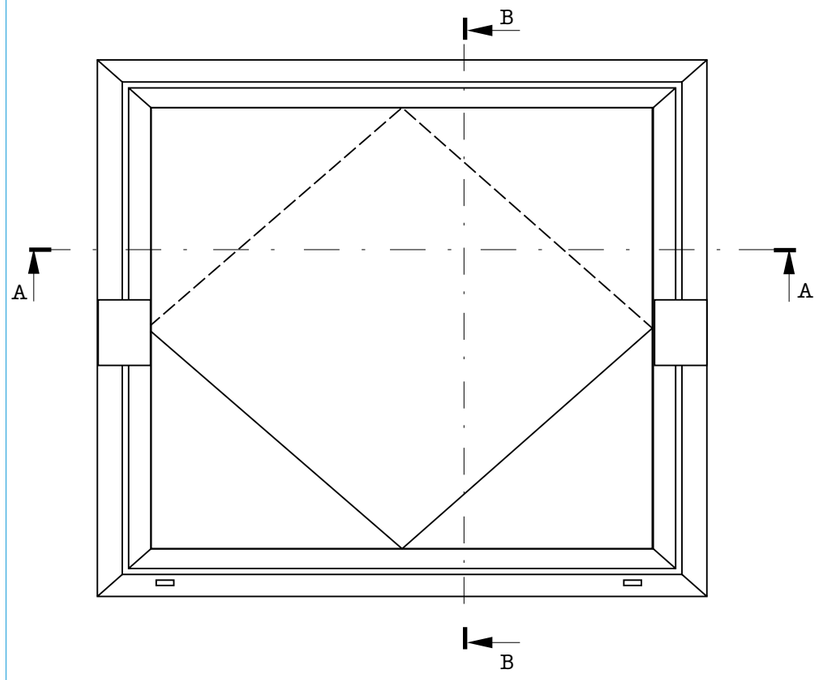

Profile		Cut	Quantity (pcs)	Dimensions (mm)	Page
M11010			2pcs	L	III/11
			2pcs	H	III/11
M11152			2pcs	Ls=L-60	III/44
			2pcs	Hs=H-60	III/44
M9317			1pcs	Ls	III/52
M11148			2pcs	B=L-126	III/44
			2pcs	A=H-126	III/44
M11454			2pcs	Ll=L-262	III/64
			2pcs	Hl=H-306	III/64

Glass sizes
gl=L-278
hl=H-278

Accessories	Quantity (pcs,m)	Page	View
110.23121	4pcs	IV/04	
110.23196	4pcs	IV/04	
110.23056	4pcs	IV/04	
110.23270	8pcs	IV/04	
180.25010	12pcs	IV/12	
110.33121	4pcs	IV/05	
180.20010	4pcs	IV/20	
290.00002	4pcs	IV/50	
310.11501	2pcs	IV/**	
200.68600	2(Ll+Hl)	IV/44	
220.11001	4B+4A	IV/44	
200.01154	2(Ll+Hl)	IV/44	
220.11002	2Ls+2Hs	IV/44	
PR.**	2(Ll+Hl)	IV/44	
250.15513	L	IV/44	
250.15520	L	IV/44	
310.11226	2pcs	IV/41	

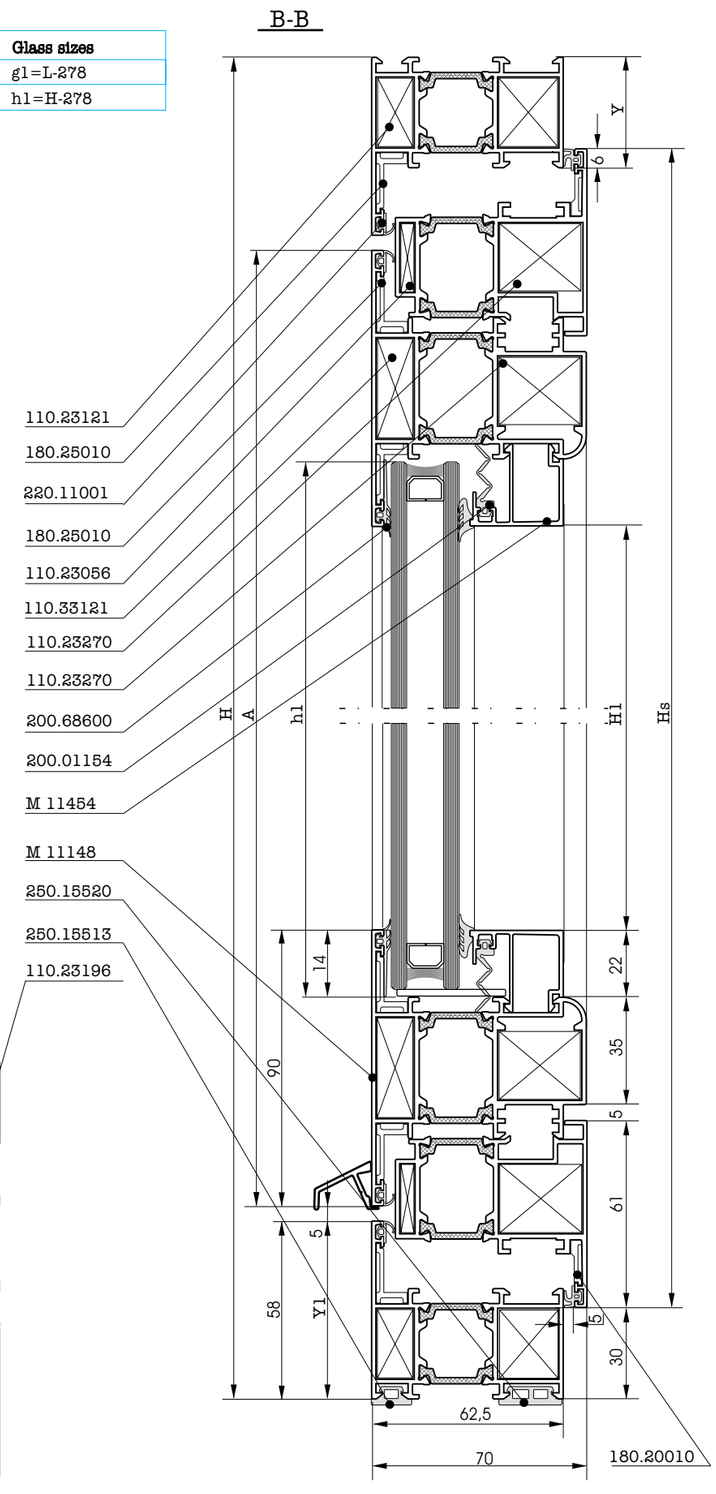

A-A

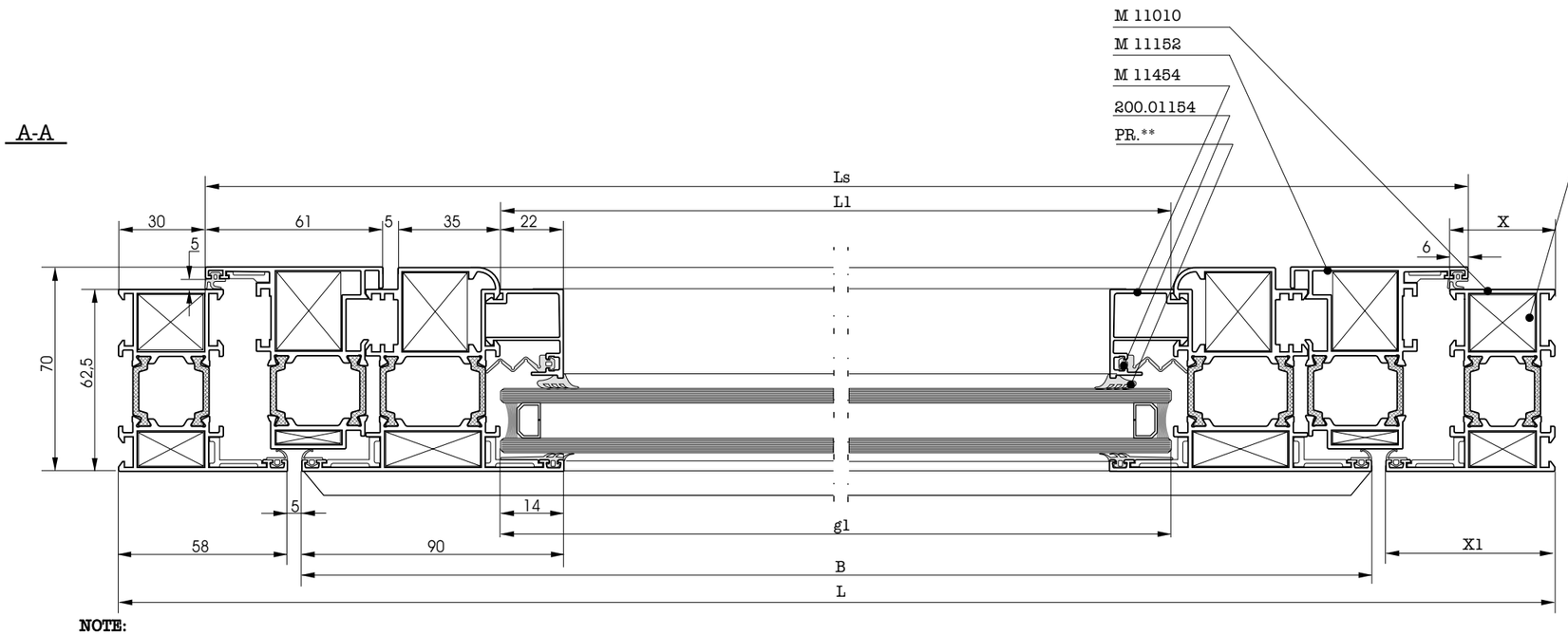

NOTE:
This example is for the frame M11010.To calculate for a different frame please use the following formulaes : **Ls=L-2X+12,mm** **Hs=H-2Y+12,mm**
B=L-2X1-10, mm **A=H-2Y1-10, mm**

Pivoting window with T-profile

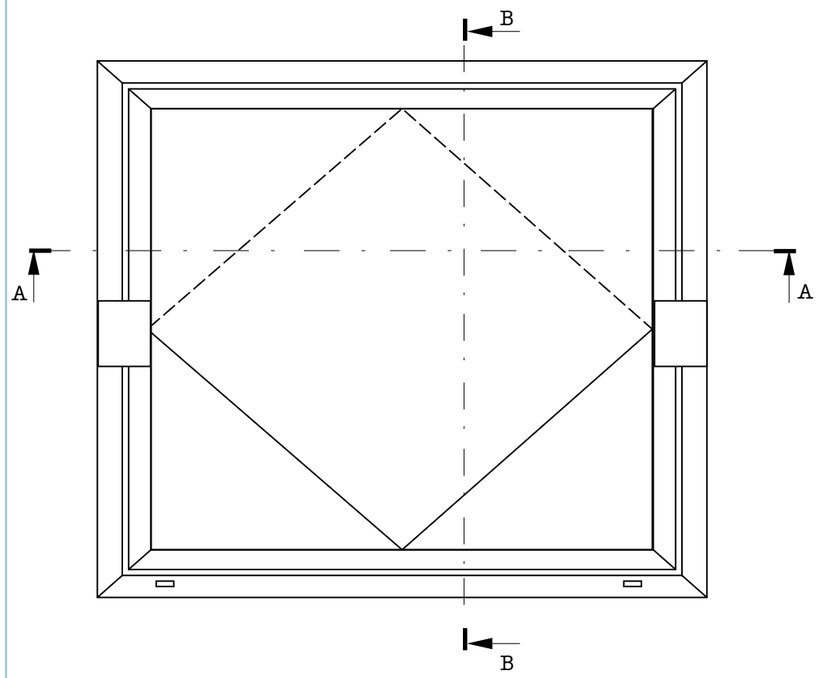

Profile		Cut	Quantity (pcs)	Dimensions (mm)	Page
M11010			2pcs	L	III/11
			2pcs	H	III/11
M11152			2pcs	Ls=L-60	III/45
			2pcs	Hs=H-60	III/45
M9317			1pcs	Ls	III/52
M11064			2pcs	B=L-126	III/37
			2pcs	A=H-126	III/37
M11454			2pcs	Ll=L-242	III/64
			2pcs	Hl=H-286	III/64

Accessories	Quantity (pcs,m)	Page	View
110.23121	8pcs	IV/04	
110.23196	8pcs	IV/04	
110.23056	4pcs	IV/04	
110.23270	4pcs	IV/04	
110.25010	12pcs	IV/12	
180.20010	4pcs	IV/20	
290.00002	4pcs	IV/50	
310.11501	2pcs	IV/**	
200.68600	2(Ll+Hl)	IV/44	
220.11001	4B+4A	IV/44	
200.01154	2(Ll+Hl)	IV/44	
220.11002	2B+2A	IV/44	
PR.**	2(Ll+Hl)	IV/44	
250.15513	L	IV/44	
250.15520	L	IV/44	
310.11226	2pcs	IV/41	

Glass sizes
gl=L-258
hl=H-258

B-B

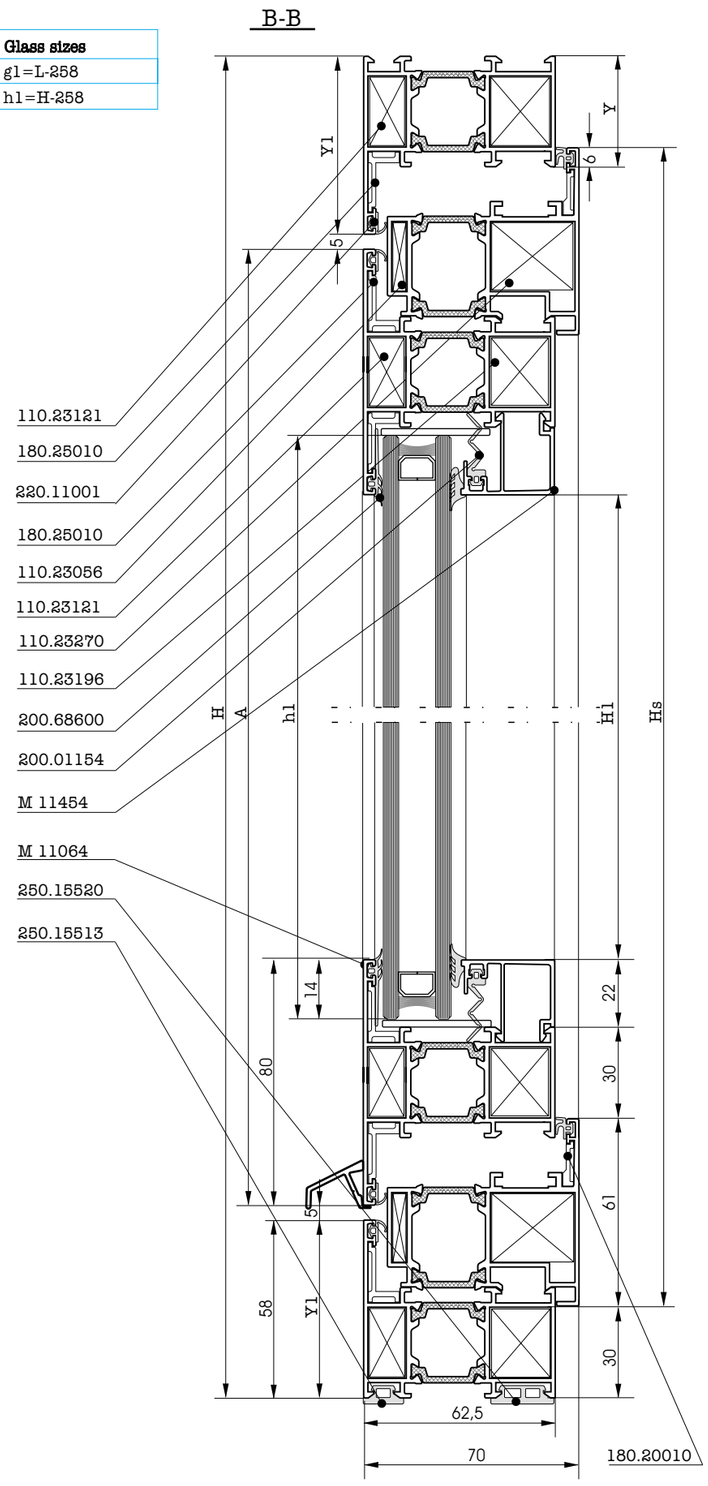

A-A

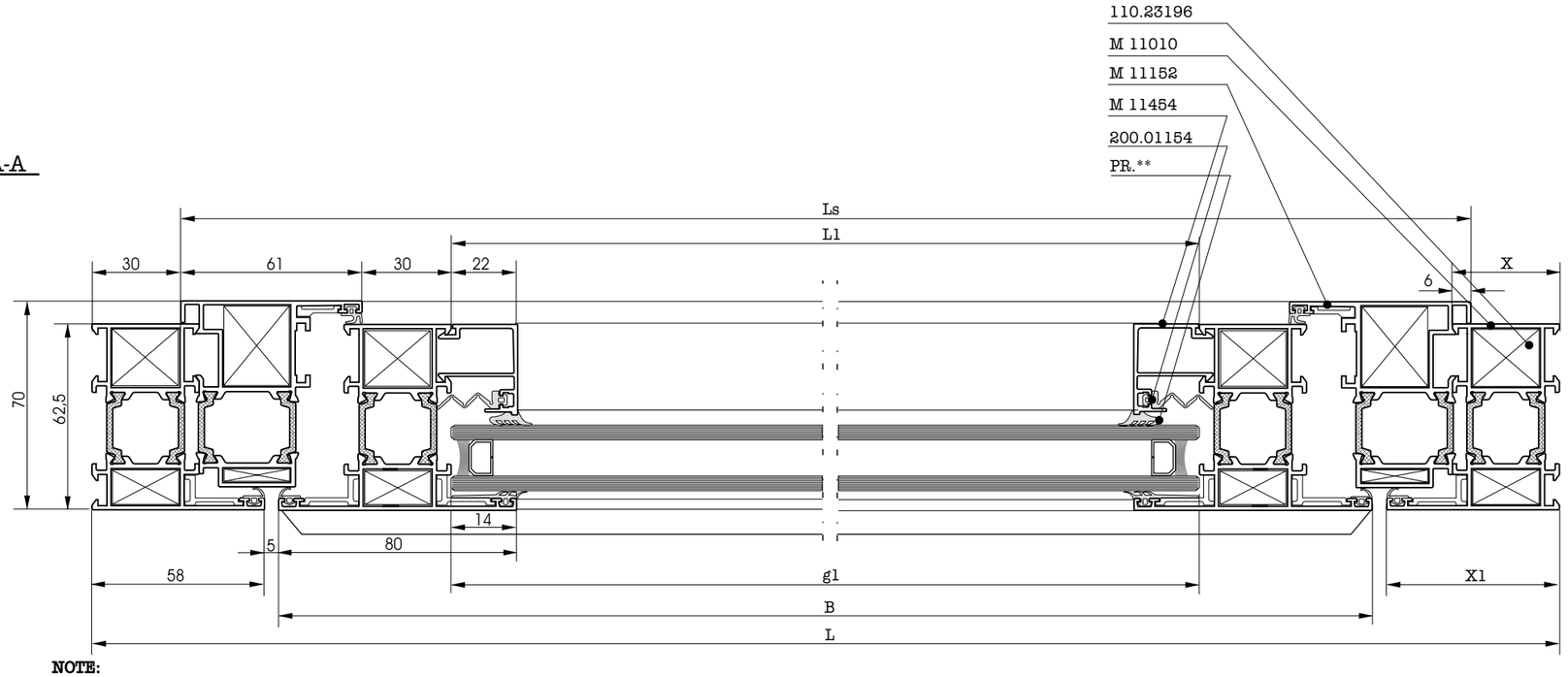

NOTE:
This example is for the frame M11010.To calculate for a different frame please use the following formulaes : **Ls=L-2X+12,mm** **Hs=H-2Y+12,mm**
B=L-2X1-10, mm **A=H-2Y1-10, mm**

Inside opening door

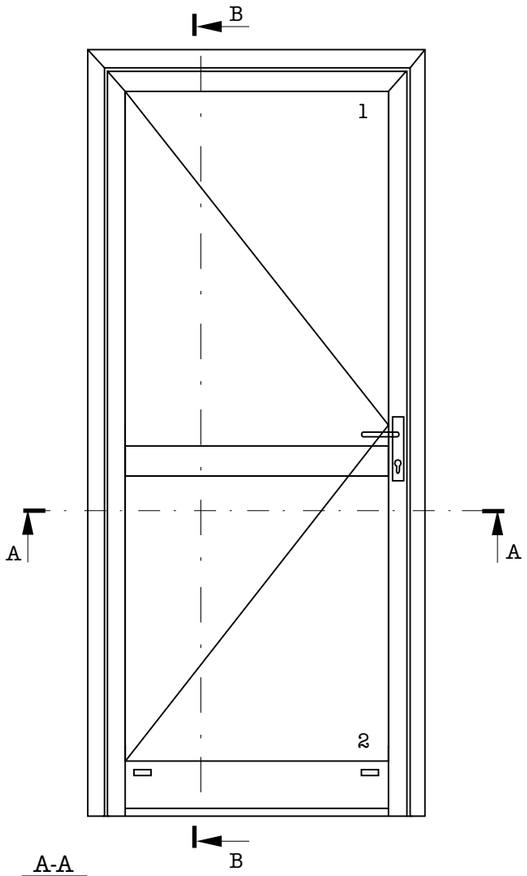

A-A

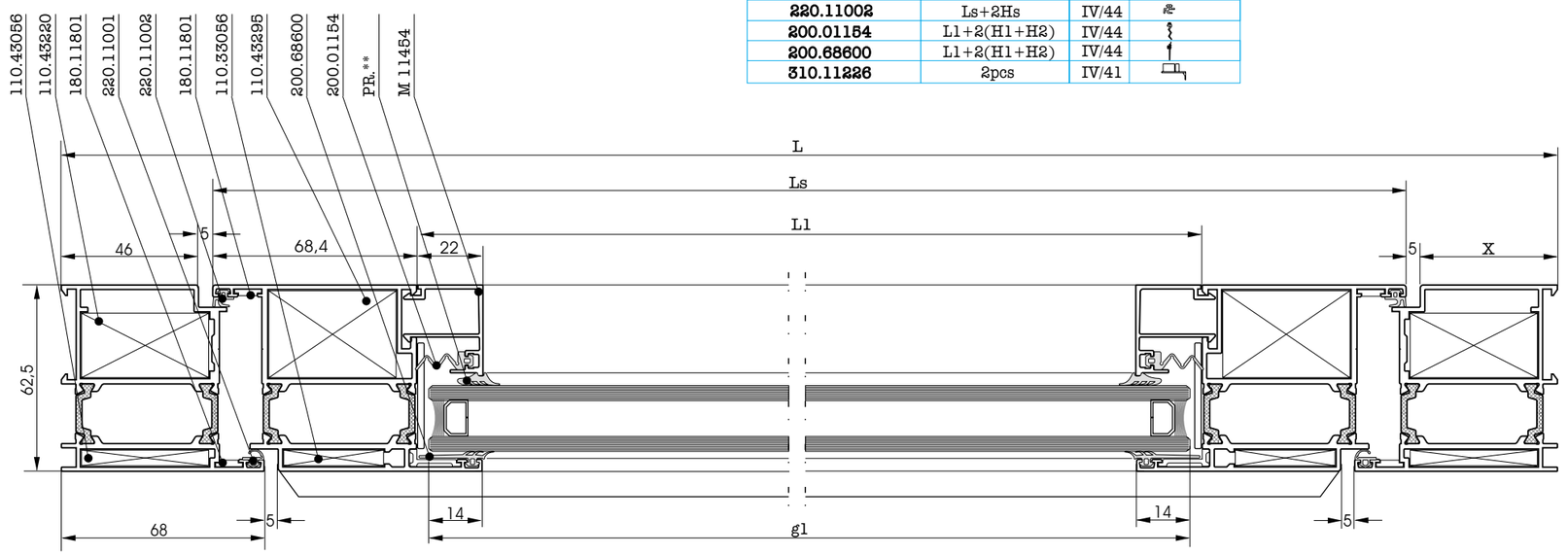

Profile		Cut	Quantity (pcs)	Dimensions (mm)	Page
M11086			1pcs	L	III/32
			1pcs	H	III/32
			1pcs	H	III/32
M11082			1pcs	Ls=L-102	III/33
			1pcs	Hs=H-61	III/33
			1pcs	Hs=H-61	III/33
M11142			1pcs	Lkp=L-238,8	III/19
M11174			1pcs	Ltf=Ls-4	III/54
M9317			1pcs	Ls	III/52
M11064			1pcs	Lt=L-238,8	III/37
M11454			4pcs	Ll=L-238,8	III/64
			2pcs	Hl=H-A-181,4	III/64
			2pcs	H2=A-202	III/64

Accessories	Quantity (pcs,m)	Page	View
110.43056	2pcs	IV/05	
11043220	2pcs	IV/05	
110.43295	2pcs	IV/05	
110.33056	2pcs	IV/05	
160.11823	2pcs	IV/18	
160.11223	2pcs	IV/18	
160.11813	2pcs	IV/18	
160.11213	2pcs	IV/18	
180.11801	4pcs	IV/11	
180.25010	2pcs	IV/12	
290.00002	5-6pcs	IV/50	
310.11501	2	IV/**	
471.00800	2	IV/47	
PR-**	Ll+2(Hl+H2)	IV/44	
220.11001	Ls+2Hs	IV/44	
220.11002	Ls+2Hs	IV/44	
200.01154	Ll+2(Hl+H2)	IV/44	
200.68600	Ll+2(Hl+H2)	IV/44	
310.11226	2pcs	IV/41	

Glass sizes
gl=L-254,8
hl=H-A-153,4
g2=L-254,8
h2=A-174

B-B

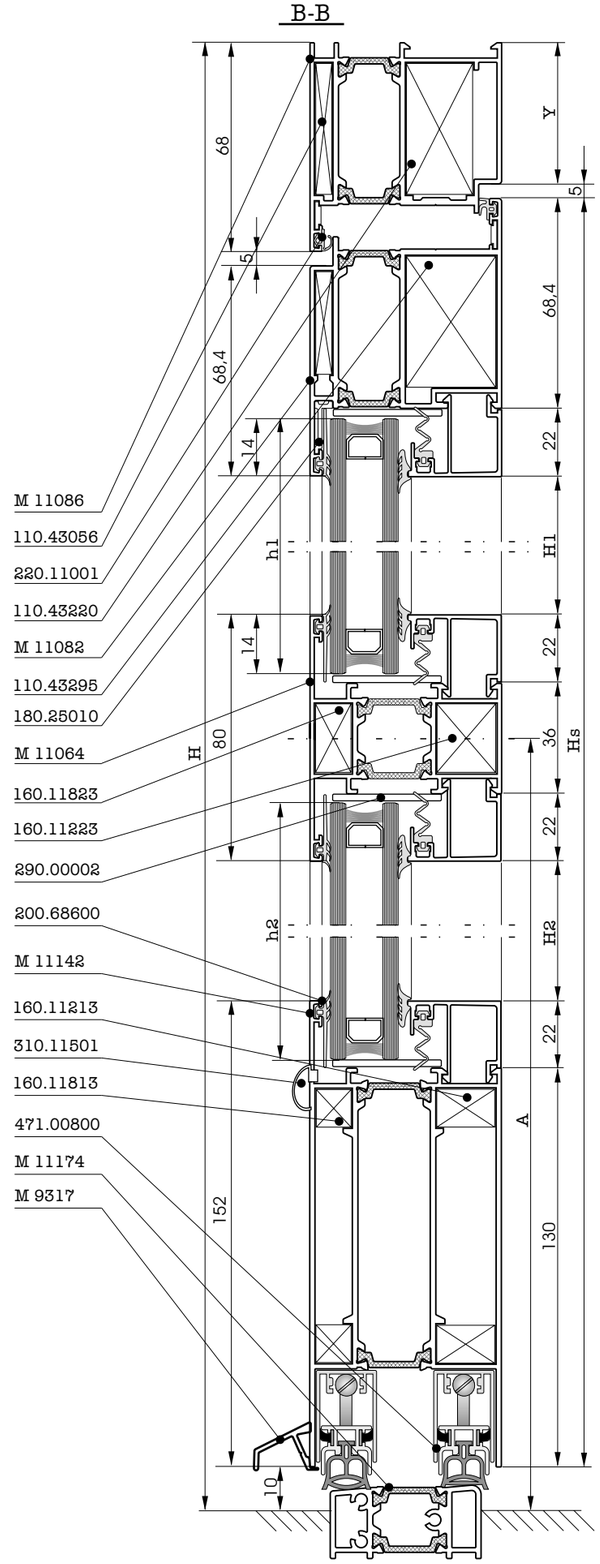

NOTE:
This example is for the frame M11086.For the other frames(M11088,M11286 and M11288) the calculations with sash M11082 are the same.

Inside opening door

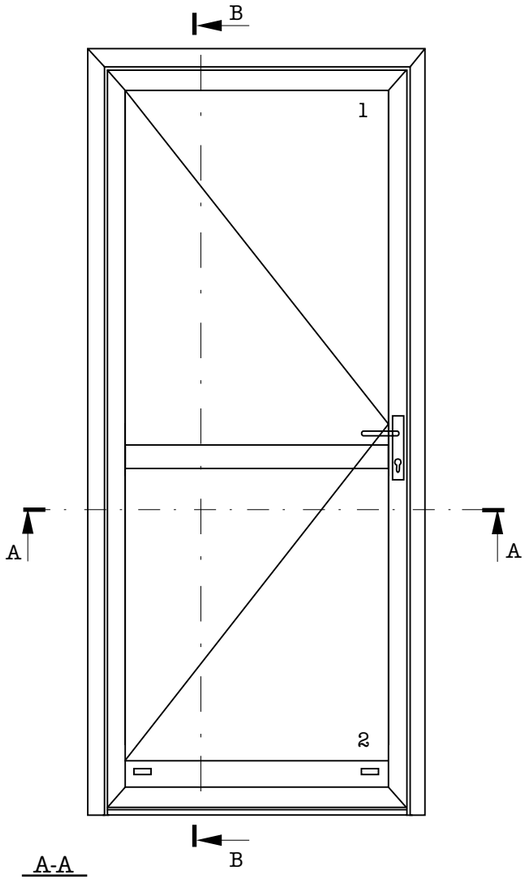

Profile		Cut	Quantity (pcs)	Dimensions (mm)	Page
M11086			1pcs	L	III/32
			1pcs	H	III/32
			1pcs	H	III/32
M11082			2pcs	Ls=L-102	III/33
			2pcs	Hs=H-57	III/33
M11144			1pcs	Lsp=L-238,8	III/32
M11274			1pcs	Ltf=Ls-35,6	III/54
M11116			1pcs	Ls	III/52
M11064			1pcs	Lt=L-238,8	III/37
M11454			4pcs	L1=L-238,8	III/64
			2pcs	H1=H-A-181,4	III/64
			2pcs	H2=A-187,8	III/64

Glass sizes
g1=L-254,8
h1=H-A-153,4
g2=L-254,8
h2=A-159,8

Accessories	Quantity (pcs,m)	Page	View
110.43056	2pcs	IV/05	
110.43220	2pcs	IV/05	
110.43295	4pcs	IV/05	
110.33056	4pcs	IV/05	
160.11823	2pcs	IV/18	
160.11223	2pcs	IV/18	
180.25010	6pcs	IV/18	
180.11801	6pcs	IV/11	
290.00002	5-6pcs	IV/50	
310.11501	2	IV/**	
250.11226	L	IV/44	
PR.**	2(L1+H1+H2)	IV/44	
220.11001	Ls+2Hs	IV/44	
220.11002	2Ls+2Hs	IV/44	
200.01154	2(L1+H1+H2)	IV/44	
200.68600	2(L1+H1+H2)	IV/44	
310.11226	2pcs	IV/41	
310.11274	2pcs	IV/41	
310.11082	2pcs	IV/41	

A-A

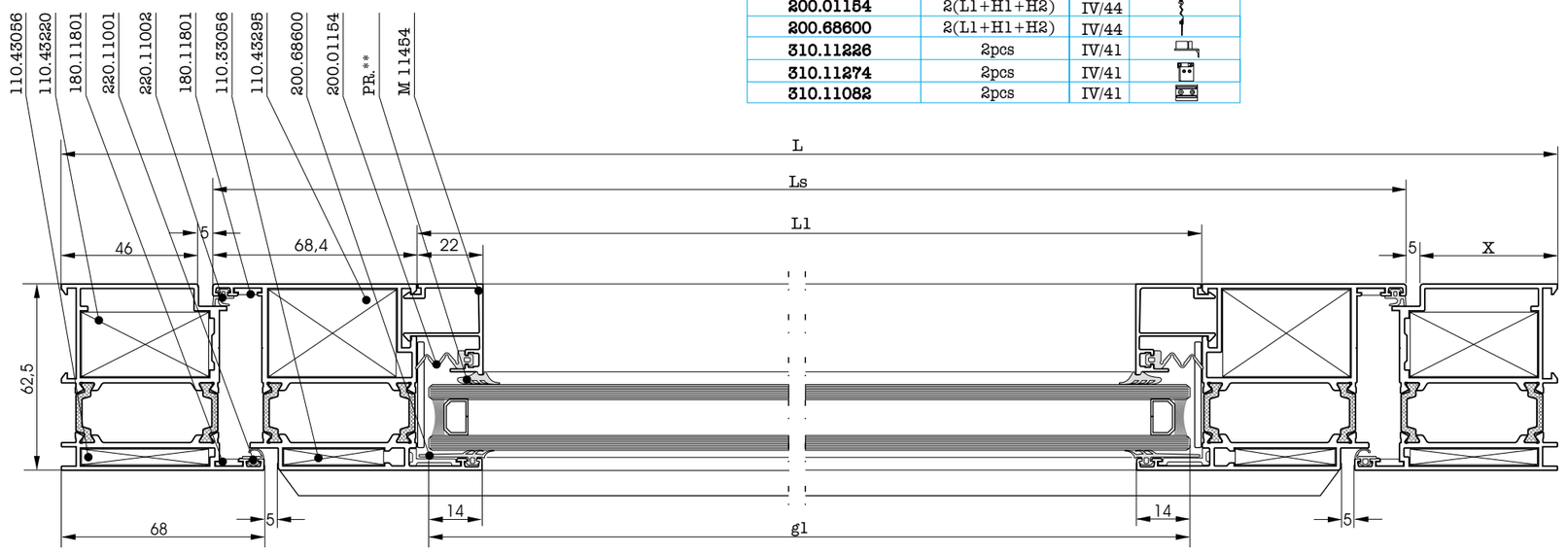

B-B

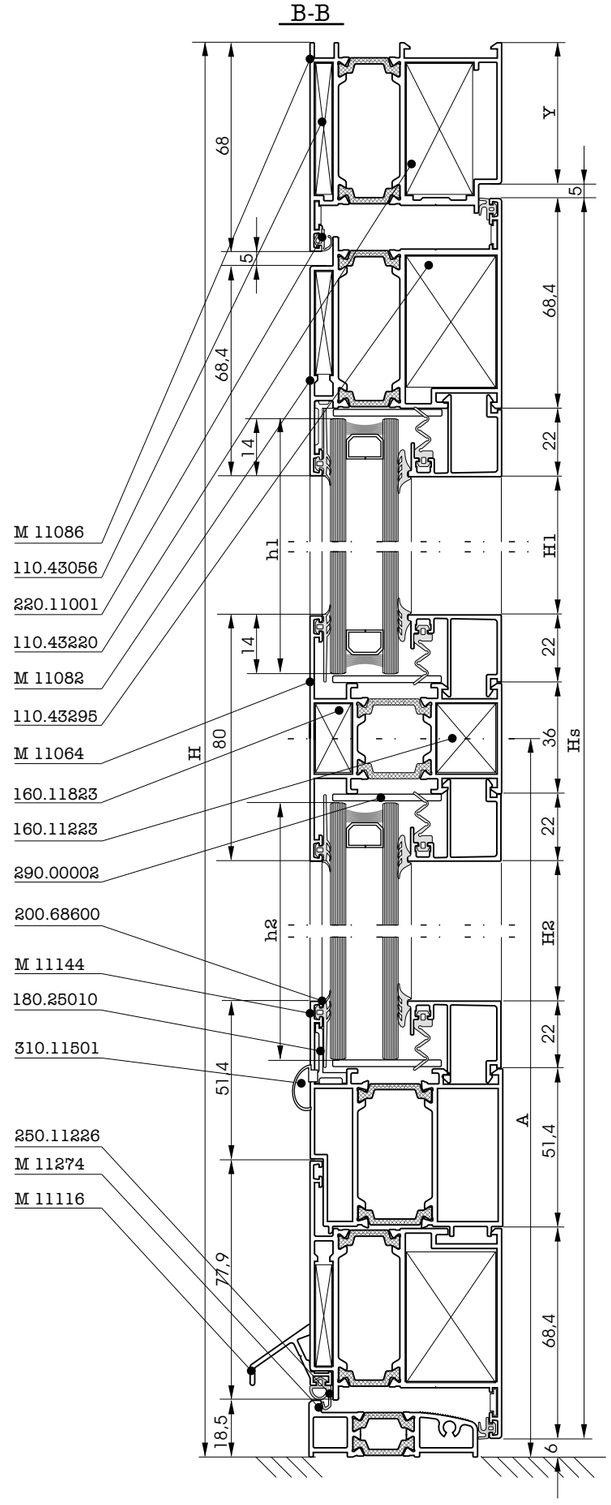

NOTE:
This example is for the frame M11086.For the other frames(M11088,M11286 and M11288) the calculations with sash M11082 are the same.

Inside opening door

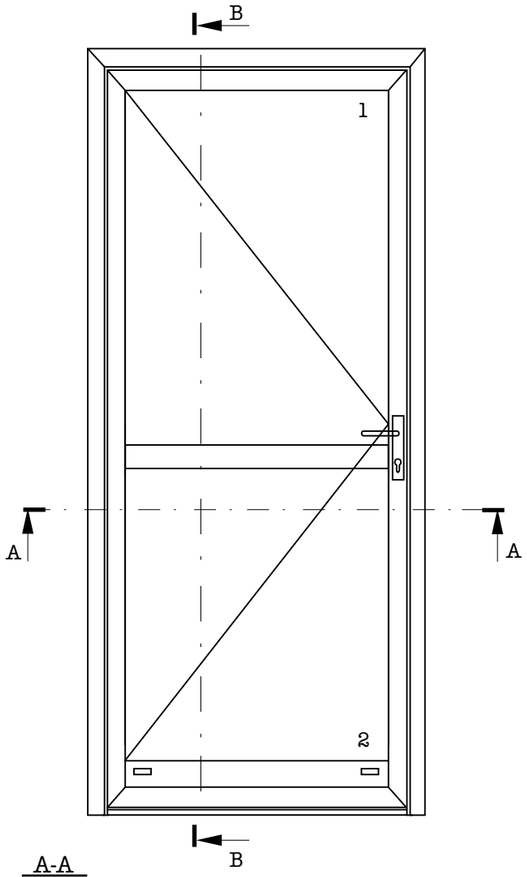

Profile		Cut	Quantity (pcs)	Dimensions (mm)	Page
M11086			1pcs	L	III/32
			1pcs	H	III/32
			1pcs	H	III/32
M11082			2pcs	Ls=L-102	III/33
			2pcs	Hs=H-61	III/33
M11144			1pcs	Lsp=L-238,8	III/32
M11174			1pcs	Ltf=Ls-4	III/54
M11170			1pcs	Ltf=Ls-4	III/53
M9317				Ls	III/52
M11064			1pcs	Lt=L-238,8	III/37
M11454			4pcs	L1=L-238,8	III/64
			2pcs	H1=H-A-181,4	III/64
			2pcs	H2=A-191,8	III/64

Glass sizes
g1=L-254,8
h1=H-A-153,4
g2=L-254,8
h2=A-163,8

Accessories	Quantity (pcs,m)	Page	View
110.13056	2pcs	IV/05	
110.43220	2pcs	IV/05	
110.43295	4pcs	IV/05	
110.33056	4pcs	IV/05	
160.11823	2pcs	IV/18	
160.11223	2pcs	IV/18	
180.25010	6pcs	IV/18	
180.11801	6pcs	IV/11	
290.00002	5-6pcs	IV/50	
310.11501	2	IV/**	
620.02012	2Ls	IV/45	
PR.**	2(L1+H1+H2)	IV/44	
220.11001	Ls+2Hs	IV/44	
220.11002	Ls+2Hs	IV/44	
200.01154	2(L1+H1+H2)	IV/44	
200.68600	2(L1+H1+H2)	IV/44	
310.11226	2pcs	IV/41	
310.11170	2pcs	IV/40	

A-A

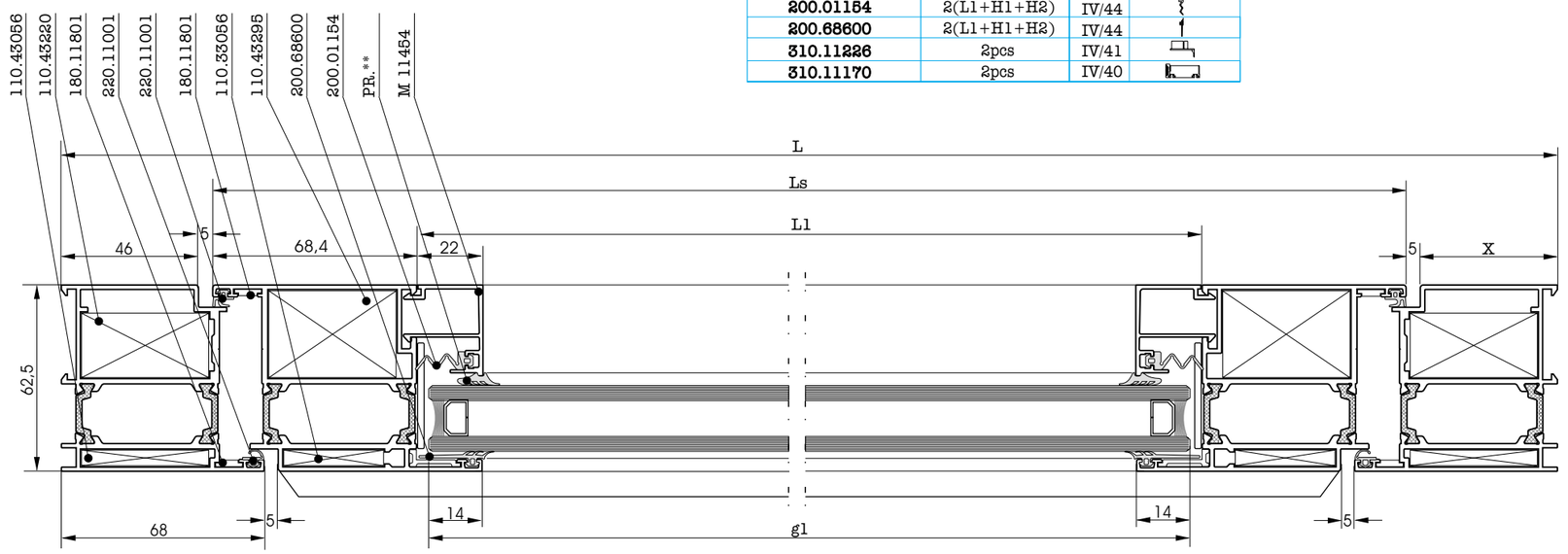

B-B

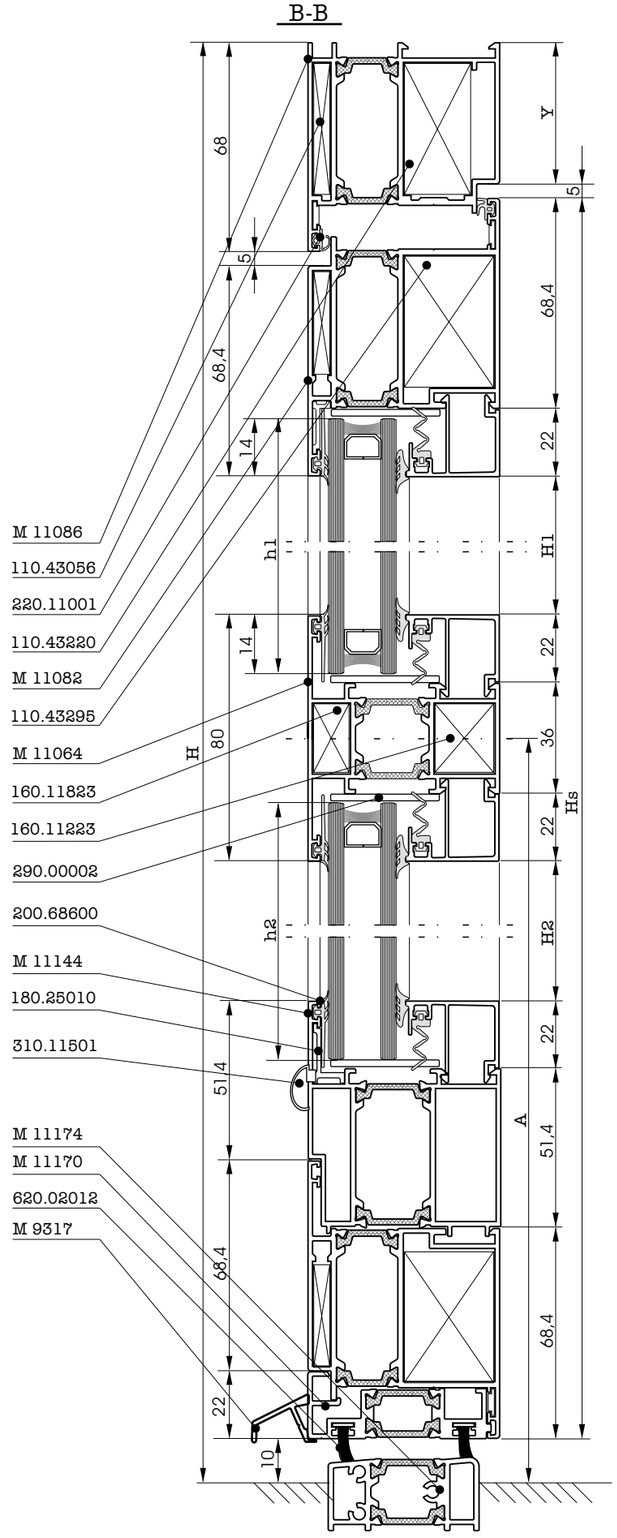

NOTE:
This example is for the frame M11086.For the other frames(M11088,M11286 and M11288) the calculations with sash M11082 are the same.

Outside opening door

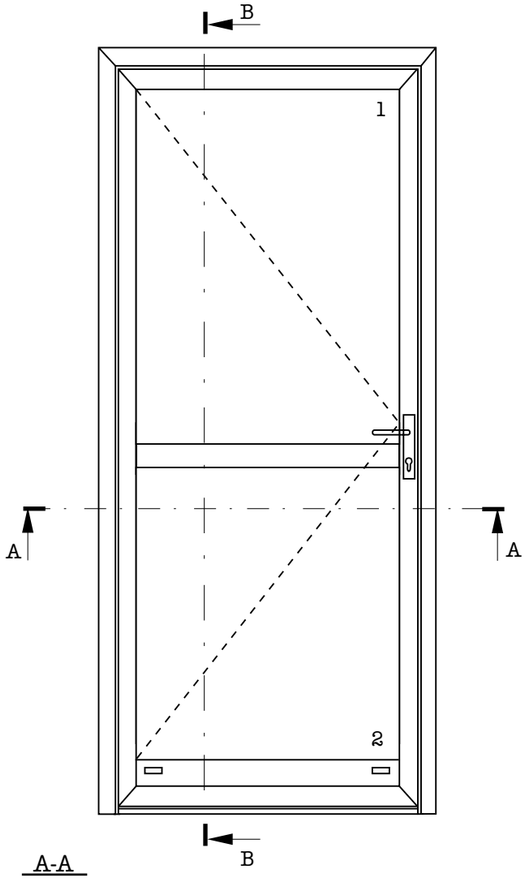

Profile		Cut	Quantity (pcs)	Dimensions (mm)	Page
M11088			1pcs	L	III/32
			1pcs	H	III/32
			1pcs	H	III/32
M11084			2pcs	Ls=L-102	III/33
			2pcs	Hs=H-66	III/33
M11172			1pcs	Ltf=Ls-4	III/54
M11170			1pcs	Ltf=Ls-4	III/53
M9317			1pcs	Ls	III/52
M11064			1pcs	Lt=L-238,8	III/37
M11454			4pcs	Ll=L-238,8	III/64
			2pcs	Hl=H-A-181,4	III/64
			2pcs	H2=A-145,4	III/64

Glass sizes
gl=L-254,8
hl=H-A-153,4
g2=L-254,8
h2=A-117,4

Accessories	Quantity (pcs,m)	Page	View
110.43295	2pcs	IV/05	
110.33056	2pcs	IV/05	
110.43220	4pcs	IV/05	
110.43056	4pcs	IV/05	
160.11823	2pcs	IV/18	
160.11223	2pcs	IV/18	
180.25005	4pcs	IV/18	
180.11801	6pcs	IV/11	
290.00002	5-6pcs	IV/50	
310.11501	2	IV/**	
620.02012	2Ls	IV/45	
PR-**	2(Ll+Hl+H2)	IV/44	
220.11001	Ls+2Hs	IV/44	
220.11002	Ls+2Hs	IV/44	
200.01154	2(Ll+Hl+H2)	IV/44	
200.68600	2(Ll+Hl+H2)	IV/44	
310.11226	2pcs	IV/41	
310.11170	2pcs	IV/40	

A-A

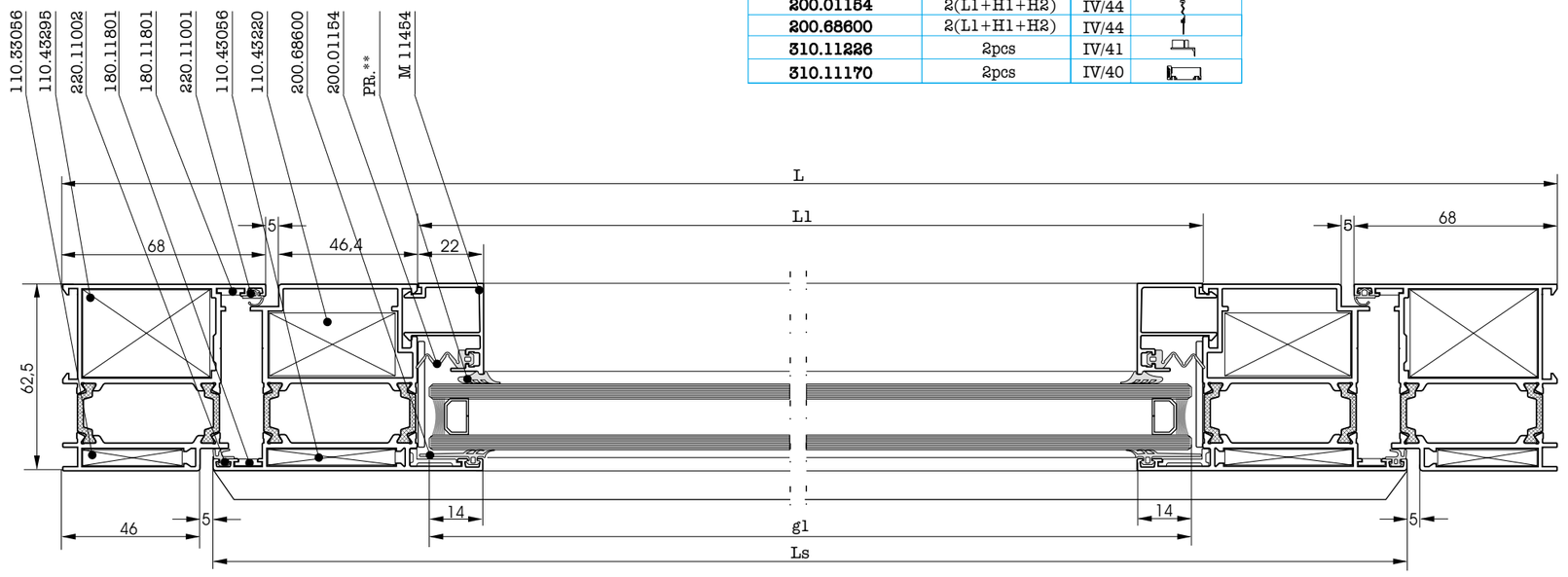

B-B

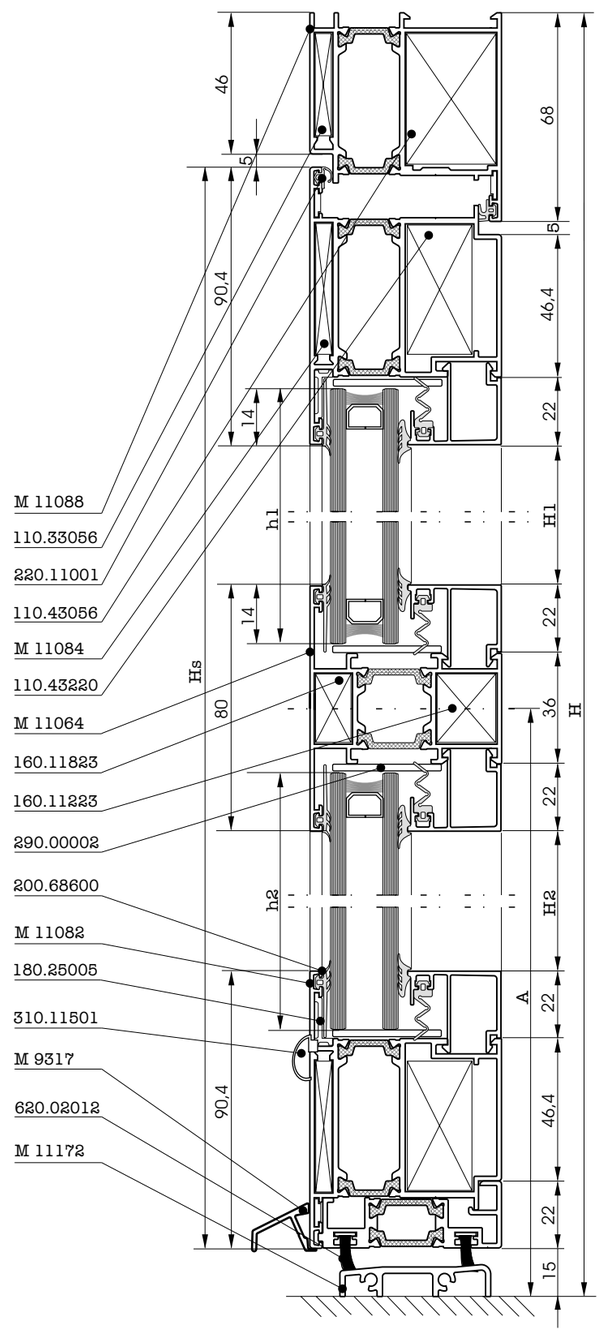

Outside opening door

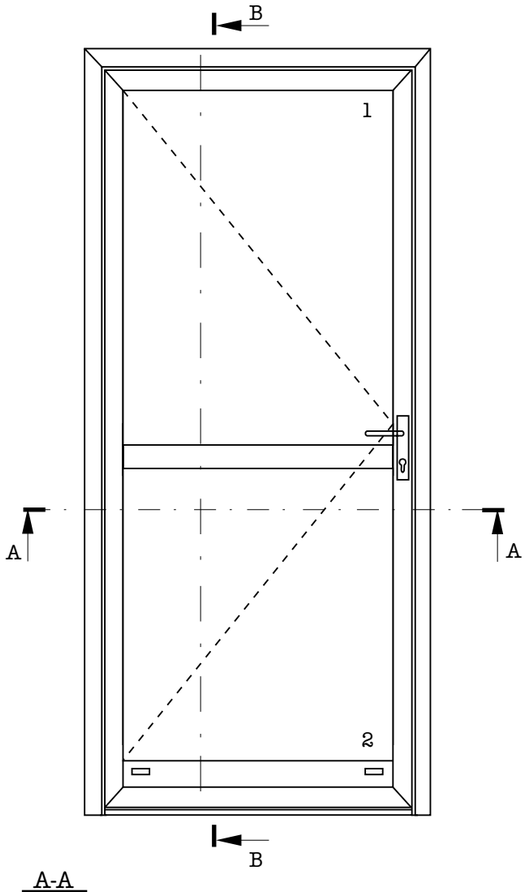

A-A

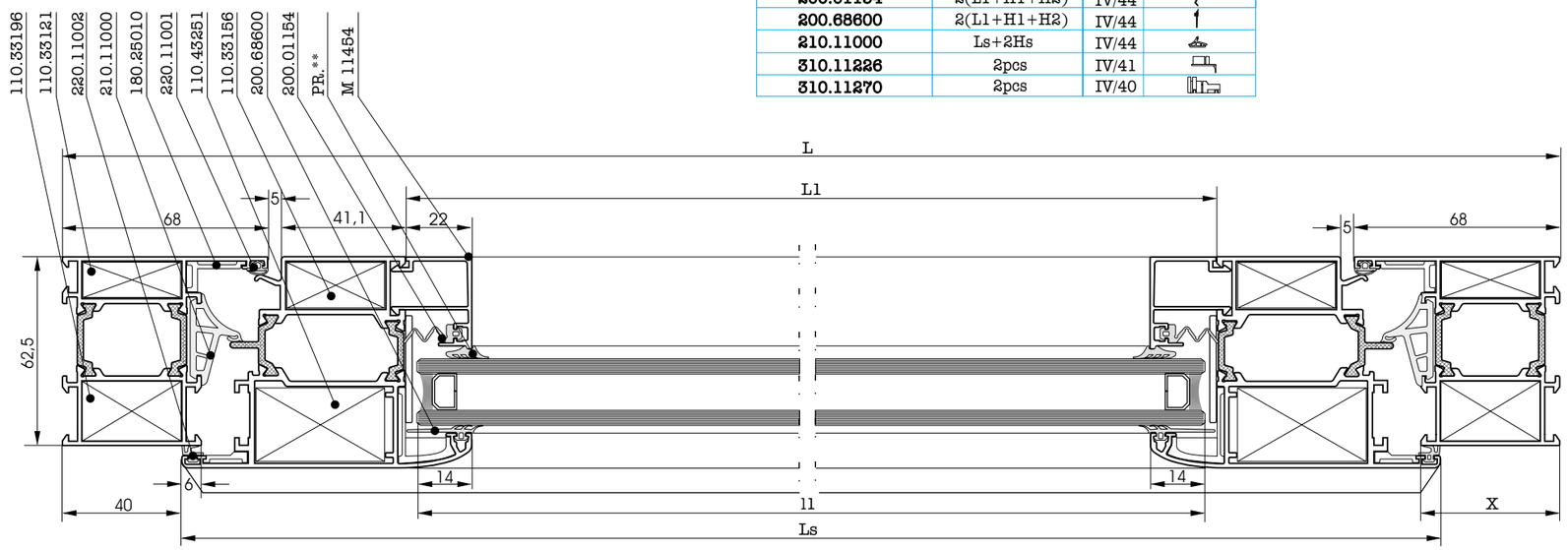

Profile		Cut	Quantity (pcs)	Dimensions (mm)	Page
M11014			1pcs	L	III/11
			1pcs	H	III/11
			1pcs	H	III/11
M11190			2pcs	Ls=L-80	III/29
			2pcs	Hs=H-55	III/29
M11172			1pcs	Ltf=Ls-4	III/54
M11270			1pcs	Ltf=Ls-4	III/53
M9317			1pcs	Ls	III/52
M11064			1pcs	Lt=L-228,2	III/37
M11454			4pcs	Ll=L-228,2	III/64
			2pcs	Hl=H-A-176,1	III/64
			2pcs	H2=A-150,9	III/64

Accessories	Quantity (pcs,m)	Page	View
110.33196	2pcs	IV/05	
110.33121	2pcs	IV/05	
110.43251	4pcs	IV/05	
110.33156	4pcs	IV/05	
160.11823	2pcs	IV/18	
160.11223	2pcs	IV/18	
180.25010	2pcs	IV/12	
180.25017	4pcs	IV/13	
180.20010	4pcs	IV/14	
290.00002	5-6pcs	IV/50	
310.11501	2	IV/**	
620.02012	2L	IV/45	
PR.**	2(Ll+Hl+H2)	IV/44	
220.11001	Ls+2Hs	IV/44	
220.11002	Ls+2Hs	IV/44	
200.01154	2(Ll+Hl+H2)	IV/44	
200.68600	2(Ll+Hl+H2)	IV/44	
210.11000	Ls+2Hs	IV/44	
310.11226	2pcs	IV/41	
310.11270	2pcs	IV/40	

Glass sizes
ll=L-244,8
hl=H-A-148,1
l2=L-244,8
h2=A-122,9

B-B

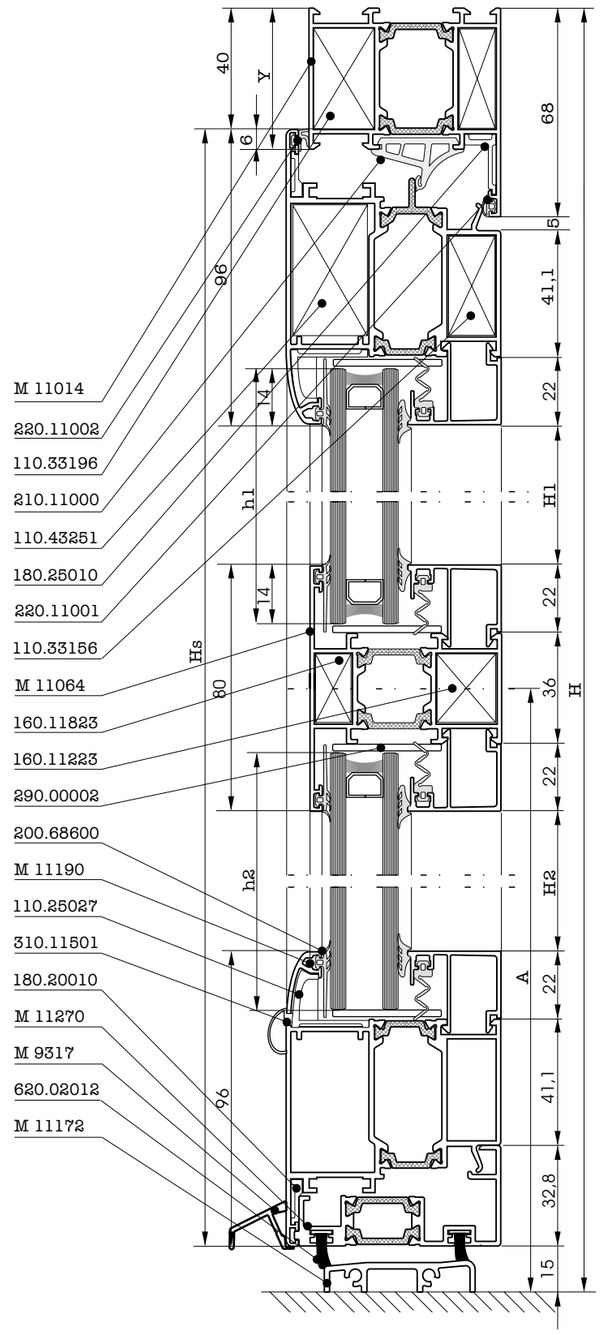

NOTE:
This example is for the frame M11014.To calculate for a different frame please use the following formulaes: **Ls=L-2X+12**
Hs=H-Y-9

Inside opening door

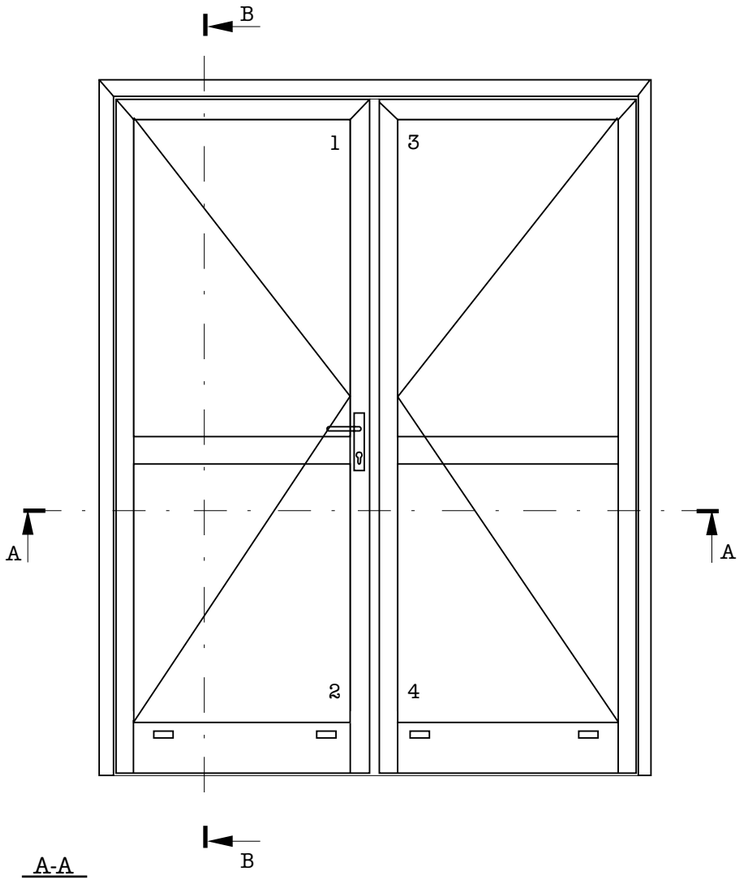

Profile		Cut	Quantity (pcs)	Dimensions (mm)	Page
M11086			1pcs	L	III/32
			1pcs	H	III/32
			1pcs	H	III/32
M11082			2pcs	Ls1=B-53,5	III/33
			2pcs	Ls2=L-B-53,5	III/33
			2pcs	Hs=H-61	III/33
			2pcs	Hs=H-61	III/33
M11142			1pcs	Lkp2=B-190,3	III/19
			1pcs	Lkp4=L-B-190,3	III/19
M11174			1pcs	Ltf=Ls1+Ls2+1	III/54
M11156			1pcs	Hap=Hs-20	III/46
M9317			1pcs	Ls2	III/52
			1pcs	Ls4	III/52
M11064			1pcs	Lt1=B-190,3	III/37
			1pcs	Lt2=L-B-190,3	III/37
M11454			4pcs	L1=B-190,3	III/64
			4pcs	L2=L-B-190,3	III/64
			4pcs	H1=H-A-181,4	III/64
			4pcs	H2=A-202	III/64

Glass sizes
g1=B-206,3
h1=H-A-153,4
g2=L-B-206,3
h2=A-174
g3=B-206,3
h3=H-A-153,4
g4=L-B-206,3
h4=A-174

Accessories	Quantity (pcs,m)	Page	View
110.43056	2pcs	IV/05	
110.43220	2pcs	IV/05	
110.43295	4pcs	IV/05	
110.33056	4pcs	IV/05	
160.11823	4pcs	IV/18	
160.11223	4pcs	IV/18	
160.11813	4pcs	IV/18	
160.11223	4pcs	IV/18	
180.11801	6pcs	IV/11	
180.25010	4pcs	IV/18	
290.00002	12pcs	IV/50	
310.11501	4pcs	IV/**	
471.00800	4pcs	IV/47	
PR-**	4(L1+L3+H1+H2)	IV/44	
220.11001	Ls1+Ls3+3Hs	IV/44	
220.11002	Ls1+Ls3+3Hs	IV/44	
200.01154	4(L1+L3+H1+H2)	IV/44	
200.68600	4(L1+L3+H1+H2)	IV/44	
300.11156	1pcs	IV/39	
310.11226	4pcs	IV/41	

A-A

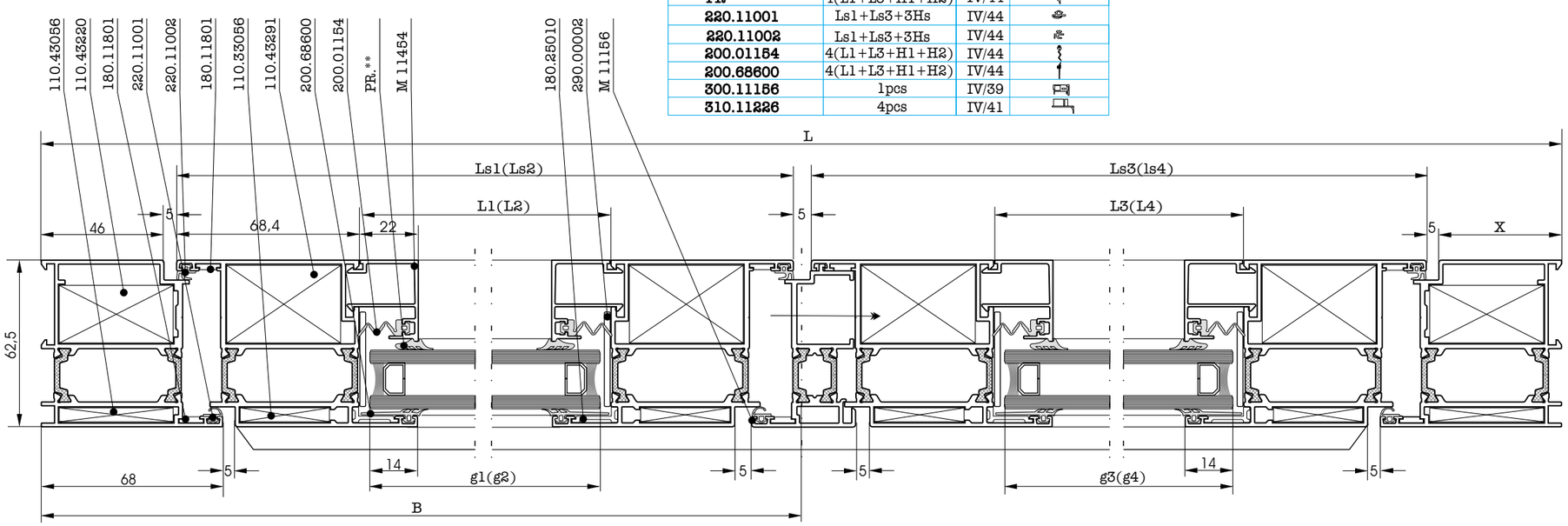

B-B

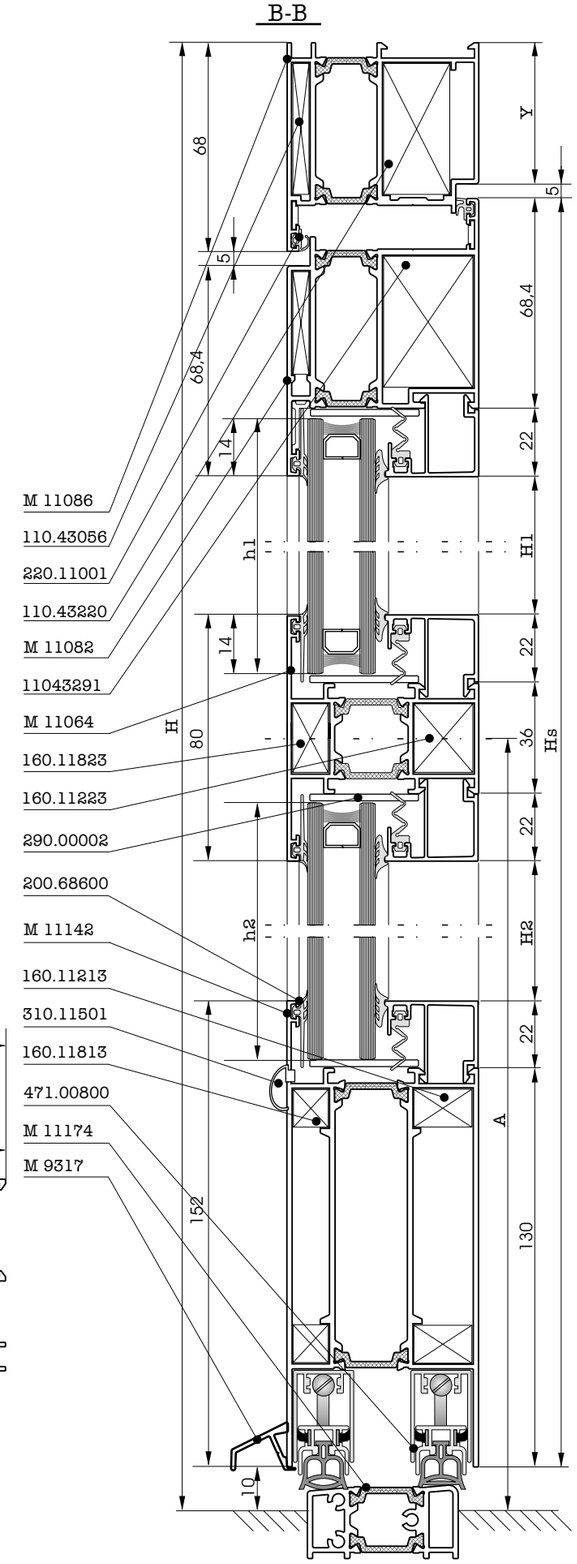

NOTE:
This example is for the frame M11086.For the other frames(M11088,M11286 and M11288) the calculations with sash M11082 are the same.
The dimension (Hap) for the profile M11156, depends on the height of the cap.

Inside opening door

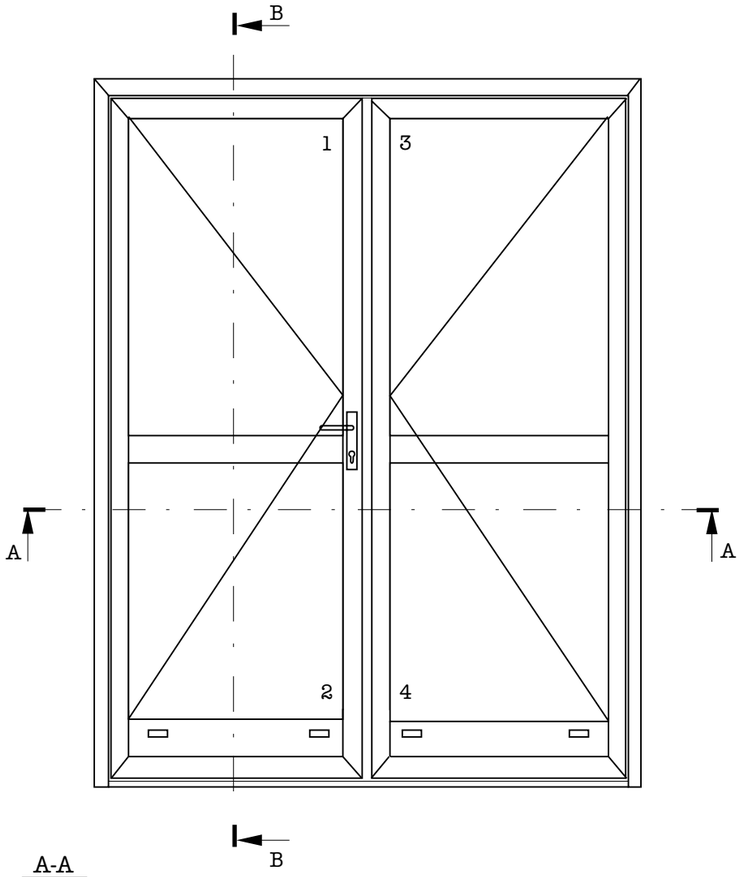

Profile		Cut	Quantity (pcs)	Dimensions (mm)	Page
M11086			1pcs	L	III/32
			1pcs	H	III/32
			1pcs	H	III/32
M11082			2pcs	Ls1=B-53,5	III/33
			2pcs	Ls2=L-B-53,5	III/33
			2pcs	Hs=H-57	III/33
			2pcs	Hs=H-57	III/33
M11144			1pcs	Lsp2=B-190,3	III/32
			1pcs	Lsp4=L-B-190,3	III/32
M11274			1pcs	Ltf=L-74,4	III/54
M11156			1pcs	Hap=Hs-20	III/46
M9317			1pcs	Ls2	III/52
			1pcs	Ls4	III/52
M11064			1pcs	Lt1=B-190,3	III/37
			1pcs	Lt2=L-B-190,3	III/37
M11454			4pcs	L1=B-190,3	III/64
			4pcs	L2=L-B-190,3	III/64
			4pcs	H1=H-A-181,4	III/64
			4pcs	H2=A-187,8	III/64

Accessories	Quantity (pcs,m)	Page	View
110.43056	2pcs	IV/05	
110.43220	2pcs	IV/05	
110.43295	8pcs	IV/05	
110.33056	8pcs	IV/05	
160.11823	4pcs	IV/18	
160.11223	4pcs	IV/18	
180.11801	10pcs	IV/11	
180.25010	12pcs	IV/18	
190.00002	12pcs	IV/50	
310.11501	4pcs	IV/**	
250.11226	L	IV/44	
PR-**	4(L1+L3+H1+H2)	IV/44	
220.11001	Ls1+Ls3+3Hs	IV/44	
220.11002	2(Ls1+Ls3)+3Hs	IV/44	
200.01154	4(L1+L3+H1+H2)	IV/44	
200.68600	4(L1+L3+H1+H2)	IV/44	
300.11156	1pcs	IV/39	
310.11274	2pcs	IV/41	
310.11082	2pcs	IV/41	
310.11226	4pcs	IV/41	

Glass sizes
g1=B-206,3
h1=H-A-153,4
g2=B-206,3
h2=A-159,8
g3=L-B-206,3
h3=H-A-153,4
g4=L-B-206,3
h4=A-159,8

B-B

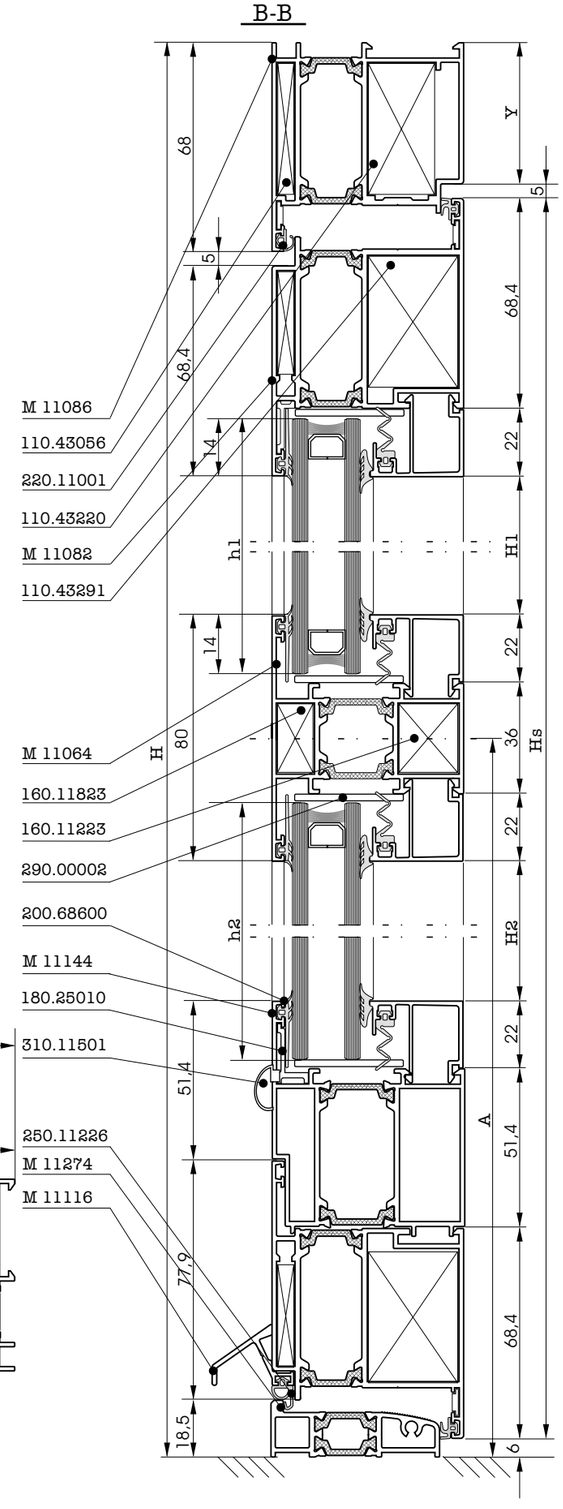

A-A

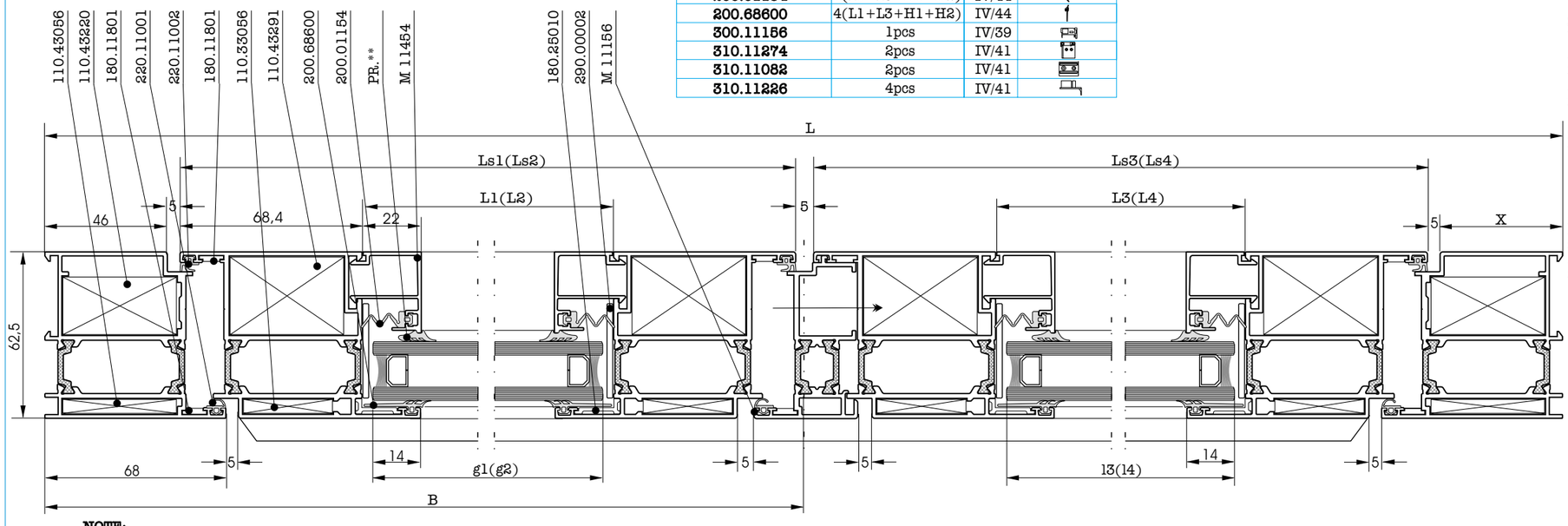

NOTE:
This example is for the frame M11086.For the other frames(M11088,M11286 and M11288) the calculations with sash M11082 are the same.
The dimension (Hap) for the profile M11156, depends on the height of the cap.

Outside opening door

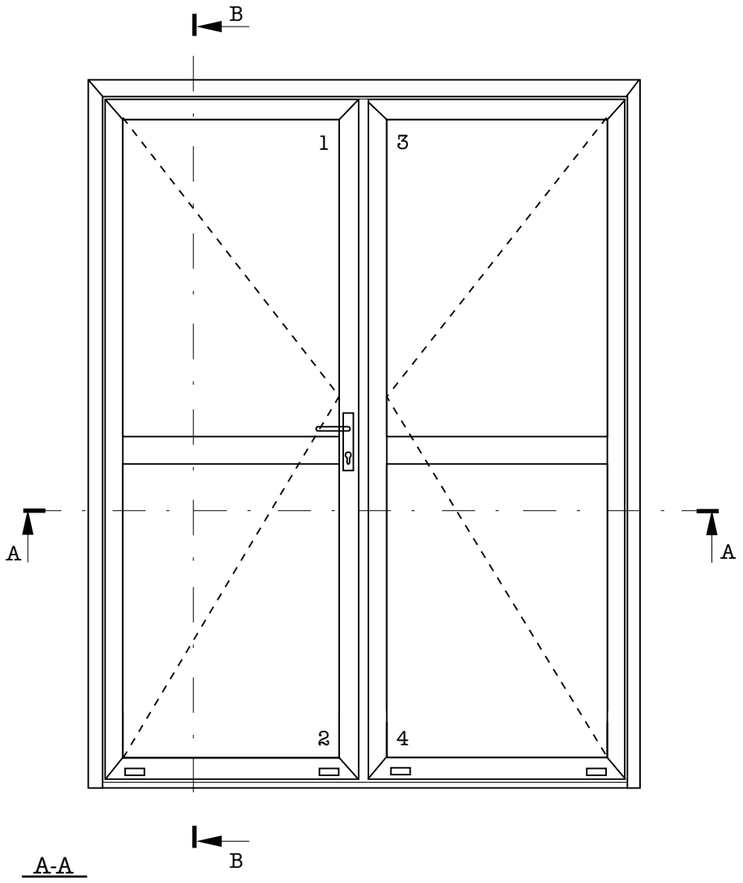

Profile		Cut	Quantity (pcs)	Dimensions (mm)	Page
M11088			1pcs	L	III/32
			1pcs	H	III/32
			1pcs	H	III/32
M11084			2pcs	Ls1=B-53,5	III/33
			2pcs	Ls3=L-B-53,5	III/33
			2pcs	Hs=H-66	III/33
			2pcs	Hs=H-66	III/33
M11172			1pcs	Ltf=Ls1+Ls2+1	III/54
M11170			1pcs	Lap=Ls1	III/53
			1pcs	Lap=Ls3	III/53
M11158			1pcs	Hap=Hs-20	III/47
M9317			1pcs	Ls2	III/52
			1pcs	Ls4	III/52
M11064			1pcs	Lt1=B-190,3	III/37
			1pcs	Lt2=H-B-190,3	III/37
M11454			4pcs	L1=B-190,3	III/64
			4pcs	L2=L-B-190,3	III/64
			4pcs	H1=H-A-181,4	III/64
			4pcs	H2=A-145,4	III/64

Glass sizes
g1=B-206,3
h1=H-A-153,4
g2=L-B-206,3
h2=A-117,4
g3=B-206,3
h3=H-A-153,4
g4=L-B-206,3
h4=A-117,4

Accessories	Quantity (pcs,m)	Page	View
110.43295	2pcs	IV/05	
110.33056	2pcs	IV/05	
110.43220	8pcs	IV/05	
110.43056	8pcs	IV/05	
160.11823	2pcs	IV/18	
160.11223	2pcs	IV/18	
110.25005	8pcs	IV/18	
180.11801	10pcs	IV/11	
290.00002	12pcs	IV/50	
310.11501	4pcs	IV/**	
620.02012	2(Ls1+Ls3)	IV/45	
PR.**	4(L1+L3+H1+H2)	IV/44	
220.11001	Ls1+Ls3+3Hs	IV/44	
220.11002	Ls1+Ls3+3Hs	IV/44	
200.01154	4(L1+L3+H1+H2)	IV/44	
200.68600	4(L1+L3+H1+H2)	IV/44	
300.11158	1pcs	IV/39	
300.11226	4pcs	IV/41	
310.11170	4pcs	IV/40	

A-A

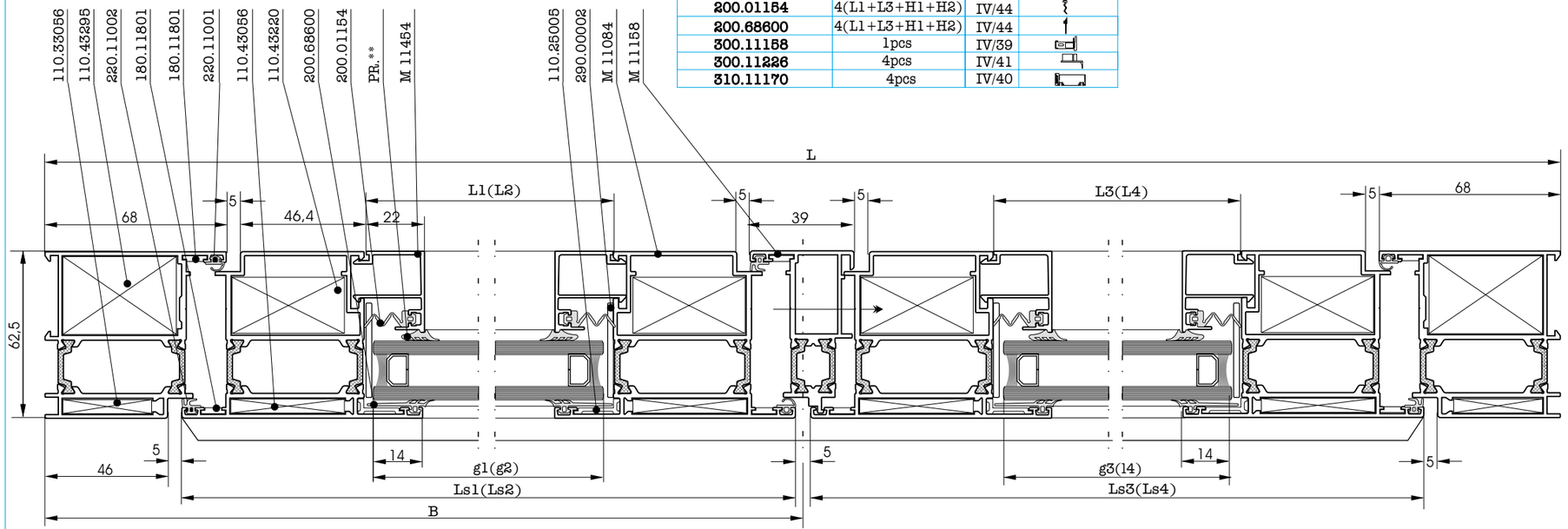

B-B

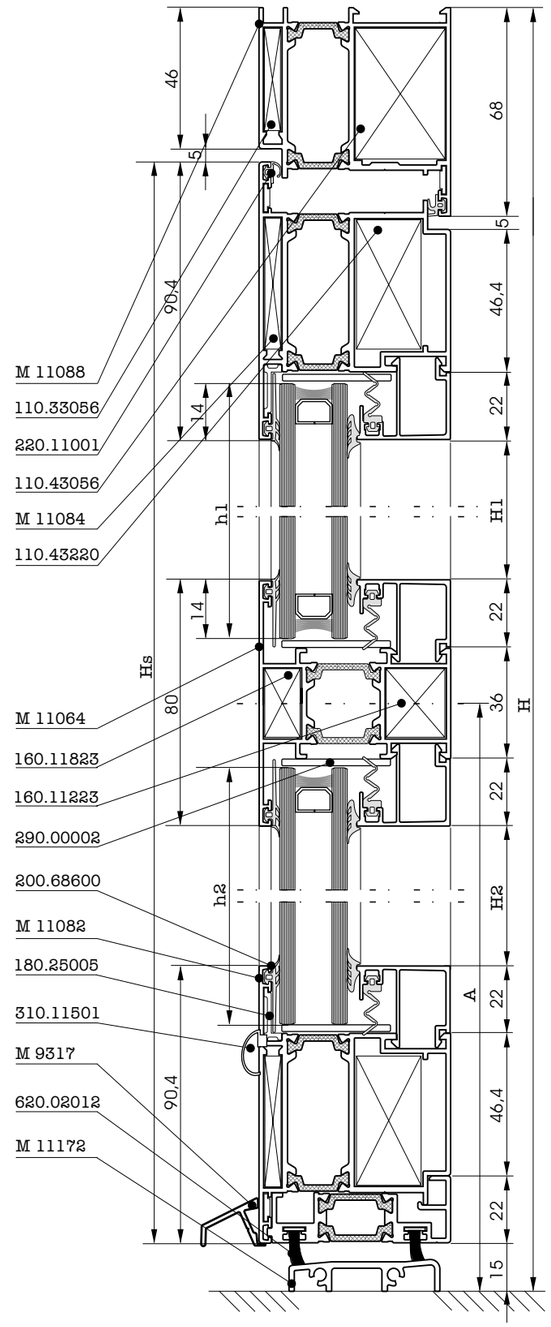

NOTE:
This example is for the frame M11086.For the other frames(M11088,M11286 and M11288) the calculations with sash M11082 are the same.
The dimension (Hap) for the profile M11156, depends on the height of the cap.

Outside opening door

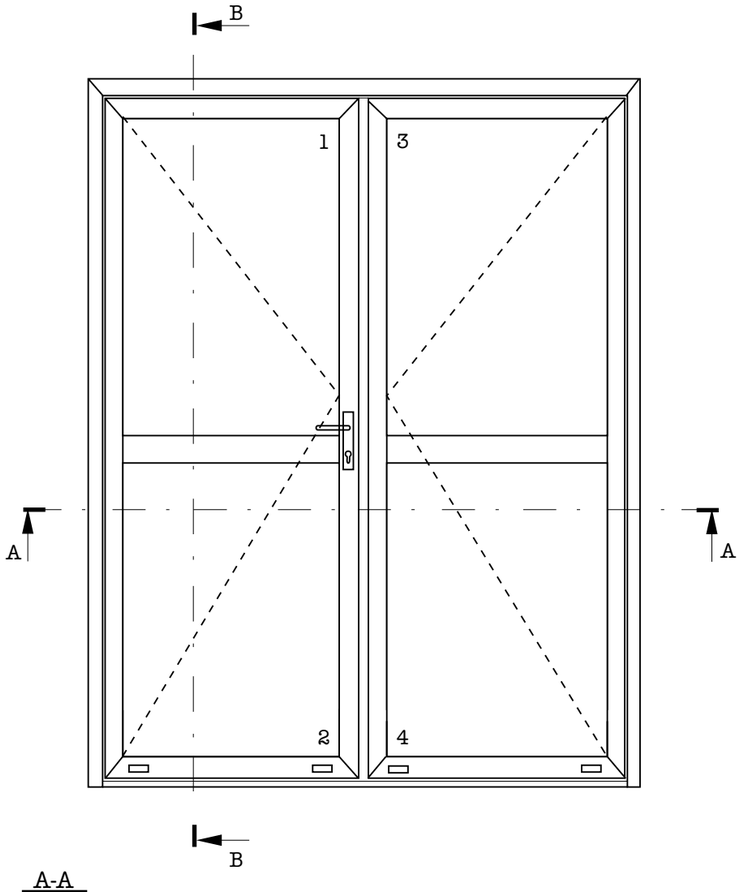

Profile		Cut	Quantity (pcs)	Dimensions (mm)	Page
M11014			1pcs	L	III/32
			1pcs	H	III/32
			1pcs	H	III/32
M11190			2pcs	Ls1=B-42,5	III/29
			2pcs	Ls3=L-B-42,5	III/29
			2pcs	Hs=L-55	III/29
			2pcs	Hs=L-55	III/29
M11058			1pcs	Hs=H-81	III/44
M11172			1pcs	Ltf=Ls1+Ls2+1	III/54
M11270			1pcs	Lap2=Ls1	III/53
			1pcs	Lap4=Ls3	III/53
M9317			1pcs	Ls1	III/52
			1pcs	Ls3	III/52
M11064			1pcs	Lt1=B-190,7	III/37
			1pcs	Lt3=L-B-190,7	III/37
M11454			4pcs	L1=B-190,7	III/64
			2pcs	L2=L-B-190,7	III/64
			2pcs	H1=H-A-176,1	III/64
			2pcs	H2=A-150,9	III/64

Glass sizes
g1=B-206,7
h1=H-A-148,1
g2=B-206,7
h2=A-122,9
g3=B-206,7
h3=H-A-148,1
g4=L-B-206,7
h4=A-122,9

Accessories	Quantity (pcs,m)	Page	View
110.33196	2pcs	IV/05	
110.33121	2pcs	IV/05	
110.43251	10pcs	IV/05	
110.33156	10pcs	IV/05	
160.11823	4pcs	IV/18	
160.11223	4pcs	IV/18	
180.25010	2pcs	IV/12	
180.25017	8pcs	IV/12	
180.20010	8pcs	IV/14	
290.00002	12pcs	IV/50	
310.11501	4pcs	IV/**	
620.02012	2(Ls1+Ls3)	IV/45	
PR.**	4(L1+L3+H1+H2)	IV/44	
220.11001	Ls1+Ls3+3Hs	IV/44	
220.11002	Ls1+Ls3+3Hs	IV/44	
200.01154	4(L1+L3+H1+H2)	IV/44	
200.68600	4(L1+L3+H1+H2)	IV/44	
210.11000	Ls1+Ls3+3Hs	IV/44	
300.11058	1pcs	IV/38	
300.11226	4pcs	IV/41	
310.11270	4pcs	IV/40	

A-A

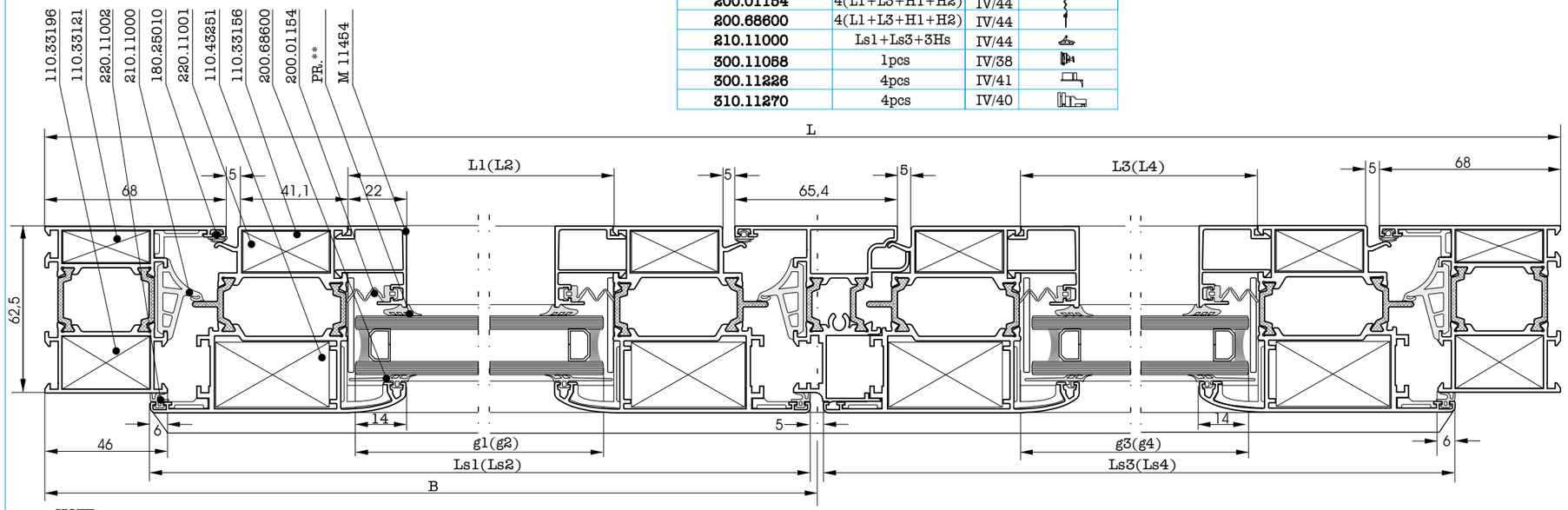

B-B

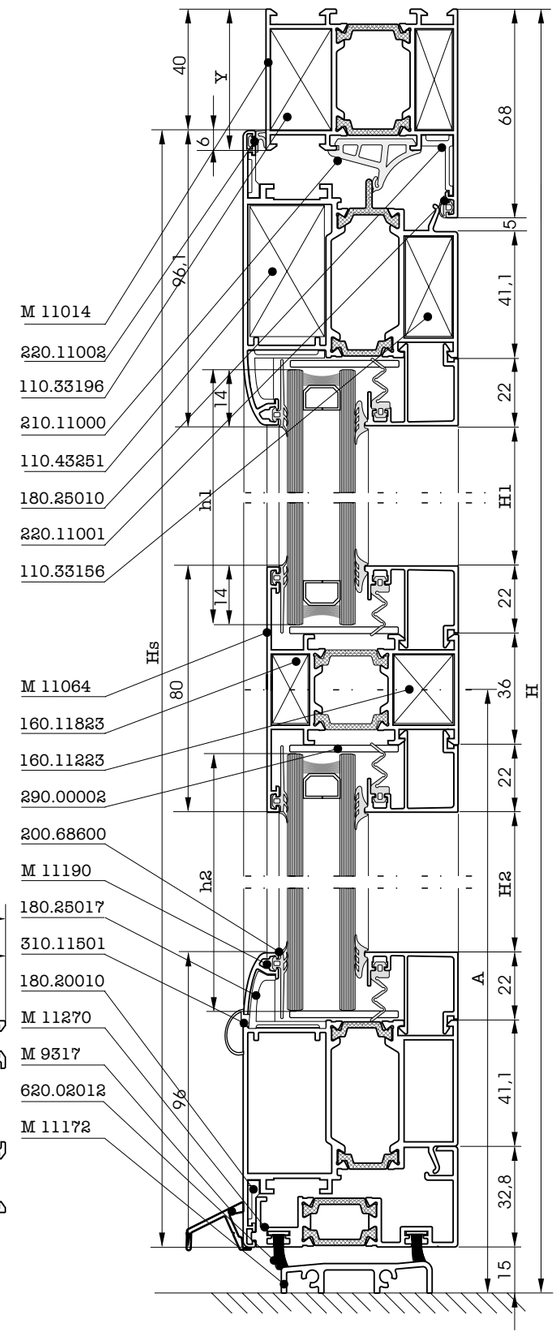

NOTE:
This example is for the frame M11014.To calculate for a different frame please use the following formulaes: **Ls1=B-X+3,5**
Ls3=L-B-X+3,5
Hs=H-9-Y

Inside opening door and fixed frame

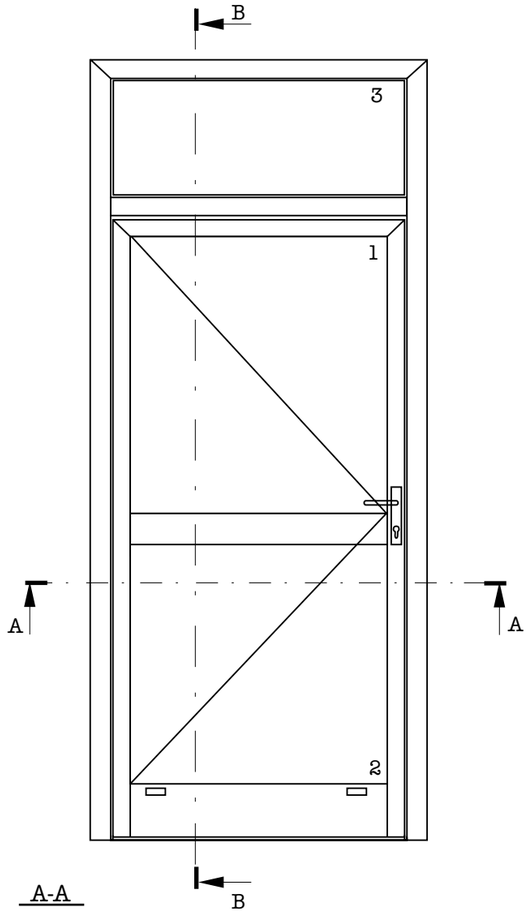

Profile		Cut	Quantity (pcs)	Dimensions (mm)	Page
M11014			1pcs	L	III/11
			1pcs	H	III/11
			1pcs	H	III/11
M11038			1pcs	Ls=L-80	III/21
			1pcs	Hs=C-22	III/21
			1pcs	Hs=C-22	III/21
M11142			1pcs	Lkp=L-228	III/19
M11174			1pcs	Ltf=L-92	III/54
M9317			1pcs	Ls	III/52
M11064			1pcs	Lt1=L-228	III/37
			1pcs	Lt3=L-92	III/37
M11454			2pcs	L1=L-272	III/64
			2pcs	L3=L-92	III/64
			2pcs	H1=C-A-148	III/64
			2pcs	H2=A-192	III/64
			4pcs	H3=H-C-108	III/64

Glass sizes
g1=L-244
h1=C-A-120
g2=L-244
h2=A-174
g3=L-92
h3=H-C-80

Accessories	Quantity (pcs,m)	Page	View
110.33196	2pcs	IV/05	
110.33121	2pcs	IV/05	
110.33156	2pcs	IV/05	
110.43270	2pcs	IV/05	
180.25010	2pcs	IV/12	
110.25150	2pcs	IV/12	
180.20010	2pcs	IV/14	
160.11813	2pcs	IV/18	
160.11213	2pcs	IV/18	
160.11823	4pcs	IV/18	
160.11223	4pcs	IV/18	
290.00002	6pcs	IV/50	
310.11501	2pcs	IV/**	
471.00800	2pcs	IV/47	
PR-**	2(2L1+L3+H1+H2+H3)	IV/44	
220.11001	Ls+2Hs	IV/44	
220.11002	Ls+2Hs	IV/44	
200.01154	2(2L1+L3+H1+H2+H3)	IV/44	
200.68600	2(2L1+L3+H1+H2+H3)	IV/44	
210.11000	Ls+Hs	IV/44	
300.11226	4pcs	IV/41	

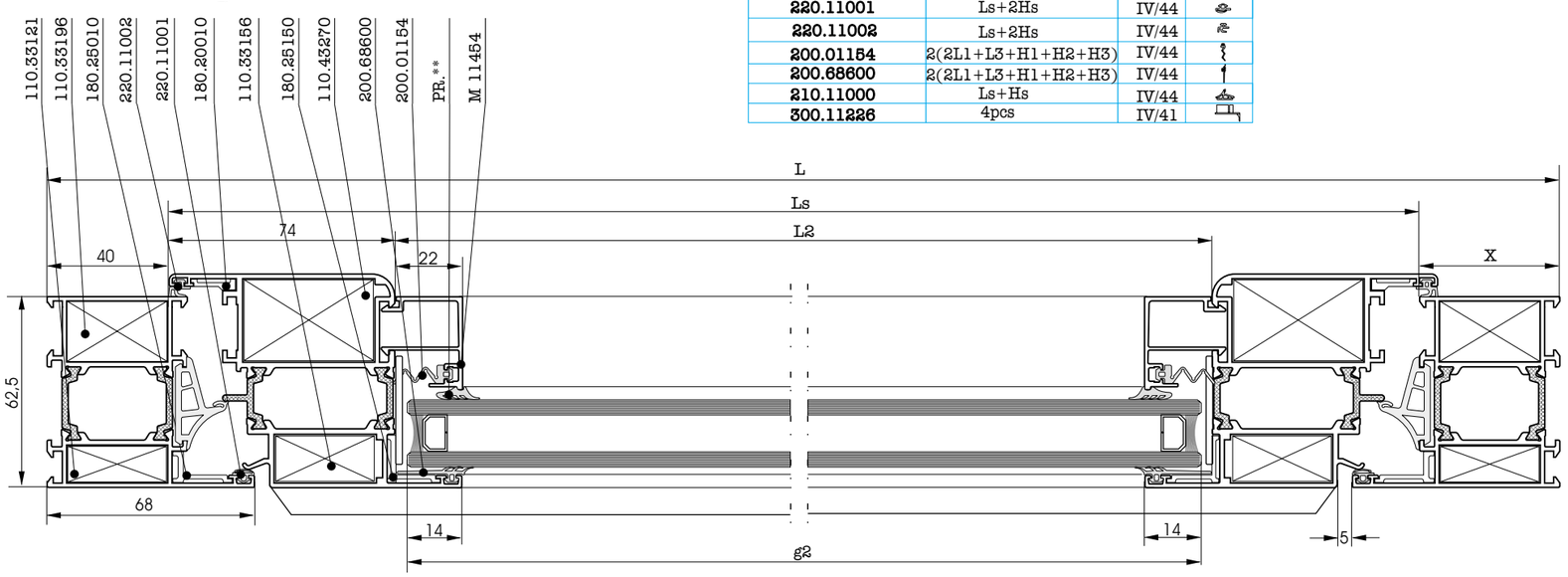

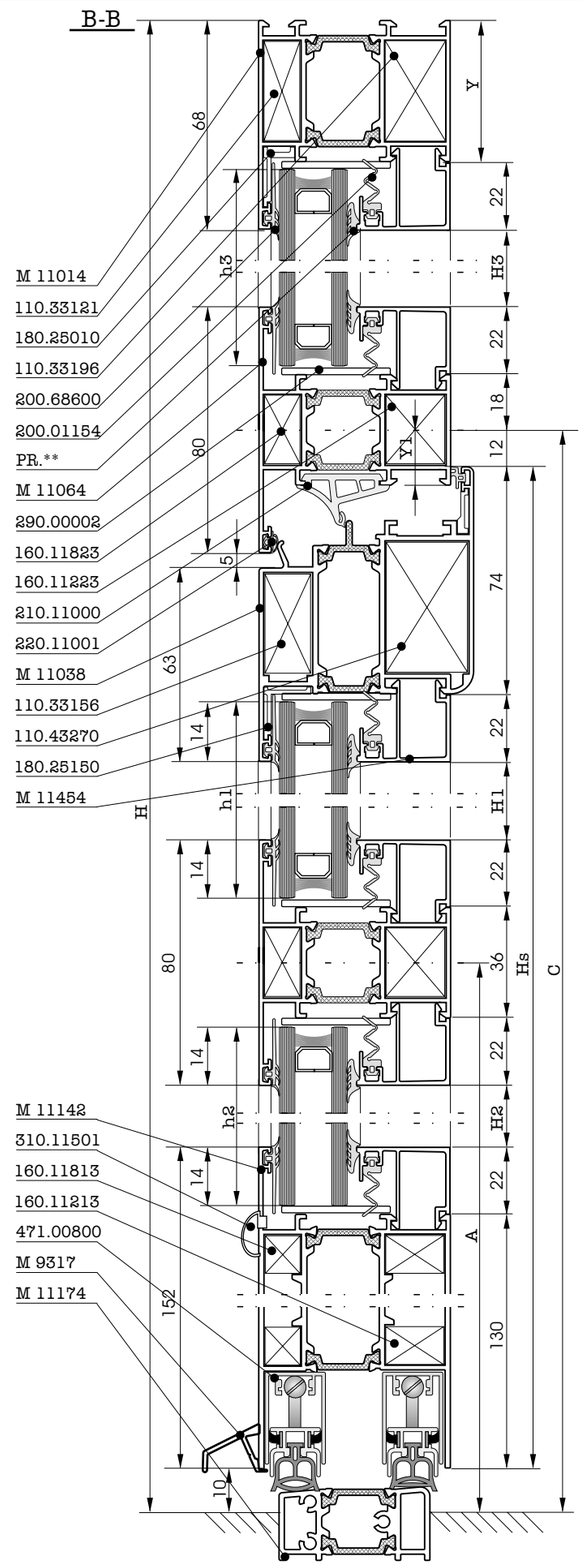

NOTE:
This example is for the frame M11014.To calculate for a different frame please use the following formulaes: **Ls=L-2X+12**
Hs=C-Y1-4

Outside opening door and fixed frame

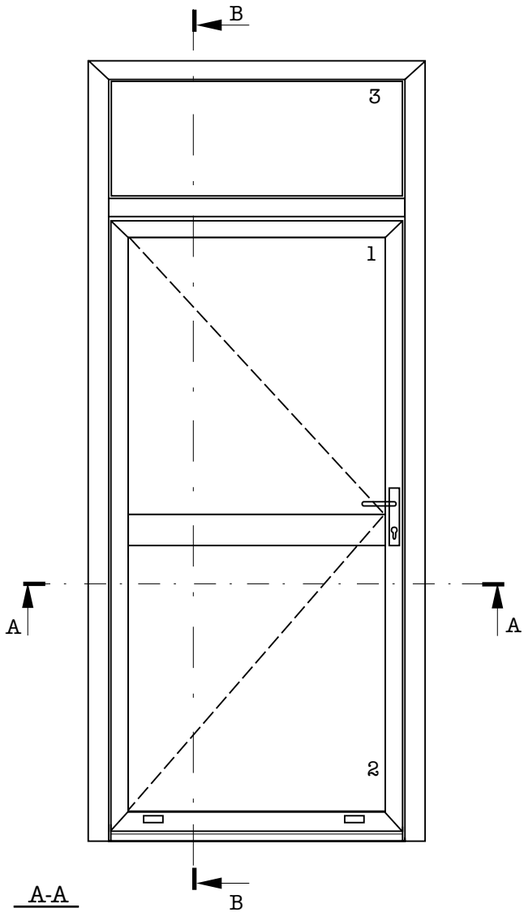

A-A

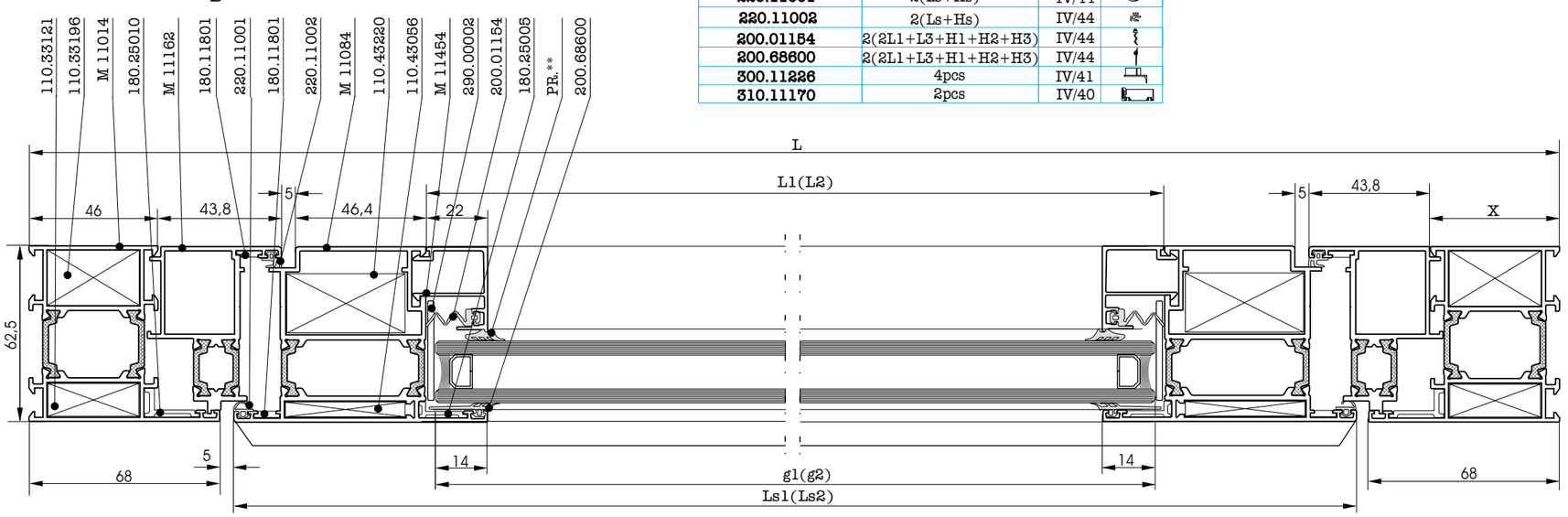

Profile		Cut	Quantity (pcs)	Dimensions (mm)	Page
M11014			1pcs	L	III/11
			1pcs	H	III/11
			1pcs	H	III/11
M11084			1pcs	Ls=L-146	III/33
			1pcs	Hs=C-60	III/33
			1pcs	Hs=C-60	III/33
M11162			1pcs	Lsp=L-82,2	III/47
			1pcs	Hsp=C-26,1	III/47
			1pcs	Hsp=C-26,1	III/47
M11172			1pcs	Ltf=Ls	III/54
M11170			1pcs	Lap=Ls-4	III/53
M9317			1pcs	Ls	III/52
M11064			1pcs	Lt1=L-282,4	III/37
			1pcs	Lt3=L-92	III/37
M11454			2pcs	L1=L-282,4	III/64
			2pcs	L3=L-92	III/64
			2pcs	H1=C-A-175,2	III/64
			2pcs	H2=A-145,4	III/64
			4pcs	H3=H-C-108	III/64

Glass sizes
g1=L-298,4
h1=C-A-147,2
g2=L-298,4
h2=A-117,4
g3=L-92
h3=H-C-80

Accessories	Quantity (pcs,m)	Page	View
110.33196	2pcs	IV/05	
110.33121	2pcs	IV/05	
110.43056	4pcs	IV/05	
110.43220	4pcs	IV/05	
180.25010	2pcs	IV/12	
180.25005	4pcs	IV/12	
180.11801	6pcs	IV/11	
160.11823	4pcs	IV/18	
160.11223	4pcs	IV/18	
290.00002	4pcs	IV/50	
310.11501	2pcs	IV/**	
620.02123	2Ls	IV/45	
PR.**	2(2L1+L3+H1+H2+H3)	IV/44	
220.11001	2(Ls+Hs)	IV/44	
220.11002	2(Ls+Hs)	IV/44	
200.01154	2(2L1+L3+H1+H2+H3)	IV/44	
200.68600	2(2L1+L3+H1+H2+H3)	IV/44	
300.11226	4pcs	IV/41	
310.11170	2pcs	IV/40	

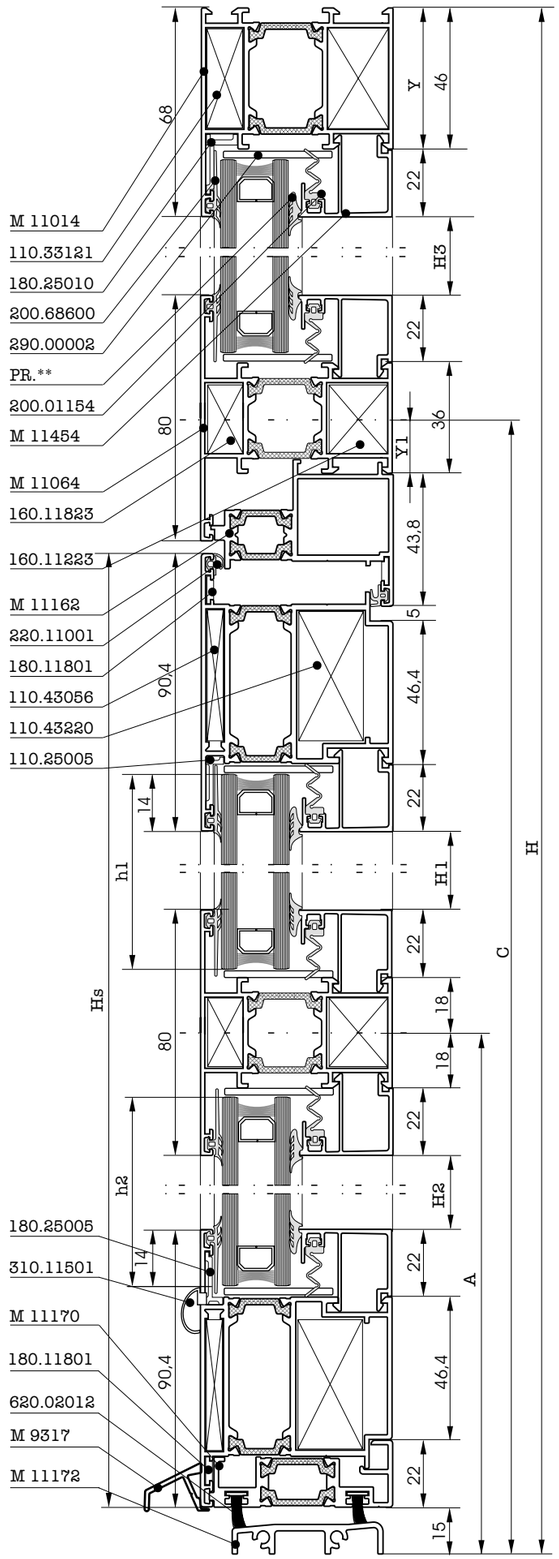

NOTE:
This example is for the frame M11014.To calculate for a different frame please use the following formulaes: **Ls=L-2X+54**
Hs=C-Y1-42

Inside opening double door with fixed part and window

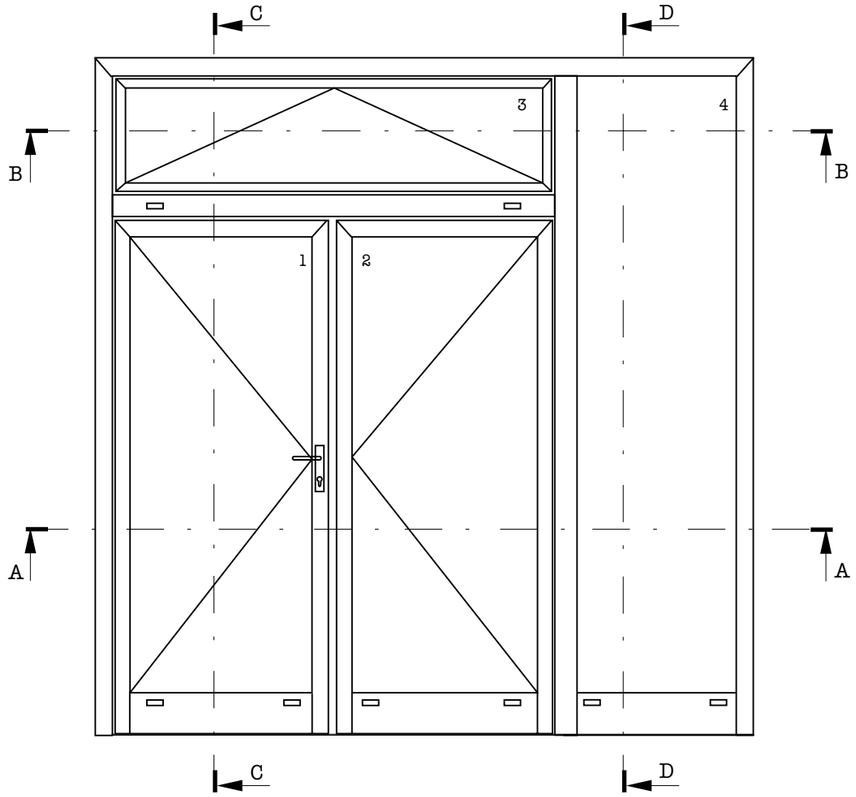

B-B

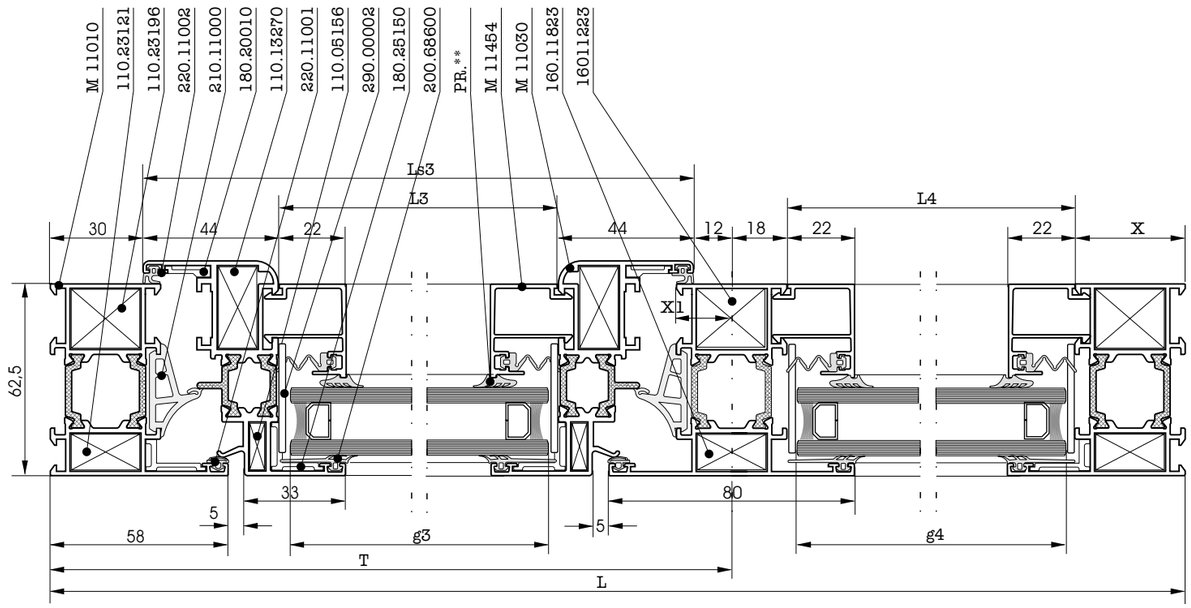

A-A

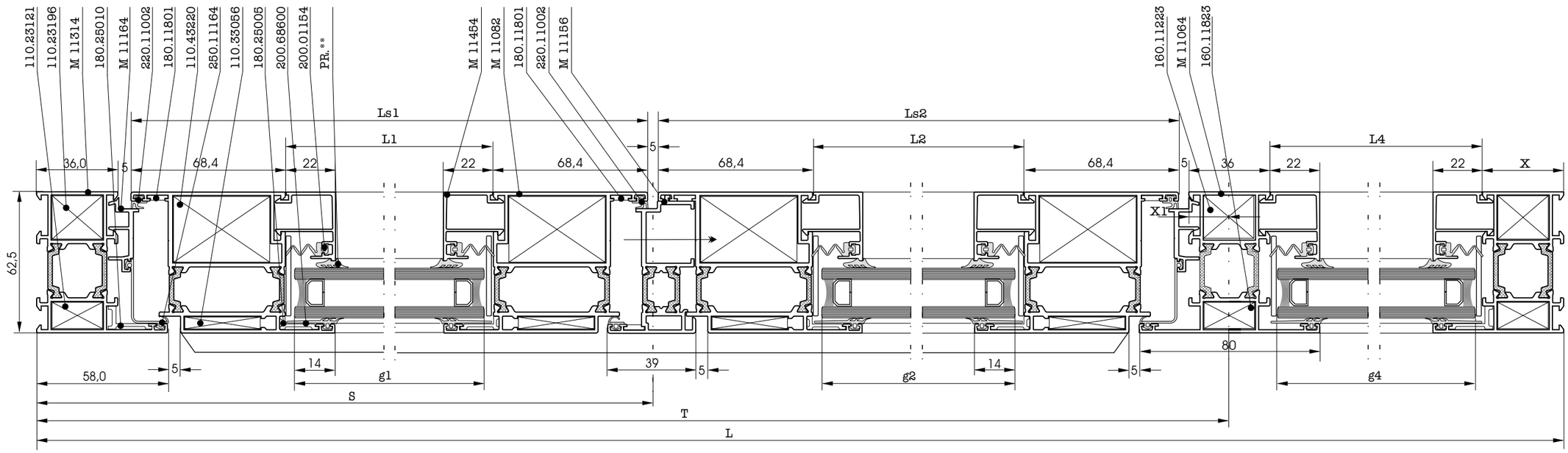

Inside opening double door with fixed part and window

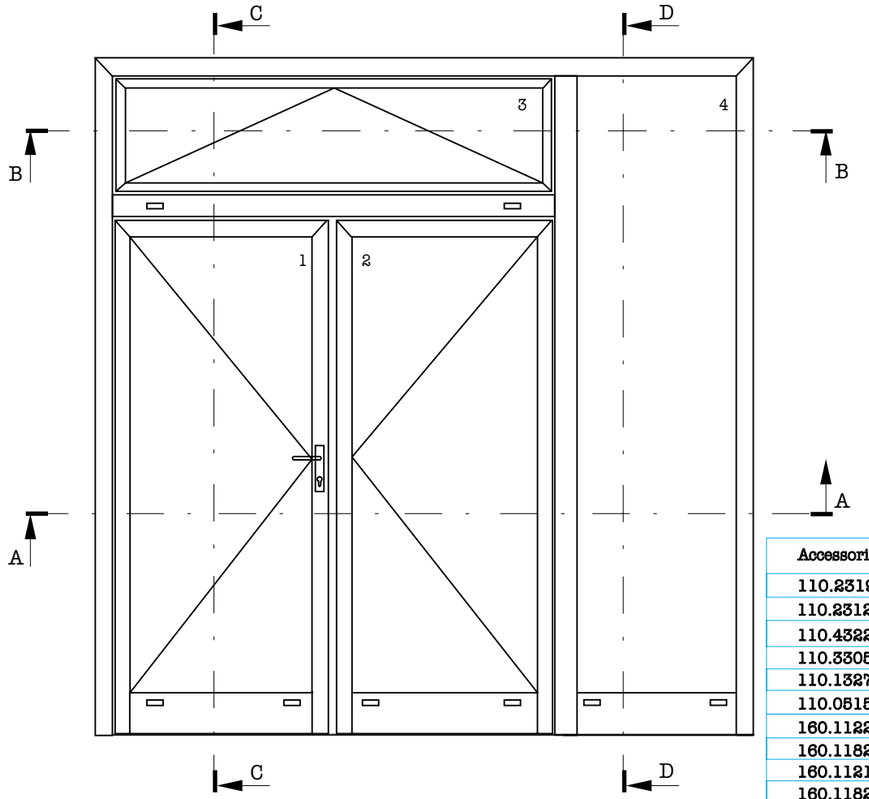

Accessories	Quantity (pcs,m)	Page	View
110.23196	2pcs	IV/04	
110.23121	2pcs	IV/04	
110.43220	4pcs	IV/05	
110.33056	4pcs	IV/05	
110.13270	4pcs	IV/04	
110.05156	4pcs	IV/04	
160.11223	4pcs	IV/18	
160.11823	4pcs	IV/18	
160.11213	6pcs	IV/18	
160.11823	6pcs	IV/18	
180.25010	3pcs	IV/12	
180.25005	4pcs	IV/11	
180.25150	4pcs	IV/12	
180.11801	5pcs	IV/11	
180.20010	4pcs	IV/14	
250.11164	2Hs1+Ls1+Ls2	IV/44	
310.11501	8pcs	IV/**	
250.11170	Ltf	IV/44	
290.00002	16pcs	IV/50	
210.11000	2(Ls3+Hs3)	IV/44	
220.11001	Ls1+Ls2+3Hs1+2(Ls3+Hs3)	IV/44	
220.11002	Ls1+Ls2+3Hs1+2(Ls3+Hs3)	IV/44	
PR.**	2(L1+L2+L3+2H1+H3)	IV/44	
200.01154	2(L1+L2+L3+2H1+H3)	IV/44	
200.68600	2(L1+L2+L3+2H1+H3)	IV/44	
250.11270	Ltf	IV/44	
300.11226	8pcs	IV/41	
300.11156	1pcs	IV/39	

Profile		Cut	Quantity (pcs)	Dimensions (mm)	Page
M11010			1pcs	L	III/11
			1pcs	H	III/11
			1pcs	H	III/11
M11082			1pcs	Ls1=S-43,5	III/33
			1pcs	Ls2=T-S-25,5	III/33
			2pcs	Hs1=A-33	III/33
			2pcs	Hs2=A-33	III/33
M11030			2pcs	Ls3=T-42	III/21
			2pcs	Hs3=H-A-42	III/21
M11342			1pcs	Lkp1=S-180,3	III/20
			1pcs	Lkp2=T-S-162,3	III/20
M11156			1pcs	Hap=A-8	III/46
M9317			1pcs	Ls1	III/52
			1pcs	Ls2	III/52
			1pcs	Ls3	III/52
			1pcs	L4=L-T-54	III/52
M11064			1pcs	Lt3=T-54	III/37
			1pcs	Ht4=H-36	III/37
M11454			2pcs	L1=S-180,3	III/64
			2pcs	L2=T-S-162,3	III/64
			2pcs	L3=T-130	III/64
			2pcs	L4=L-T-54	III/64
			4pcs	H1=A-260,4	III/64
			2pcs	H3=H-A-174	III/64
			2pcs	H4=H-225	III/64
M11164			1pcs	Lap=T-44	III/50
			1pcs	Hap1=A-23	III/50
			1pcs	Hap2=A-23	III/50
M11174			1pcs	Ltf=T-54	III/54

Profile		Cut	Quantity (pcs)	Dimensions (mm)	Page
M11262			1pcs	Lf=L-T-54	III/14
M11210			2pcs	10mm	III/64
			2pcs	10mm	III/64
M11211			2pcs	10mm	III/64
			2pcs	10mm	III/64

Glass sizes
g1=S-196,3
h1=A-232,4
g2=T-S-178,3
h2=A-232,4
g3=T-146
h3=H-A-146
g4=L-T-70
h4=H-197

NOTE:
This example is for the frame M11010.To calculate for a different frame please use the following formulaes: **Ls1=S-X-7,5**
Ls2=T-S-X1-7,5
Ls3=T-X-X1+12
Hs1=Hs2=A-Y1-15
Hs3=H-A-Y1-Y+12

D-D

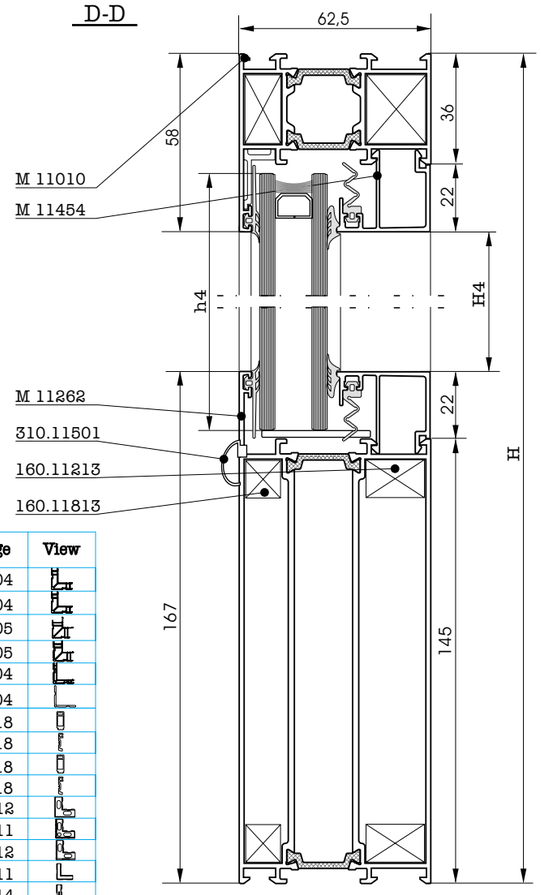

C-C

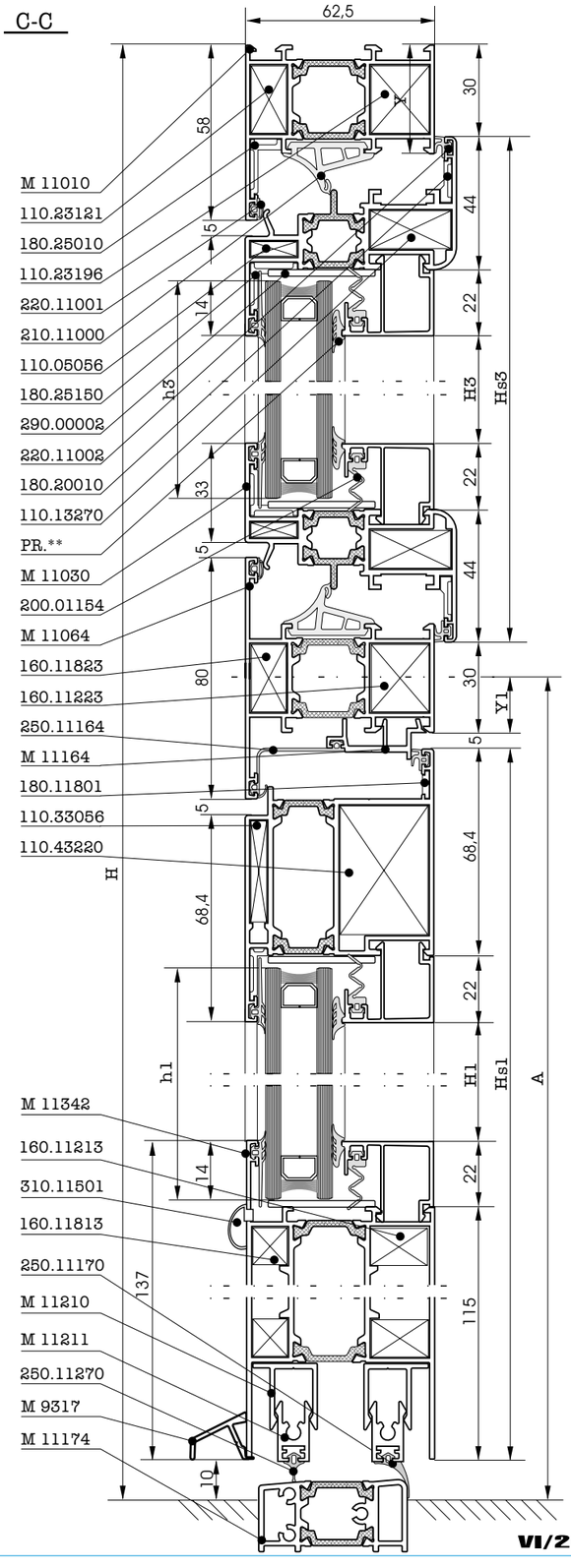

Outside opening double door with fixed part and window

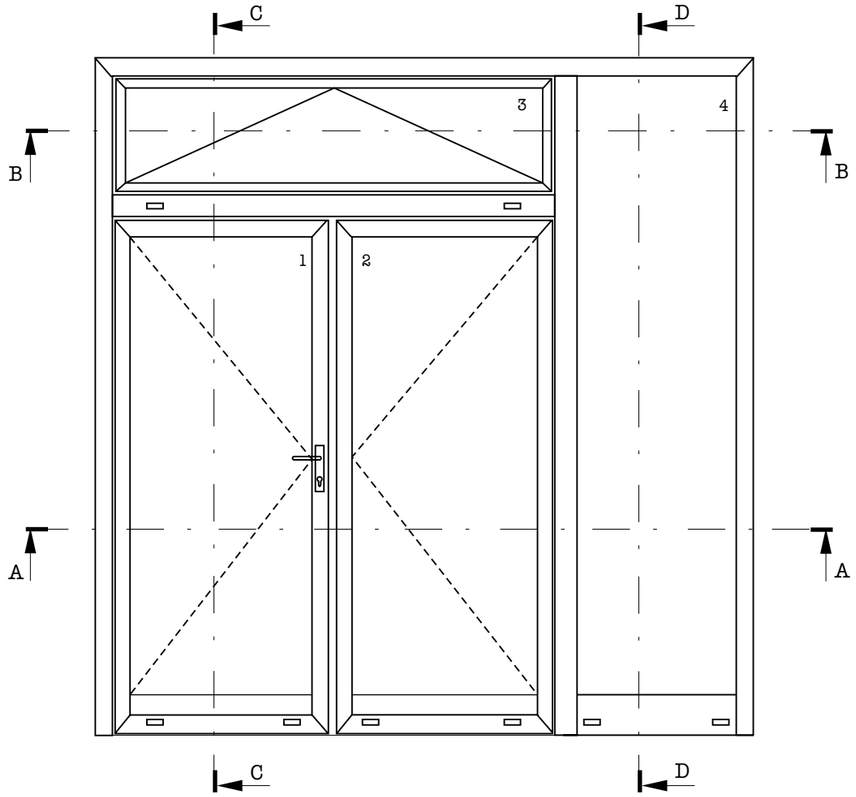

B-B

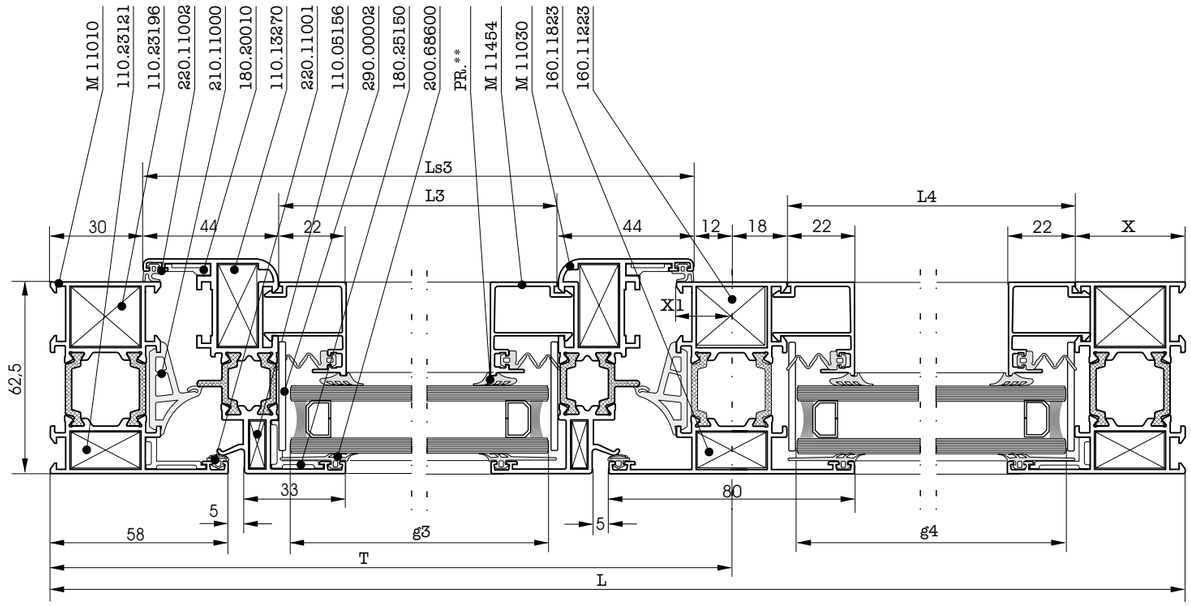

A-A

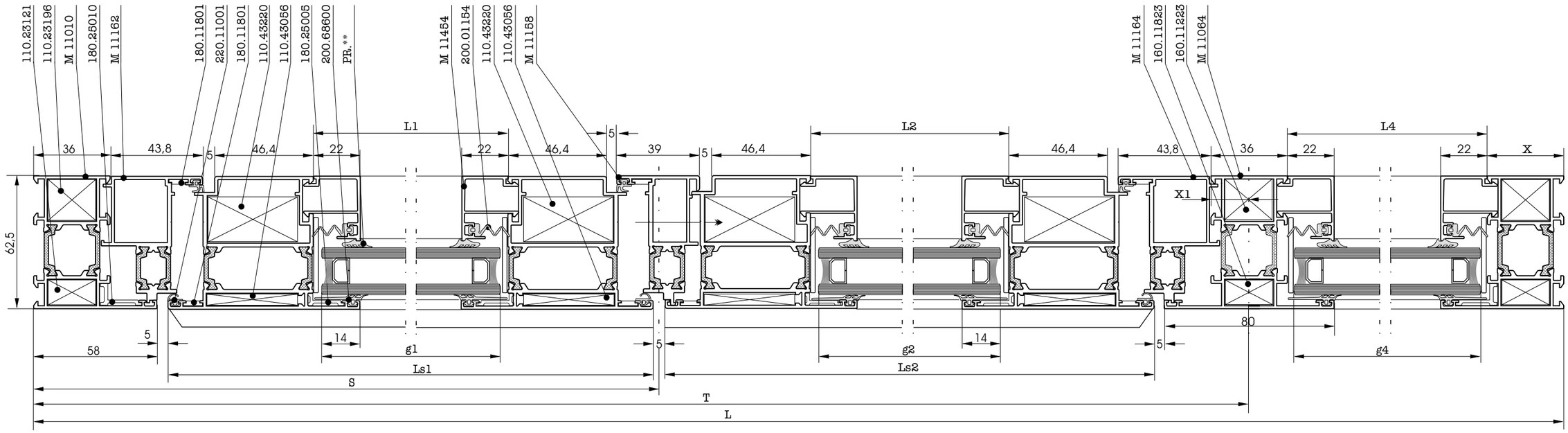

Outside opening double door with fixed part and window

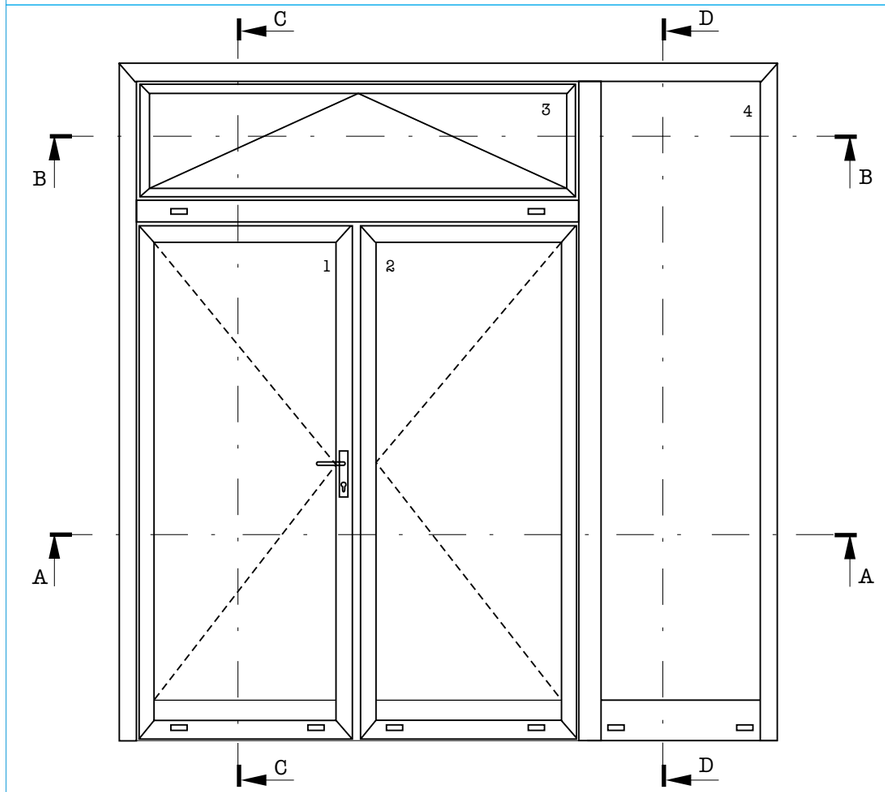

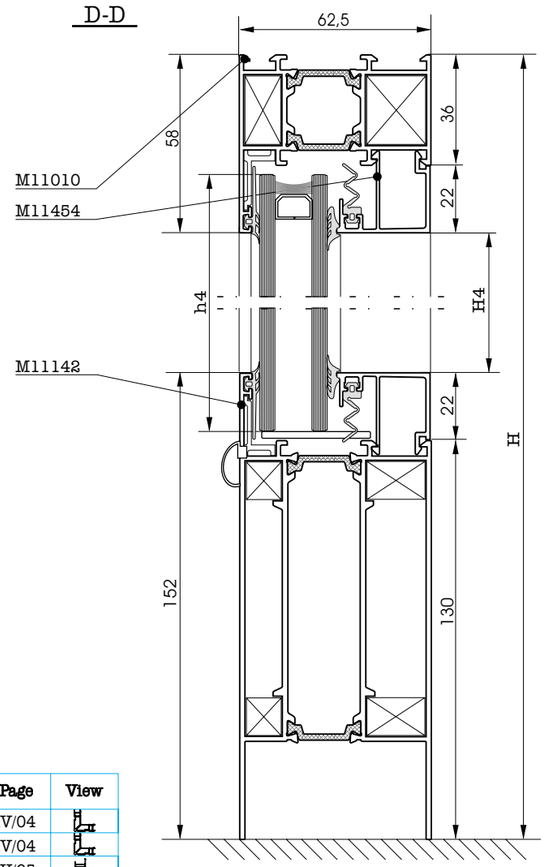

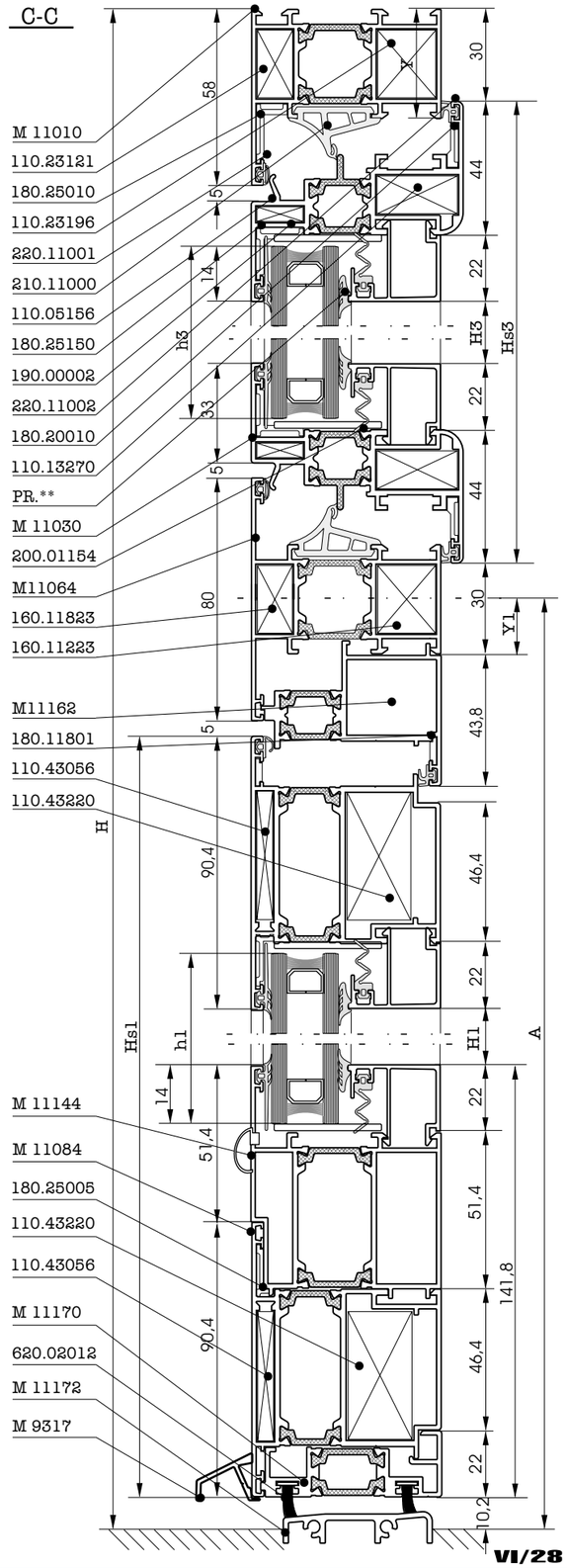

Profile		Cut	Quantity (pcs)	Dimensions (mm)	Page
M11010			1pcs	L	III/11
			1pcs	H	III/11
			1pcs	H	III/11
M11084			2pcs	Ls1=S-65,5	III/33
			2pcs	Ls2=T-S-47,5	III/33
			2pcs	Hs1=A-55,2	III/33
			2pcs	Hs2=A-55,2	III/33
M11030			2pcs	Ls3=T-42	III/21
			2pcs	Hs3=H-A-42	III/21
M11142			1pcs	Lkp=L-T-54	III/19
M11162			1pcs	Lsp=T-44,2	III/47
			1pcs	Hsp1=A-23,3	III/47
			1pcs	Hsp2=A-23,1	III/47
M9317			1pcs	Ls1	III/52
			1pcs	Ls2	III/52
M11064			1pcs	Lt3=T-54	III/37
			1pcs	Ht4=H-36	III/37
M11454			2pcs	L1=S-202,1	III/64
			2pcs	L2=T-S-184,1	III/64
			2pcs	L3=T-130	III/64
			2pcs	L4=L-T-54	III/64
			4pcs	H1=A-287,2	III/64
			2pcs	H3=H-A-174	III/64
			2pcs	H4=H-210	III/64
M11158			1pcs	Hap=A-8,2	III/47
M11172			1pcs	Ltf=T-54	III/54
M11170			1pcs	Lap=Ls1-4	III/53
			1pcs	Lap=Ls2-4	III/53
M11144			1pcs	Lsp=Ls1	III/32
			1pcs	Lsp=Ls2	III/32

Accessories	Quantity (pcs,m)	Page	View
110.23196	2pcs	IV/04	
110.23121	2pcs	IV/04	
110.43220	8pcs	IV/05	
110.43056	8pcs	IV/05	
110.13270	4pcs	IV/04	
110.05156	4pcs	IV/04	
160.11223	4pcs	IV/18	
160.11823	4pcs	IV/18	
160.11213	4pcs	IV/18	
160.11823	4pcs	IV/18	
180.25010	2pcs	IV/12	
180.25005	8pcs	IV/11	
180.25150	4pcs	IV/12	
180.11801	11pcs	IV/11	
180.20010	4pcs	IV/14	
310.11501	8pcs	IV/**	
300.11156	1pcs	IV/39	
290.00002	16pcs	IV/50	
210.11001	2(Ls3+Hs3)	IV/44	
220.11001	3Hs1+2(Ls1+Ls2+Hs3+Ls3)	IV/44	
220.11002	3Hs1+2(Ls1+Ls2+Hs3+Ls3)	IV/44	
PR.**	2(L1+L2+L3+2H1+H3)	IV/44	
200.01154	2(L1+L2+L3+2H1+H3)	IV/44	
200.68600	2(L1+L2+L3+2H1+H3)	IV/44	
310.11170	2pcs	IV/40	
300.11226	8pcs	IV/41	

Glass sizes
g1=S-218,3
h1=A-249
g2=T-S-200,3
h2=A-249
g3=T-146
h3=H-A-146
g4=L-T-70
h4=H-182

NOTE:
This example is for the frame M11010.To calculate for a different frame please use the following formulaes:

Ls1=S-X-29,5
Ls2=T-S-X1-29,5
Ls3=T-X-X1+12
Hs1=Hs2=A-Y1-37
Hs3=H-A-Y1-Y+12